CATALOGUE OF REPLACEMENT PARTS WITH INSTRUCTIONS FOR OPERATION AND CARE OF:

Model A-120
(SPECIFICATION No. 3940)

and

A-150 MIXER
(*All Specs.*)

THE HOBART MANUFACTURING CO.
TROY, OHIO, U. S. A.

Instructions for Operation and Care of Model A-120 Hobart Mixer

CONNECTIONS All machines except those for three phase current are furnished with a flexible cord and attachment plug. Before plugging into a socket the first time make sure that the current and voltage of the motor agree with those of your line. The electrical specifications of the motor are stamped upon the name plate attached to the left side of the case. The outlet 4 is tapped for ½" conduit, which may be substituted for the flexible cord if a more permanent installation is required. The planetary must revolve in the direction of the arrow in the illustration.

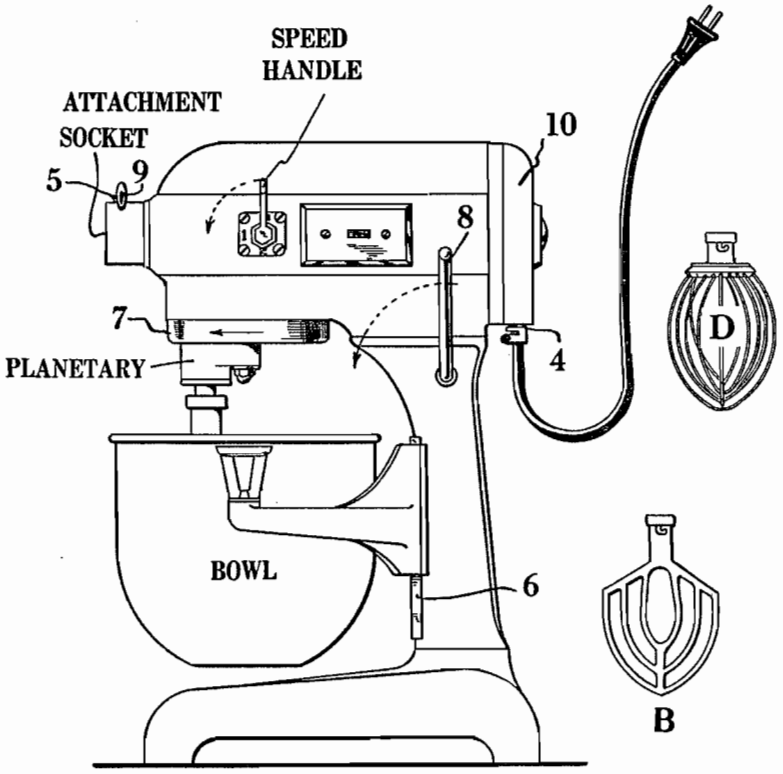

LUBRICATION The transmission gearing is packed with a special grease that will last for several years. When grease is needed for replacement it should be ordered from us. A small oiler at 5 is for lubricating attachments. Oil only when an attachment is in place and never use more than a drop or two. Lubricate the bowl slideways 6 occasionally by applying a very small amount of oil or grease with the tip of your finger. Only mineral oils are suitable for this type of lubrication. The polished drip cup 7 is a safeguard to prevent lubricant that might work out of the planetary gearing from dropping into the bowl. Take it off once a month and wipe it clean. To remove the drip cup, pull it straight down.

SPEED CONTROL If the load is moderate, speed can be changed by merely turning the speed handle to the desired number; if the load is heavy enough to make the handle turn hard, switch off the motor before changing speed. In the illustration the handle is set for number 3 or high speed. This speed is recommended for fast, light work such as whipping cream, beating eggs, and mixing thin batters. Number 1 or slow speed is for heavy mixtures, like breakfast rolls. It is also the proper speed for the meat chopper. In many mixing operations it is customary to start on number 1 and then change to a higher speed as the work progresses.

BOWL LIFT Pull the lever 8 forward to lower the bowl. It is necessary to lower the bowl in order to change beaters, and it makes the bowl more accessible for filling. When raising the bowl move the lever a little beyond the vertical center, until you feel it touch the stop. To mash potatoes, or to cream butter, start with the bowl down and raise it slowly into working position.

BEATERS The beaters illustrated in the illustration are as follows:

Style "B" is commonly used for thin batters, cakes, and for mashing potatoes.

(Continued on Page 8)

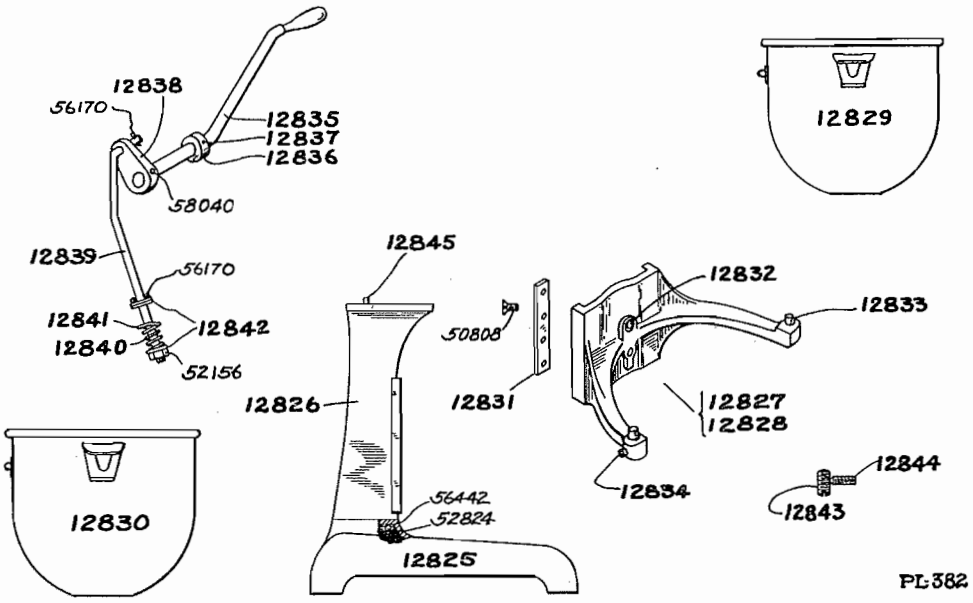

BASIC UNIT

Cat. No.	Part Name	No. Req.	Factory No.	Code Word
12 825	Base	1	T-12677	Bukse
12 826	Pedestal	1	T-12659	Bukug
12 827	Bowl Support for A-120	1	T-12758	Bukvh
12 828	Bowl Support for A-150	1	T-12660	Bukwi
12 829	12 Quart Bowl for A-120	1	S-12667	Bukyk
12 830	15 Quart Bowl for A-150	1	S-12668	Bukzl
12 831	Gib for Bowl Support	2	M-12715	Bulaz
12 832	Bushing for Bowl Retaining Pin	1	V-13297	Bulba
12 833	Bowl Locating Pin	2	V-6938	Buled
12 834	Stud for Ice Jacket Hook	2	V-5014	Bulfe
12 835	Lift Handle	1	P-12713	Bulih
12 836	Stop Collar for Lift Handle	1	V-12716	Bulji
12 837	Pin in Collar	1	P-11800-181	Bulon
12 838	Bowl Lift Arm	1	M-12685	Bulpo
12 839	Bowl Lift Rod	1	P-12714	Bults
12 840	Spring for Lift Rod	1	V-12782	Bulut
12 841	Special Washer for Lift Rod	1	V-12745	Bulvu
12 842	Washer, 13/32" x 1" x 1/16", under cotter pin	2	M-17000-6-33	Bulyx
12 843	Bowl Height Adjusting Screw, 7/16"-14 x ⅞" brass, oval Point	1	----------	Bulzy
12 844	5/16"-18 x 1-⅛" Cup Point Headless Brass Set Screw	1	----------	Buman
12 845	5/16" Dowel, case to pedestal	2	P-11800-116	Bumbo
12 846	Washer, 13/32" x ¾" x 1/16", under Nut No. 52156	1	M-17000-6-26	Bumer

Note'— Always give us the serial number of your machine.

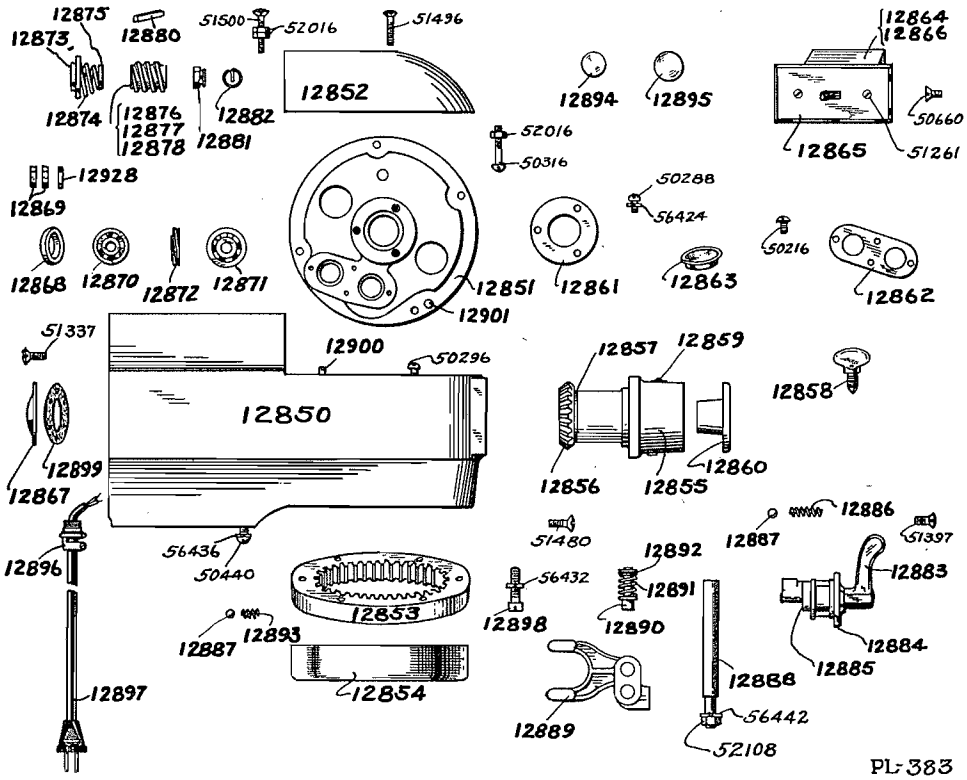

TRANSMISSION CASE UNIT

Cat. No	Part Name	No. Req.	Factory No.	Code Word
12 850	Transmission Case	1	T-12678	Bumoc
12 851	Transmission Shaft Support	1	S-12687	Bumqe
12 852	Transmission Case Cover, state finish	1	S-18231-1	Bumsg
12 853	Internal Gear, 56 Teeth	1	P-12682	Bumth
12 854	Drip Cup	1	P-12684	Bumui
12 855	Attachment Hub	1	R-12686	Bumym
12 856	Attachment Drive Bevel Pinion, 35 Teeth (Must have Serial No.)	1	P-18801	Buobp
12 857	Thrust Washer	1	V-12746	Buocq
12 858	Thumb Screw	1	M-4202-3	Buodr
12 859	Oiler, GB-524	1	------	Buoes
12 860	Cover for Attachment Socket	1	M-13678	Buoft
12 861	Bearing Retainer	1	M-12707	Buogu
12 862	Twin Bearing Retainer	1	M-12708	Buohv
12 863	Tin Friction Plug, 1-5/16" Dia.	2	M-20205	Buoiw
12 864	Switch, single phase or D. C., H&H No. 100006-AE	1	------	Buojx
12 865	Switch Plate, H&H No. 8841	1	------	Buoky
12 866	Switch, three phase, H&H No. 80104	1	------	Buolz
12 867	Cover Cap	1	P-12062	Buoma
12 868	Bearing Spacer	1	V-12669	Buoob
12 869	Locking Nuts for Ball Bearing	4	V-11430	Buopc
12 870	Ball Bearing, rear, ND No. 7601-XT	1	------	Buoqd
12 871	Ball Bearing, pinion end, ND No. C-8503-XT	1	------	Buore
12 872	Grease Deflector	1	M-13174-1	Buosf
12 873	Washer for Shock Absorber Spring	1	V-12711	Buotg
12 874	Shock Absorber Spring	1	V-12757	Buouh
12 875	Washer, between spring and worm	1	V-12754	Buovi
12 876	Worm, 5 Teeth, 60 Cycle or D. C.	1	M-12743	Buowj
12 877	Worm, 5 Teeth, 25 or 50 Cycle	1	M-12770	Buoxk
12 878	Worm, 7 Teeth, 40 Cycle only	1	M-12784	Buoyl
12 880	Key for Worm	1	V-12747	Bupab
12 881	Special Nut	1	M-12792	Bupcd
12 882	Retaining Ring	1	V-12793	Bupde
12 883	Shifter Handle with shaft	1	P-12728	Bupef
12 884	Shifter Index Plate	1	P-12726	Bupgh
12 885	Gear Shifter Cam	1	M-12729	Buphi
12 886	Detent Spring	2	V-10755	Bupij
12 887	¼" Dia. Steel Ball	4	------	Bupkl
12 888	Guide Rod for Shifter	1	M-12735	Bupmn
12 889	Shifter Yoke	1	P-13160	Bupno
12 890	Plunger for Shifter Yoke	2	V-12733	Bupop
12 891	Spring for Shifter Yoke	2	V-12734	Bupst
12 892	Retainer for Spring	2	V-12732	Buptu
12 893	Spring in Internal Gear	2	V-7094	Bupuv
12 894	Welch Plug, 15/16" Dia., x .065" Thick	1	------	Bupxy
12 895	Welch Plug, 1-5/16" Dia. x .065" Thick	1	------	Bupyz
12 896	T & B Squeeze Connector No. 2005	1	------	Bupza
12 897	Ruhber Covered Cord & Plug	1	R-14144-5	Buqap
12 898	¼"-20 x ⅞" Fillister Head Cap Screw	6	------	Buqcr
12 899	Seigalite Gasket under No. 12867	1	V-12096	Buqds
12 900	3/16" Dowel, case cover to case	2	P-11800-61	Buqet
12 901	5/16" Dowel, Transmission Case to Pedestal	1	P-11800-116	Buqfu
12 902	Drain for Attachment Hub (not shown)	1	V-12752	Buqix

Note — Always give us the serial number of your machine.

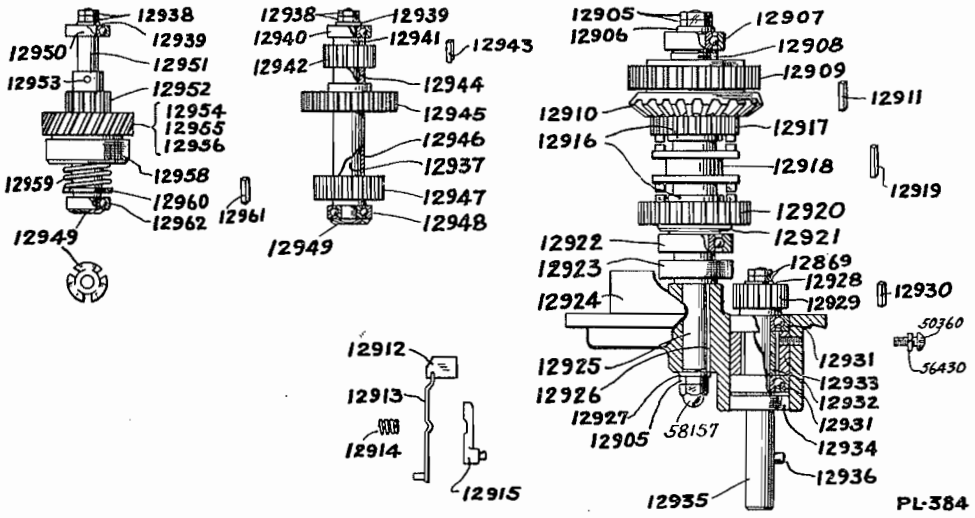

BEVEL GEAR CASE UNIT

Cat. No.	Part Name	No. Req.	Factory No.	Code Word
12 905	Special ½"-20 Hex Nut	3	----------	Buqod
12 906	Retaining Washer	1	M-17000-8-13	Buqpe
12 907	Ball Bearing, ND No. 77503	1	----------	Buqsh
12 908	Upper Spacer for Center Shaft	1	M-12701	Buqti
12 909	Slow Speed Gear, 46 Teeth	1	M-15225	Buquj
12 910	Bevel Gear, 46 Teeth (Must have Serial No.)	1	P-18800	Buqyn
12 911	Key in Bevel Gear	1	R-12430-59	Buqzo
12 912	Diving Key	1	M-15528	Burac
12 913	Control Arm for Diving Key	1	V-12749	Burbd
12 914	Spring	1	V-12759	Burce
12 915	Control Block for Diving Key	1	M-13024	Bureg
12 916	Bearing for Clutch Gear	2	M-12695	Burgi
12 917	Clutch Gear, 29 Teeth	1	M-12694	Burhj
12 918	Clutch Sleeve	1	M-12703	Burik
12 919	Special Feather Key	1	V-16577	Buroq
12 920	Clutch Gear, 38 Teeth	1	M-12696	Burpr
12 921	Lower Spacer for Center Shaft	1	M-12723	Bursu
12 922	Ball Bearing, ND No. 7504-XT	1	----------	Burtv
12 923	Oil Seal, 1-⅛" ID x 1.852" OD	1	----------	Buruw
12 924	Planetary	1	R-23545	Burwy
12 925	Center Shaft	1	R-12750	Burya
12 926	Key in Planetary	1	R-12430-18	Busaq
12 927	Retaining Washer	1	M-17000-8-12	Busbr
12 928	Washer	2	M-17000-7-9	Buscs
12 929	Beater Pinion, 17 Teeth	1	V-12683	Buseu
12 930	Key in Beater Pinion	1	R-12430-49	Busgw
12 931	Ball Bearing, ND-7503-XT	2	----------	Busiy
12 932	Inner Spacer	1	V-12688	Buska
12 933	Outer Spacer	1	V-12689	Busoe
12 934	Oil Seal 13/16" ID x 1.577" OD	1	----------	Buspf
12 935	Beater Shaft	1	P-12705	Busrh
12 936	Beater Drive Pin	1	P-11800-119	Bussi
12 937	Transmission Shaft	1	M-12717	Bustj
12 938	Retaining Nuts	4	V-12710	Busuk
12 939	Retaining Washer	2	M-17000-6-8	Busvl
12 940	Ball Bearing, ND No. 7500	1	----------	Busyo
12 941	Upper Spacer	1	V-12744	Butad
12 942	Gear, 15 Teeth	1	M-15224	Butbe
12 943	Key in No 12942, No. 12945, & No. 12947 gears	3	R-12430-2	Buteh
12 944	Central Spacer	1	V-12698	Butfi
12 945	Gear, 32 Teeth	1	M-12700	Butil
12 946	Lower Spacer	1	V-12697	Butkn
12 947	Gear, 23 Teeth	1	V-12699	Butlo
12 948	Ball Bearing ND No. 3200-XT	1	----------	Butor
12 949	Pre-loading Spring S-10-B	2	----------	Butps
12 950	Ball Bearing ND No. 7500	1	----------	Butru
12 951	Worm Gear Shaft	1	M-12725	Butsv
12 952	Gear, 15 Teeth	1	V-12719	Buttw
12 953	Pin for Gear	1	P-11800-93	Butux
*12 954	Worm Wheel Assembly, 29 Teeth for 60 Cyc. & DC	1	M-12740	Butvy
*12 955	Worm Wheel Assembly, 24 Teeth for 25 or 50 Cyc.	1	M-12769	Butxa
*12 956	Worm Wheel Assembly, 26 Teeth for 40 Cycle	1	M-12785	Butyb
*12 958	Lower Member for Release	1	M-12721	Buubs
12 959	Spring for Friction Drive	1	M-12724	Buuct
12 960	Washer	1	M-17000-9-28	Buudu
12 961	Key	1	R-12430-1	Buuev
12 962	Ball Bearing ND No. 3200-XT	1	----------	Buufw
12 963	Worm Wheel Shaft Assm.	1	----------	Buugx
	Consists of parts 12949, 12951, 12952, 12953, 12954, 12955, 12956, 12958, 12959, 12960, 12961, 12962			

* Worm Wheel and 12958 Lower Member furnished as a Unit Only

Note — Always give us the serial number of your machine.

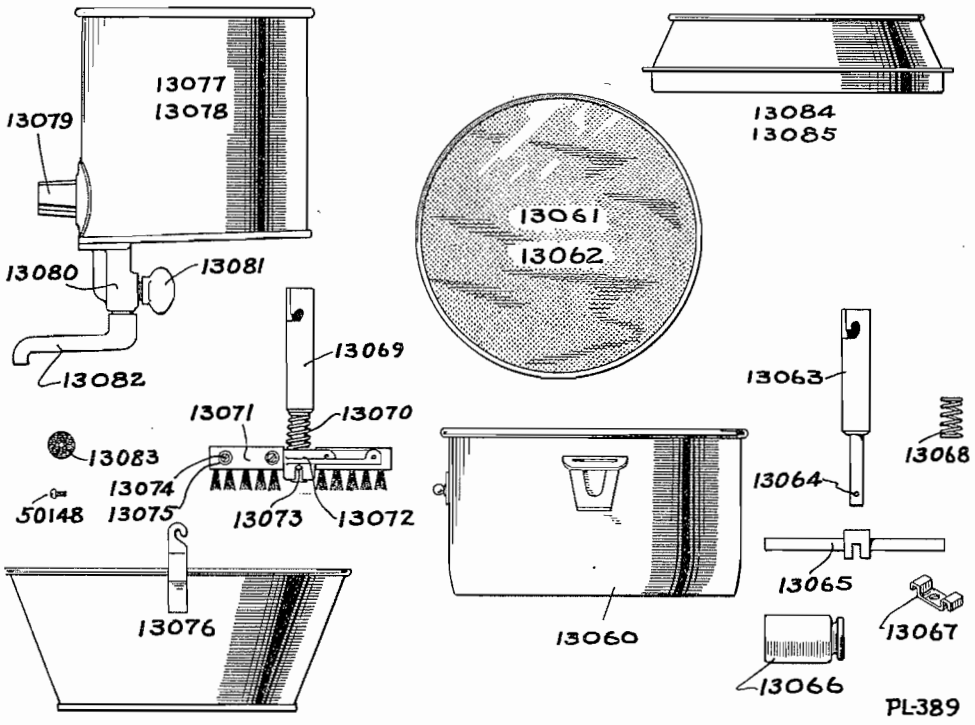

COLANDER AND SOUP STRAINER

Cat. No.	Part Name	No. Req.	Factory No.	Code Word
13 060	Colander Bowl for A-120 and A-150	1	R-12895	Buztz
13 061	Colander Disc, fine (.027" Perforations)	1	P-12896	Buzua
13 062	Colander Disc, coarse (3/32" Perforations)	1	P-12901	Buzye
13 063	Roller Shank	1	P-12898	Bwaaf
13 064	Pin, (Stainless steel)	1	P-11800-178	Bwabg
13 065	Roller Holder	1	P-12899	Bwach
13 066	Roller	2	M-10039	Bwadi
13 067	Retaining Clip	1	V-12900	Bwaej
13 068	Spring	1	M-7954	Bwafk
13 069	Brush Shank	1	P-12898	Bwagl
13 070	Spring	1	M-7954	Bwahm
13 071	Brush	2	M-12907	Bwain
13 072	Brush Holder	1	M-12908	Bwajo
13 073	Pin (stainless steel)	1	P-11800-178	Bwakp
13 074	¼"-20 x 1⅜" Round Head Screw	4	----------	Bwalq
13 075	Washer, ¼" x ½" x 1/32"	4	M-17000-3-1	Bwamr
13 076	Ice Jacket for A-120 and A-150	1	R-12903	Bwans
13 077	One Gallon Salad Oil Tank, complete	1	P-12861	Bwaot
13 078	Two Gallon Salad Oil Tank, complete	1	P-13234	Bwapu
13 079	Attaching Hub only	1	M-7123	Bwarw
13 080	Valve Assembly	1	P-12858	Bwasx
13 081	Valve Stem, with disc	1	M-12859	Bwaty
13 082	Spout	1	M-12857	Bwauz
13 083	Valve Disc	1	V-5740	Bwava
13 084	Splash Ring for A-120	1	R-12881	Bwawb
13 085	Splash Ring for A-150	1	R-12882	Bwaxc
13 086	Locking Screw for Spout (not shown)	1	V-15209	Bwayd

Note — Always give us the serial number of your machine.

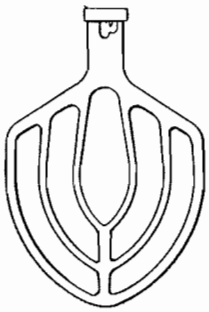

12970
12980

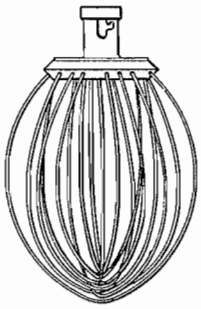

12971
12981

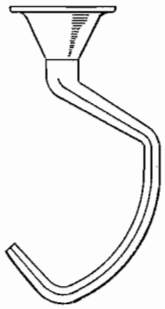

12972
12982

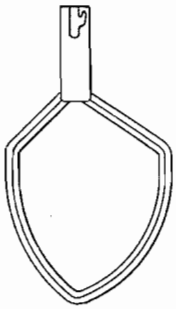

12973
12983

PL-385

BEATERS AND WHIPS

Cat. No.	Part Name	No. Req.	Factory No.	Code Word
12 970	A-120-B Flat Beater	1	R-23493	Buune
12 971	A-120-D Wire Loop Whip	1	R-23527	Buuof
12 972	A-120-E Dough Hook	1	S-23501	Buupg
12 973	A-120-PK Pastry Knife	1	R-18370	Buuqh
12 980	A-150-B Flat Beater	1	R-12662	Buuxo
12 981	A-150-D Wire Loop Whip	1	R-12741	Buuyp
12 982	A-150-E Dough Hook	1	R-13146	Buuzq
12 983	A-150-PK Pastry Knife	1	R-13027	Buvae

Note — Always give us the serial number of your machine.

COMMERCIAL STOCK LIST

Cat. No.	Description	No. Req.	Material	Code Word
50 004	No. 4-40 x 3/16" Round Head Machine Screw	2	Steel	Ixyif
50 008	No. 4-40 x ¼" Round Head Machine Screw	4	Steel	Ixymj
50 136	No. 8-32 x 5/16" Round Head Machine Screw	4	Steel	Iyfzy
50 148	No. 8-32 x ½" Round Head Machine Screw	1	Steel	Iygym
50 202	No. 10-24 x ¼" Round Head Machine Screw	2	Brass	Iykzo
50 208	No. 10-24 x ⅜" Round Head Machine Screw	2	Steel	Iylik
50 216	No. 10-24 x ½" Round Head Machine Screw	4	Steel	Iylwy
50 218	No. 10-24 x ½" Round Head Machine Screw	2	Brass	Iymaq
50 288	No. 12-24 x ½" Round Head Machine Screw	3	Steel	Iyqdv
50 296	No. 12-24 x ¾" Round Head Machine Screw	4	Steel	Iyqsk
50 316	No. 12-24 x 1½" Round Head Machine Screw	1	Steel	Iysat
50 360	¼"-20 x ½" Round Head Machine Screw	2	Steel	Iyurl
50 440	5/16"-18 x 1" Round Head Machine Screw	4	Steel	Izajs
50 660	No. 6-32 x ¼" Flat Head Machine Screw	2	Steel	Izoka
50 808	No. 10-24 x ⅝" Flat Head Machine Screw	8	Steel	Izxsz
51 261	No. 6-32 x ⅜" Oval Ctsk. Head Machine Screw	2	Plated	Jaykf
51 337	No. 8-32 x ½" Oval Ctsk. Head Machine Screw	4	Plated	Jecci
51 397	No. 10-24 x ½" Oval Ctsk. Head Machine Screw	4	Plated	Jefsm
51 420	No. 10-24 x 1¼" Oval Ctsk. Head Machine Screw	4	Steel	Jehez
51 480	No. 12-24 x ¾" Oval Ctsk. Head Machine Screw	4	Steel	Jeksc
51 496	No. 12-24 x 1¼" Oval Ctsk. Head Machine Screw	1	Steel	Jelur
51 497	No. 12-24 x 1¼" Oval Ctsk. Head Machine Screw	1	Plated	Jelxu
51 500	No. 12-24 x 1½" Oval Ctsk. Head Machine Screw	5	Steel	Jemal
51 501	No. 12-24 x 1½" Oval Ctsk. Head Machine Screw	1	Plated	Jemcn
52 016	No. 12-24 Hexagon Nut	3	Steel	Jiraw
52 108	⅜"-16 Hexagon Nut	1	Steel	Jiwyk
52 156	⅜"-24 Hexagon Nut	1	Steel	Joahc
52 824	⅜"-16 x 1¼" Hex. Head Cap Screw (see No. 52832)	4	Steel	Juomi
52 832	⅜"-16 x 1¾" Hex. Head Cap Screw	4	Steel	Juouq
56 170	⅛" Cotter Pin ¾" long	2	Steel	Ktuza
56 418	No. 10 Lockwasher 3/32" x 3/64"	2	Steel	Kumcy
56 424	No. 12 Lockwasher 3/32" x 3/64"	7	Steel	Kumlh
56 430	¼" Lockwasher 3/32" x 3/64"	2	Steel	Kumuq
56 432	¼" Lockwasher 1/16" x 1/16"	6	Steel	Kumyu
56 436	5/16" Lockwasher ⅛" x 1/16"	4	Steel	Kunen
56 442	⅜" Lockwasher ⅛" x 1/16"	5	Steel	Kunpy
58 012	No. 1 Taper Pin ¾" long (for shifter cam)	1	Steel	Lemmz
58 038	No. 3 Taper Pin 1" long	1	Steel	Leotg
58 040	No. 3 Taper Pin 1¼" long. (see No. 58038)	1	Steel	Leovi
58 157	½"-20 Acorn Nut	1	Plated	Leuxo

(Instructions Cont'd from page 2)

Style "D" is best for whipping cream, and beating eggs.
Two other styles frequently used are "E" for heavy bread doughs, and "PK" for cutting shortening into flour for pastry.

ATTACHMENTS Any of our No. 12 size attachments will fit this mixer, the most popular being the vegetable slicer and shredder, the meat chopper, the fruit juice extractor, the salad oil tank, and the colander. Before putting an attachment into the socket stop the motor, then insert with a slight twist toward the left so that the stop stud in the attachment is tight against the side of the hole that receives it. When in place tighten thumb screw 9 and put a drop of oil in cup 5.

The attachment drive has three speeds, governed by the speed handle of the mixer. For most attachments set the handle at number 1. The tool grinder may run at number 3 speed. THE CHOPPER ATTACHMENT MUST NEVER RUN FASTER THAN SPEED 1 when cutting meat, but when cutting vegetables it may run at number 2 speed. Use the motor switch to start and stop attachments, and always stop the motor before changing the speed of an attachment.

CARE OF MOTOR Motors for certain electrical specifications have removable cover plates at 10. If your machine has such a motor, have a service man take the covers off once a year and inspect the commutator, at which time brushes may be replaced if necessary and the commutator may be cleaned.

Form No. 4929 July 1949 Printed in U. S. A.—6379G