INSTRUCTIONS

MODELS A120, A200 & AS200 MIXERS

A120

ML-38904 (A120)
ML-38905 (A120T)

A200

ML-38906 (A200)
ML-38907 (A200T)
ML-38908 (A200DT)
ML-38909 (A200FT)

AS200

ML-38717 (AS200T)

HOBART CORPORATION
WORLD HEADQUARTERS
TROY, OHIO 45374

FORM 16969 (7-88)



MODEL A200 MIXER

Installation, Operation and Care of MODELS A120, A200 AND AS200 MIXERS

SAVE THESE INSTRUCTIONS

GENERAL

The Models A120, A200, and AS200 Mixers are bench-type mixers which feature Hobart-built motors and a #12 attachment hub as standard equipment. The A120 is furnished with a ⅓ H.P. motor; the A200 motor is ½ H.P. With the use of special agitators, the 12 quart bowl may be used on A200 and AS200 mixers.

The model A200 can be ordered as a floor model with timer or as a deluxe finish model with timer. The model AS200 has a Stir Switch which allows liquid ingredients to be added to semisolids at a reduced speed of 54 rpm.

A timer is available on all models.

There are a variety of attachments and accessories available for all models, and these are explained in a separate *Use and Applications Handbook* which is supplied with each mixer.

INSTALLATION

UNPACKING

Immediately after unpacking the mixer, check it for possible shipping damage. If this machine is found to be damaged after unpacking, save the packaging material and contact the carrier within 15 days of delivery.

Prior to installation, test the electrical service to assure it agrees with the specifications on the machine data plate located on the back side of the pedestal.

LOCATION

Place the mixer in its operating location. Bench models should be placed on a sturdy level surface. There should be adequate space around the mixer for the user to operate the controls and install and remove bowls.

Holes are provided in the base to permanently secure the mixer, although this is not necessary in normal installations. Four plastic plugs are supplied with the mixer to plug these holes if they are not used.

Floor models must be leveled front-to-back and side-to-side by sliding shims under the legs as required.

ELECTRICAL CONNECTIONS (Cord Connected Mixers)

WARNING: THE SUPPLY CORD ON THIS MACHINE IS PROVIDED WITH A THREE-PRONG GROUNDING PLUG. IT IS IMPERATIVE THAT THE OUTLET TO WHICH THIS PLUG IS CONNECTED BE PROPERLY GROUNDED. IF THE RECEPTACLE IS NOT THE PROPER GROUNDING TYPE, AN ELECTRICIAN SHOULD BE CONTACTED.

OPERATION

WARNING: MOVING BEATER IN BOWL. KEEP HANDS, CLOTHING, AND UTENSILS OUT WHILE IN OPERATION.

CONTROLS

All models (except the AS200) are furnished with an ON-OFF toggle switch which controls power to the mixer.

The ON-OFF-STIR switch (AS200 models) is a three-position rocker switch. When this switch is held in the STIR position, the mixer runs at half speed allowing you to slowly stir liquid ingredients before mixing at regular speeds, thus minimizing splash-out.

The TIMER (if equipped) is used in conjuction with the ON-OFF (or STIR) switch for timed mixing operations and will stop the mixer when the desired time has elapsed.

With the timer set on HOLD, the mixer will run until the ON-OFF switch is turned to OFF.

The GEAR SHIFT LEVER (Fig. 1) is used to change speeds. Always stop the mixer before changing speeds. To change speeds, turn the switch OFF, move the gear shift lever to the desired speed, and turn the switch back ON.

Speed 1 (Low) — This speed is for heavy mixtures such as bread dough, heavy batters, and potatoes.

Speed 2 (Medium) — This speed is for light dough which must rise quickly, cake batters, and some whipping operations.

Speed 3 (High) — This is a fast speed for light work such as whipping cream, beating eggs, and mixing thin batters.

The BOWL LIFT HANDLE (Fig. 1) is used to raise and lower the bowl. To raise the bowl, rotate the handle upward; rotating the handle downward lowers the bowl.

MIXING

This section explains operation of the mixer and how to install bowls, agitators, and attachments. A separate *Use and Applications Handbook* is provided with the mixer which contains information on mixing procedures and outlines specific uses for agitators, attachments, and accessories.

Bowl

New mixer bowls and agitators (beaters, whips, and dough arms) should be thoroughly washed with hot water and a mild soap solution, rinsed with either a mild soda or vinegar solution, and thoroughly rinsed with clear water BEFORE being put into service. This cleaning procedure should also be followed for bowls and agitators before whipping egg whites or whole eggs.

The bowl must be installed before the agitator. To install the bowl, fully lower the bowl support (Fig. 1). Position the bowl so the alignment bracket on the back of the bowl is in the bowl retainer and the alignment pins (Fig. 1) on the front of the bowl support fit in the holes on the sides of the bowl. Lock the bowl in place by rotating the bowl clamps (Fig. 1) over the ears of the bowl.

Agitator

To install an agitator (Fig. 1), the bowl must be installed and fully lowered. Place the agitator in the bowl, push it up on the agitator shaft, and turn it clockwise to seat the shaft pin in the slot of the agitator shank.

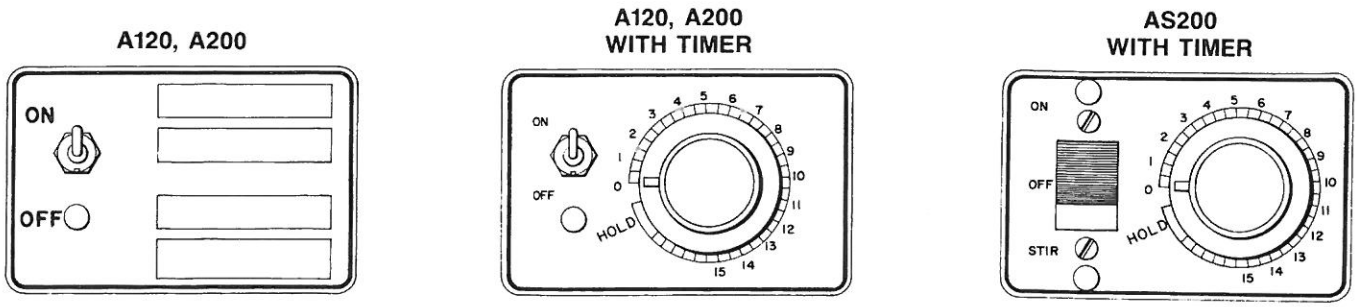

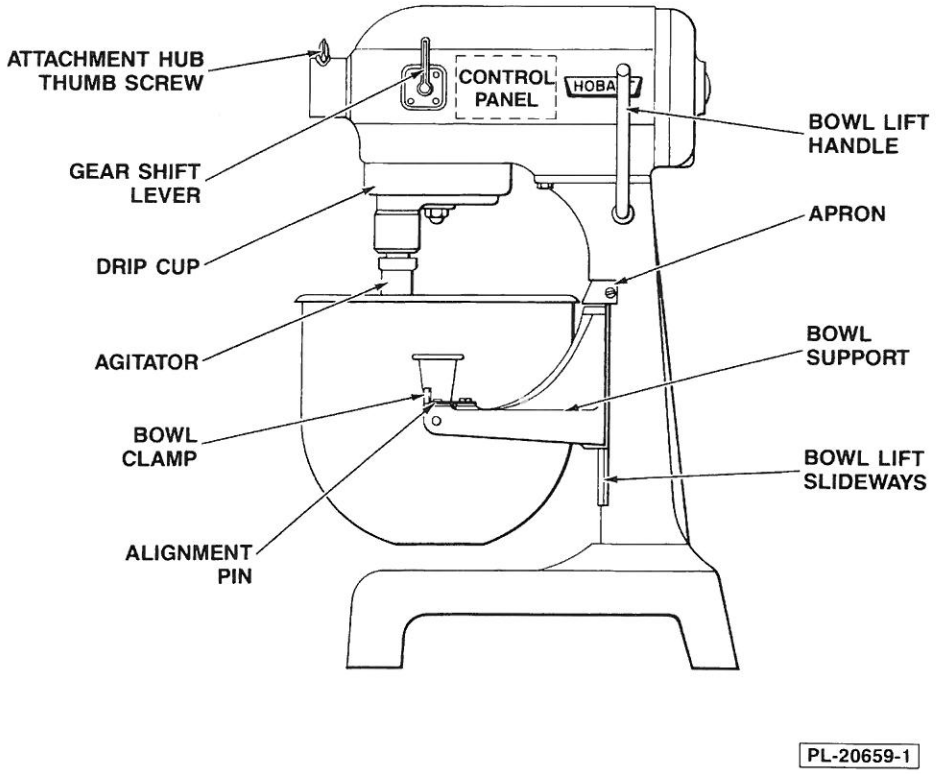

Fig. 1

Attachments

To install an attachment, loosen the thumb screw on the attachment hub (Fig. 1) and remove the plug. Insert the attachment into the attachment hub making certain that the square shank of the attachment is in the square driver of the mixer. Secure the attachment by tightening the thumb screw.

Move the gear shift lever to the desired speed and start the mixer to operate the attachment.

The meat and food chopper attachment should be operated in second or third speed. If material in the cylinder stalls the mixer, stop the mixer at once. DO NOT attempt to restart the mixer in a lower speed — remove the adjusting ring, knife, plate, and worm and clear the obstruction. THIS ATTACHMENT MUST NOT BE USED TO CHOP BREAD CRUMBS.

Mixing Heavy Dough

The moisture content of heavy dough is a critical factor when selecting proper mixing speed. You should never use 2nd speed when mixing heavy dough with an Absorption Ratio (AR) of 50% or less.

To determine the Absorption Ratio (AR) of a product, divide the water weight by the flour weight.

Example: Calculate the Absorption Ratio of a mixture containing 6 lbs. of flour and 3 lbs. of water.

$$6\overline{)3.00}^{.50} = 50\% = AR$$

Mixer Capacity Chart — Models A120 and A200

Recommended Maximum Capacities

PRODUCT	AGITATORS SUITABLE FOR OPERATION	A120	A200
CAPACITY OF BOWL (QTS. LIQUID)		12	20
		CAPACITIES — SINGLE BATCHES	
Egg Whites	D	1¼ pt.	1 qt.
Mashed Potatoes	B & C	10 lbs.	15 lbs.
Mayonnaise (Qts. of Oil)	B or C or D	4½ qts.	10 qts.
Meringue (Qts. of Water)	D	¾ pt.	1½ pts.
Waffle or Hot Cake Batter	B	5 qts.	8 qts.
Whipped Cream	D or C	2½ qts.	4 qts.
Cake, Angel Food (8-10 oz. cake)	C	7	15
Cake, Box or Slab or Layer	B or C	12 lbs.	20 lbs.
Cake, Cup	B or C	12 dz.	22 dz.
Cake, Pound	B	12 lbs.	21 lbs.
Cake, Short (Sponge)	C	8 lbs.	15 lbs.
Cake, Sponge	C	6½ lbs.	12 lbs.
Cookies, Sugar	B	20 dz.	35 dz.
Dough, Bread or Roll (Lt.-Med.) 60% AR §	E or ED	13 lbs.	25 lbs.*
Dough, Heavy Bread 55% AR §	ED	—	15 lbs.*
Dough, Pie	B & P	11 lbs.	18 lbs.
Dough, Thin Pizza 40% AR (max. mix time 5 min.) § ‡	ED	—	9 lbs.*
Dough, Med. Pizza 50% AR § ‡	ED	—	10 lbs.*
Dough, Thick Pizza 60% AR § ‡	ED	—	20 lbs.*
Dough, Raised Donut 65% AR	ED or S	—	9 lbs.**
Dough, Whole Wheat 70% AR	ED	—	20 lbs.
Eggs & Sugar for Sponge Cake	B & C	5 lbs.	8 lbs.
Icing, Fondant	B	7 lbs.	12 lbs.
Icing, Marshmallow	C	1¼ lbs.	2 lbs.
Shortening & Sugar, Creamed	B	9½ lbs.	16 lbs.
Pasta, Basic Egg Noodle (max. mix time 5 min.)	ED	—	5 lbs.*

*1st SPEED

**2nd SPEED

§ If high gluten flour is used, reduce above dough batch size by 10%.

‡ 2nd speed should never be used on 50% AR or lower products.
NOTE: %AR (% Absorption Ratio) = Water weight divided by flour weight x 100%. Capacity depends on moisture content of dough. Above capacities based on 12% flour moisture and 70°F water temperature.

ABBREVIATIONS — AGITATORS SUITABLE FOR OPERATION

B — Flat Beater
C — Wing Whip (4-Wing)
D — Wire Whip
ED — Dough Arm (20 qt.)
E — Dough Arm (12 qt.)
P — Pastry Knife
S — Sweet Dough Arm (20 qt.)

CLEANING

The mixer should be thoroughly cleaned daily.

Bowls and agitators should be removed from the mixer and cleaned in a sink.

DO NOT use a hose to clean the mixer - it should be washed with a clean damp cloth. The apron (Fig. 1) may be removed by loosening the two screws.

The drip cup (Fig. 1) should be removed periodically and wiped clean. A large flat blade screwdriver may be used to remove the drip cup.

MAINTENANCE

WARNING: UNPLUG MACHINE POWER CORD BEFORE BEGINNING ANY MAINTENANCE PROCEDURE.

LUBRICATION

The Bowl Clamp (Fig. 1)) should be lubricated twice a year.

Motor

The motor has sealed ball bearings which require no lubrication maintenance.

Bowl Lift Slideways

The slideways (Fig. 1) should be lubricated once each month. Remove the apron (Fig. 1) secured by two thumb screws to expose the slideways. Then apply a light coat of Lubriplate 630AA (supplied) to both slideways. Replace the apron and thumb screws.