INSTRUCTIONS



A120 MIXER

A120 MIXER

MODEL

A120 ML-104865

HOBART CORPORATION

701 S. RIDGE AVENUE
TROY, OHIO 45374-0001

937 332-3000

www.hobartcorp.com

FORM 34406 (Apr. 2000)

Installation, Operation, and Care of A120 MIXER

SAVE THESE INSTRUCTIONS

GENERAL

The model A120 mixer is a 12 quart, bench-type mixer with a 1/3 H.P. motor, a #12 attachment hub, and a 0 - 15 minute timer.

There are a variety of attachments and accessories available for all models, and these are explained in a separate *Use and Applications Handbook* which is supplied with each mixer.

INSTALLATION

UNPACKING

Immediately after unpacking the mixer, check for possible shipping damage. If this machine is found to be damaged after unpacking, save the packaging material and contact the carrier within 15 days of delivery.

Prior to installation, test the electrical service to assure that it agrees with the specifications on the machine data plate.

LOCATION

Place the mixer on a suitable sturdy level surface. There should be adequate space around the mixer for the user to operate the controls and install and remove bowls.

Holes are provided in the base to permanently secure the mixer, although this is not necessary in normal installations. Four plastic plugs are supplied with the mixer to plug these holes if they are not used.



MODEL A120 MIXER

ELECTRICAL CONNECTIONS (Cord Connected Mixers)

WARNING: THE ELECTRICAL CORD ON THIS MACHINE IS EQUIPPED WITH A THREE-PRONGED GROUNDING PLUG WHICH MUST BE CONNECTED TO A PROPERLY GROUNDED RECEPTACLE. IF THE RECEPTACLE IS NOT THE PROPER GROUNDING TYPE, CONTACT AN ELECTRICIAN. DO NOT REMOVE THE GROUNDING PRONG FROM THE PLUG.

OPERATION

WARNING: MOVING BEATER IN BOWL. KEEP HANDS, CLOTHING, AND UTENSILS OUT WHILE IN OPERATION.

A120 WITH TIMER

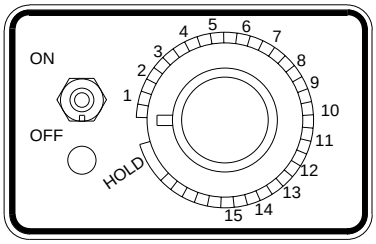

CONTROLS

All models are furnished with an On-Off toggle switch which controls power to the mixer.

The TIMER is used in conjunction with the On-Off switch for timed mixing operations and will stop the mixer when the desired time has elapsed.

With the timer set on HOLD, the mixer will run until the On-Off switch is turned to Off.

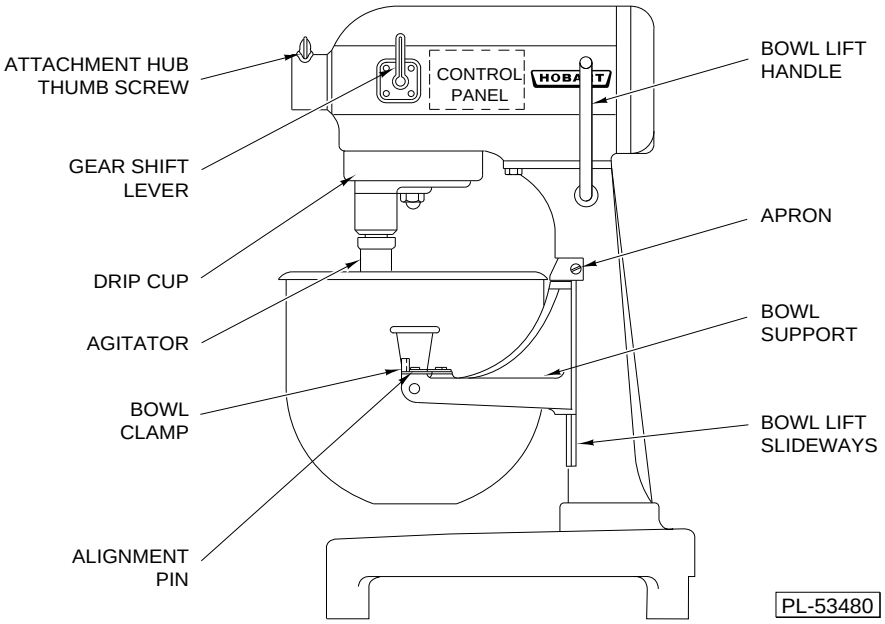

Fig. 1

The GEAR SHIFT LEVER (Fig. 1) is used to change speeds. Always stop the mixer before changing speeds. To change speeds, turn the switch Off, move the gear shift lever to the desired speed, and turn the switch back On.

Speed 1 (Low) — This speed is for heavy mixtures such as bread dough, heavy batters, and potatoes.

Speed 2 (Medium) —This speed is for light dough which must rise quickly, cake batters, and some whipping operations.

Speed 3 (High) — This is a fast speed for light work such as whipping cream, beating eggs, and mixing thin batters.

The BOWL LIFT HANDLE (Fig. 1) is used to raise and lower the bowl. To raise the bowl, rotate the handle upward; rotating the handle downward lowers the bowl.

MIXING

This section explains operation of the mixer and how to install bowls, agitators, and attachments. A separate *Use and Applications Handbook* is provided with the mixer which contains information on mixing procedures and outlines specific uses for agitators, attachments, and accessories.

Bowl

New mixer bowls and agitators (beaters, whips, and dough arms) should be thoroughly washed with hot water and a mild soap solution, rinsed with either a mild soda or vinegar solution, and thoroughly rinsed with clear water BEFORE being put into service. This cleaning procedure should also be followed for bowls and agitators before whipping egg whites or whole eggs.

The bowl must be installed before the agitator. To install the bowl, fully lower the bowl support (Fig. 1). Position the bowl so the alignment bracket on the back of the bowl is in the bowl retainer and the alignment pins (Fig. 1) on the front of the bowl support fit in the holes on the sides of the bowl. Lock the bowl in place by rotating the bowl clamps (Fig. 1) over the ears of the bowl.

Agitator

To install an agitator (Fig. 1), the bowl must be installed and fully lowered. Place the agitator in the bowl, push it up on the agitator shaft, and turn it clockwise to seat the shaft pin in the slot of the agitator shank.

Attachments

To install an attachment, loosen the thumb screw on the attachment hub (Fig. 1) and remove the plug. Insert the attachment into the attachment hub making certain that the square shank of the attachment is in the square driver of the mixer. Secure the attachment by tightening the thumb screw.

Move the gear shift lever to the desired speed and start the mixer to operate the attachment.

The meat and food chopper attachment should be operated in second or third speed. If material in the cylinder stalls the mixer, stop the mixer at once. DO NOT attempt to restart the mixer in a lower speed — remove the adjusting ring, knife, plate, and worm and clear the obstruction. THIS ATTACHMENT MUST NOT BE USED TO CHOP BREAD CRUMBS.

NOTE: Attachment hub should not be used while mixing.

CLEANING

WARNING: UNPLUG MACHINE POWER CORD BEFORE BEGINNING ANY CLEANING PROCEDURE.

The mixer should be thoroughly cleaned daily.

Bowls and agitators should be removed from the mixer and cleaned in a sink.

DO NOT use a hose to clean the mixer — it should be washed with a clean damp cloth. The apron (Fig. 1) may be removed by loosening the two screws.

The drip cup (Fig. 1) should be removed periodically and wiped clean. A large flat blade screwdriver may be used to remove the drip cup.

MAINTENANCE

WARNING: UNPLUG MACHINE POWER CORD BEFORE BEGINNING ANY MAINTENANCE PROCEDURE.

LUBRICATION

Bowl Clamps (Fig. 1) should be lubricated twice a year.

Motor

The motor has sealed ball bearings which require no lubrication maintenance.

Bowl Lift Slideways

The slideways (Fig. 1) should be lubricated once each month. Remove the apron (Fig. 1) secured by two thumb screws to expose the slideways. Then apply a light coat of Lubriplate 630AA (supplied) to three sides of both slideways. Replace the apron and thumb screws.

SERVICE

If service is needed on this equipment, contact your local Hobart Service Office.