# INSTRUCTION MANUAL

## . . . *with Catalog of Replacement Parts*

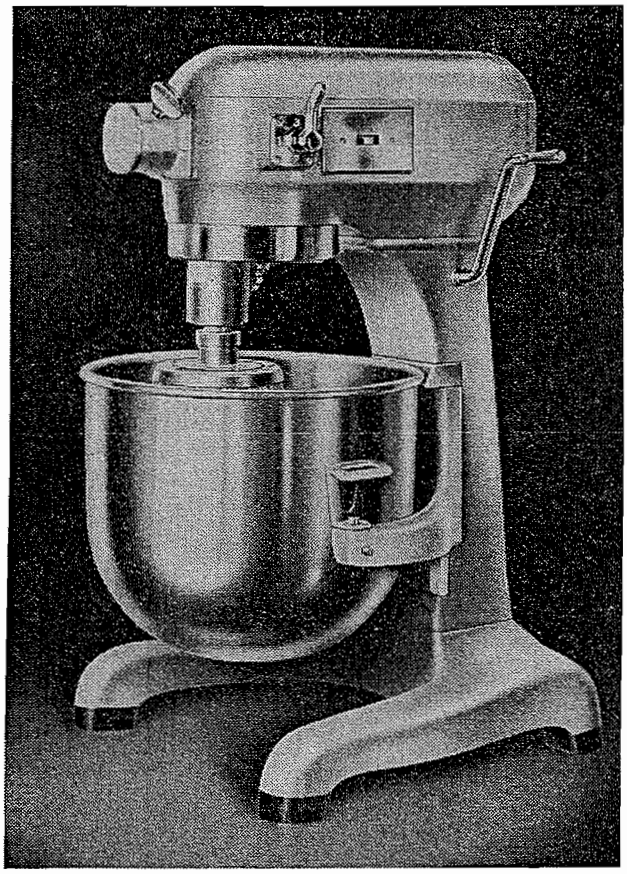

# HOBART

## MODELS A-200 and A-200T

## MIXERS

ML-16861 — A-200

ML-16862 — A-200T

HOBART

*The World's Oldest and Largest Manufacturer of Computing Scales and Food Store, Kitchen, Bakery and Dishwashing Machines*

**THE HOBART MANUFACTURING COMPANY** TROY, OHIO

FORM 6728-C (Revised Apr. 1969) (Supersedes Form 6728-B, Oct. 1968)

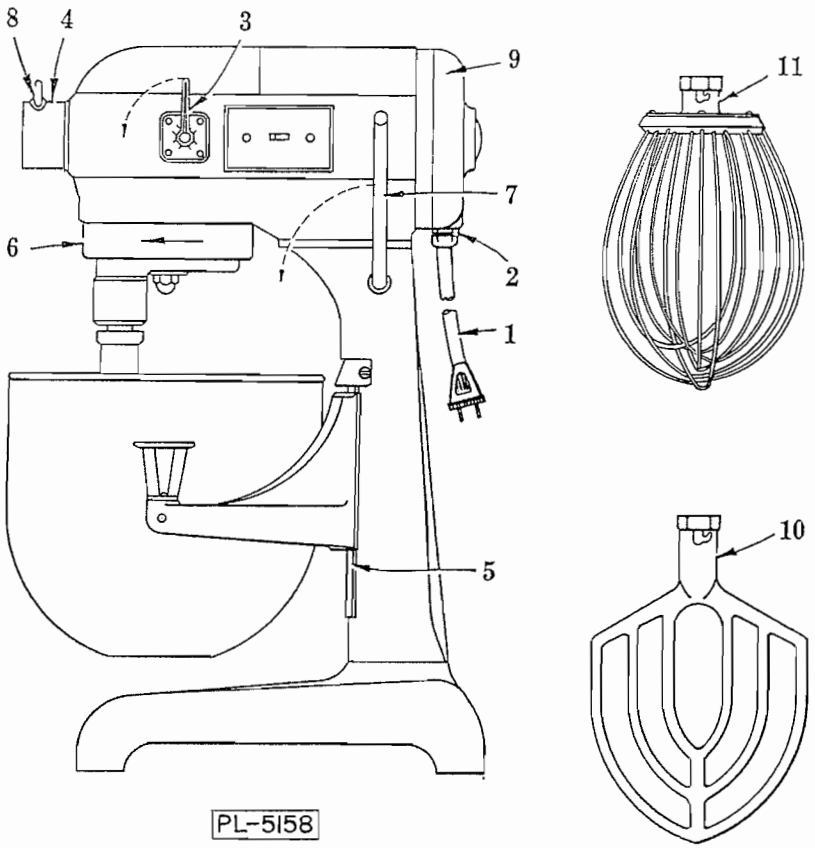


# Instructions for Operation and Care of Models A-200 and A-200T Hobart Mixers

## INSTALLATION:

**If cord and plug is not used with this machine electrical connections should be made by qualified workmen who will observe all applicable Safety Codes and the National Electrical Code.**

Before making electrical connections, CHECK THE SPECIFICATIONS ON THE NAME PLATE TO MAKE SURE THEY AGREE WITH THOSE OF YOUR ELECTRICAL SERVICE.

A cord and plug (1) is furnished as standard equipment on this mixer (except for three phase current). The electrical outlet (2) is tapped for 1/2" conduit should a permanent installation be desired.

Multiphase motors should be so connected that the planetary will revolve in the direction of the arrow in the illustration.

### A-200

Set the shifter handle (3) at the desired speed and turn on the switch to start the motor.

### A-200T

To start the motor for non-timed operation, set the shifter handle (3) at the desired speed, then set the timer on hold and turn on the switch. For timed operation set the timer for the desired time and then turn on the switch.

## LUBRICATION:

The motor (9) has grease packed ball bearings so will require little attention. The transmission gearing is packed with special grease that will last for several years. When grease is needed for replacement, it should be ordered from your local Hobart representative. The small oiler (4) is for lubricating attachments. Oil only when an attachment is in place and never use more than a drop or two. Lubricate the bowl slideways (5) occasionally by applying a small amount of oil or grease with the tip of the finger. Only mineral oils are suitable for this type of lubrication.

The polished drip cup (6) is a safe-guard to prevent any lubricant that might work out of the planetary gearing from dropping into the bowl. Remove the drip cup (by pulling straight down) once a month and wipe it clean.

## SPEED CONTROL:

To change speeds, first turn off the motor, then move the shifter handle (3) to the desired speed. In the illustration the shifter handle is set at number 3 or high speed.

Use number 3 speed for fast, light work as whipping cream, beating eggs and mixing thin batters.

Number 1 or slow speed is for heavy mixtures, like breakfast rolls, etc. Also use this speed for the food chopper attachment (see attachments). In many mixing operations it is customary to start on Number 1 and then change to a higher speed as the work progresses.

## BOWL LIFT:

Pull the lift handle (7) forward to lower the bowl. It is necessary to lower the bowl to change agitators, this also makes the bowl more accessible for filling. When raising the bowl, move the lift handle a little beyond the vertical center until you feel it touch the stop. To mash potatoes, or to cream butter, start with the bowl down and raise it slowly into working position, while the agitator is rotating.

## AGITATORS:

When assembling an agitator the bowl must be in the down position. Slip the agitator up on the shaft and turn it until the driving pin in the shaft reaches the L-shaped slot in the agitator shank. Agitators of various styles are available, each suited to a particular job.

The style "B" beater (10) is commonly used for thin batters. cakes, and mashing potatoes. The style "D" whip (11) is best for whipping cream and beating eggs. Two other styles frequently used are the "E" dough arm for heavy bread doughs, and the "P" pastry knife for cutting shortening into flour for pastry.

## ATTACHMENTS:

Various attachments and accessories are available for this machine, such as; Dicer, Vegetable Slicer & Shredder, Food Chopper, Soup Strainer and Colander, Juice Extractor, Coffee Mill, Tool Sharpener, Oil Dropper, Tray Support, Water Jacket, Bowl Truck, Bowl Splash Cover and Bowl Extension Ring. The attachment socket is for the size 12 attachments. Before putting an attachment into the socket, stop the motor, then insert with a slight twist toward the left so that the stop stud in the attachment is tight against the side of the hole that receives it. When in place tighten the thumb screw (8) and put a drop of oil in the oiler (4).

The attachment drive has three speeds, governed by the shifter handle (3) of the mixer. For most attachments set the handle at number 1. Set the speed at number 3 for the tool grinder. THE CHOPPER ATTACHMENT MUST NEVER RUN FASTER THAN SPEED 1 when cutting meat, but when cutting vegetables it may run at the number 2 speed. Use the motor switch to start and stop attachments, and always stop the motor before changing the speed of an attachment.

## MOTORS:

Motor parts are listed on separate Motor Parts Sheet.

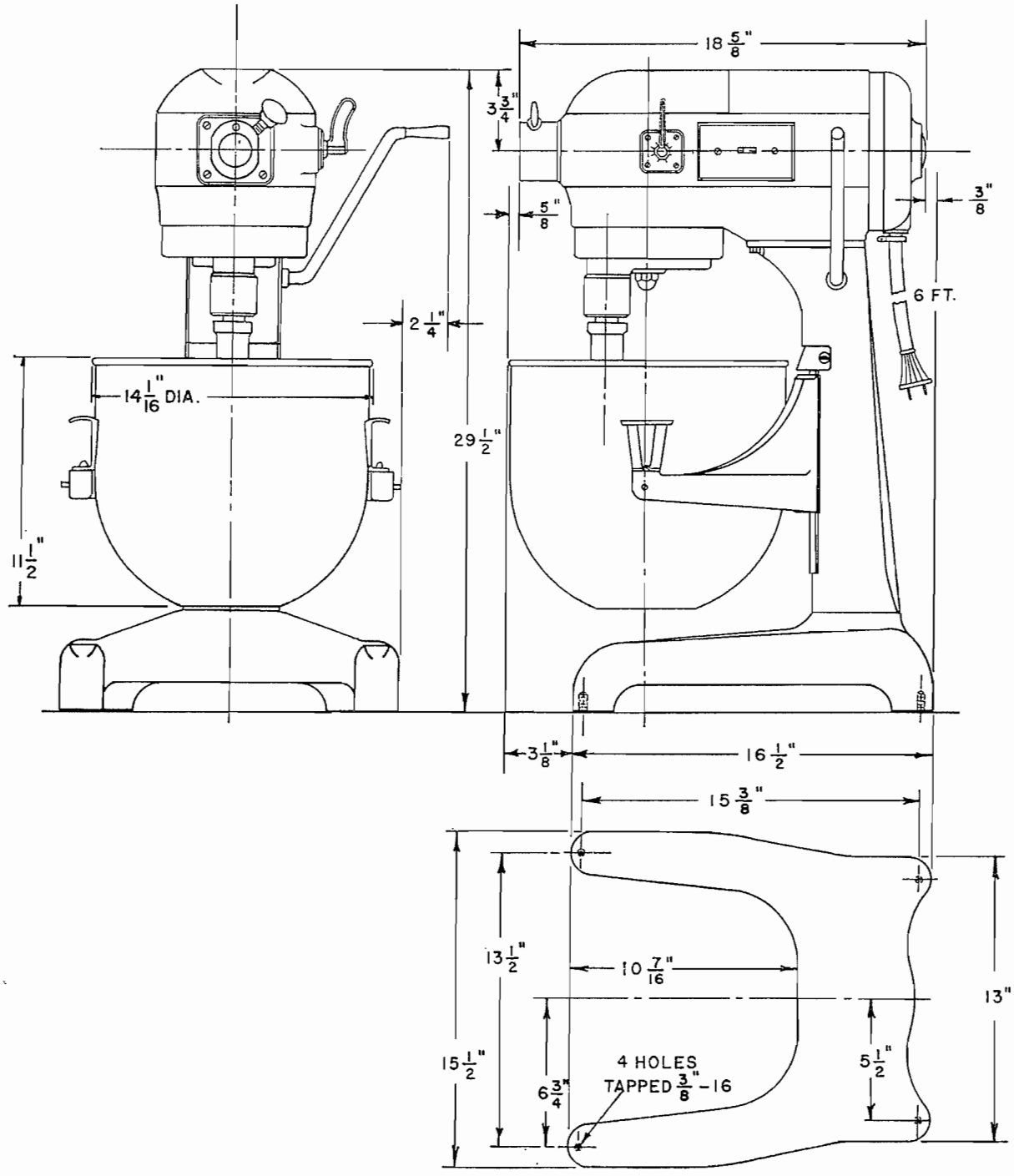


PL-5324

P-17446

## INSTALLATION DIAGRAM

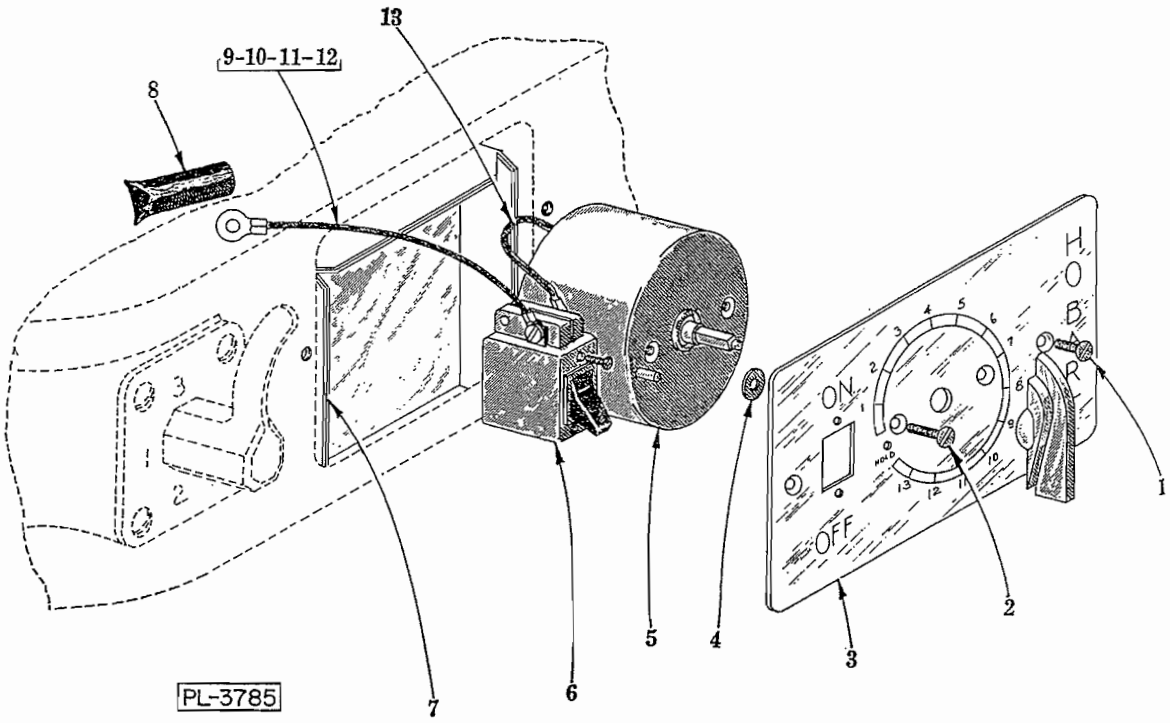


SWITCH, TIMER AND CONTROL UNIT

# SWITCH, TIMER AND CONTROL UNIT

| ILLUS. PL-3785 | PART NO. | NAME OF PART | AMT. |
|---|---|---|---|
| 1 | SC-15-8 | Mach. Screw - #6-32 x 1/4" Oval Hd. | 2 |
| 2 | SC-14-41 | Mach. Screw - #5-40 x 3/8" Flat Hd. | 2 |
| 3 | B-104050 | Plate - Switch | 1 |
| 4 | WS-2-18 | Washer (Between Timer & Plate) | 2 |
| 5 | P-86087-1 | Timer (Incls. items #2 & P-86087-2) | 1 |
| 6 | P-87711-98-1 | Switch | 1 |
| 7 | P-70782 | Insulator | 2 |
| 8 | M-61285-1 | Boot - Insulating | 2 |
| 9 | R-67000-71 | Lead (Switch to Motor) | 1 |
| 10 | SC-27-28 | Mach. Screw - #8-32 x 1/4" Rd. Hd. (For Connecting leads) | 2 |
| 11 | WL-10-1 | Lock Washer - #8 Ext. Shakeproof | 2 |
| 12 | NS-10-11 | Mach. Nut - #8-32 Hex | 2 |
| 13 | R-67000-70 | Lead (Timer to Switch) | 1 |
| | P-86087-2 | Knob - Timer | 1 |
| | M-71291-3 | Conversion Kit (A-200 to A-200T) (2 Conductor) (1 Ph. ONLY) (Incls. items #1 thru 13) | 1 |

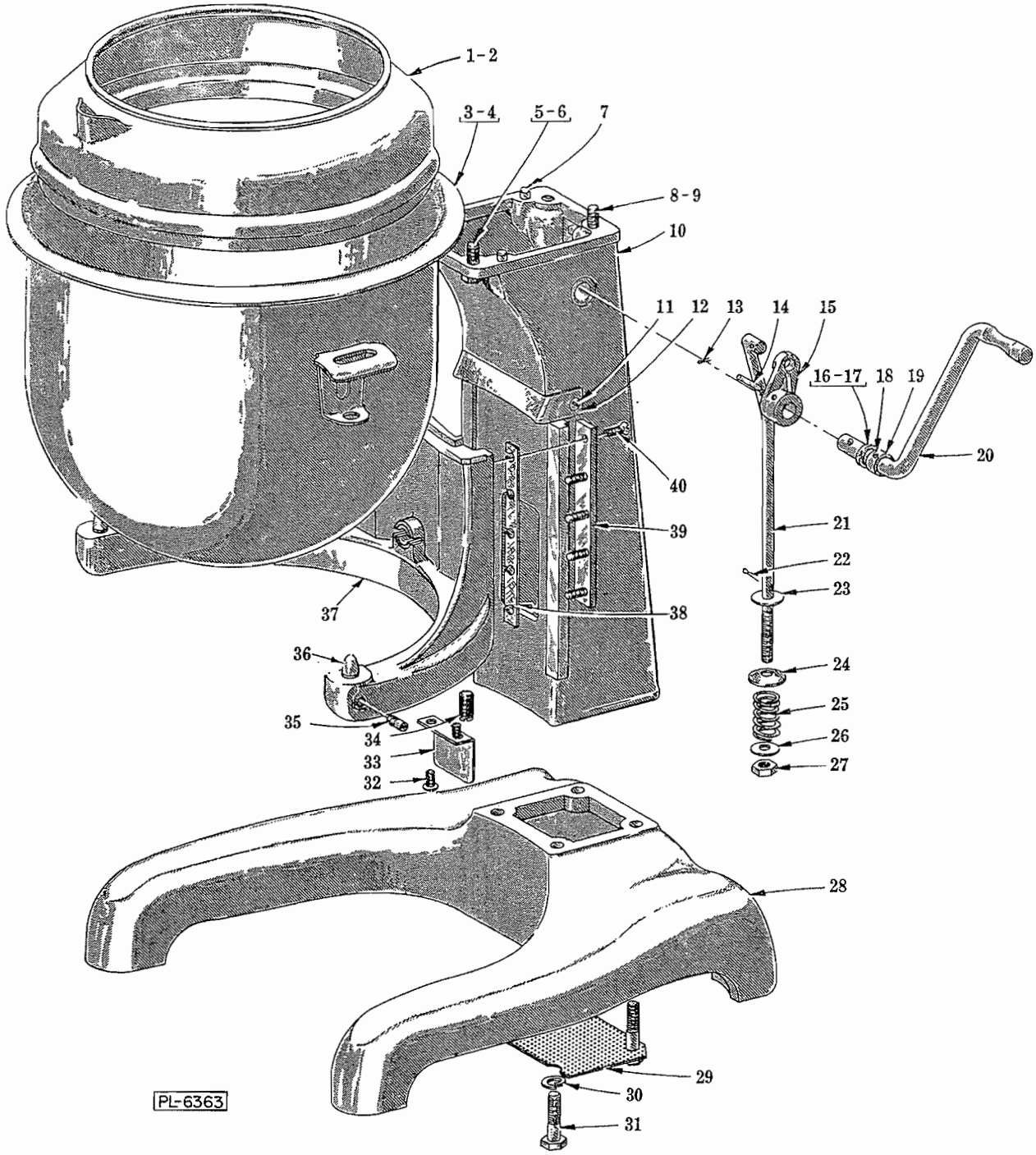


BASE, PEDESTAL AND BOWL UNIT

# BASE, PEDESTAL AND BOWL UNIT

| ILLUS. PL-6363 | PART NO. | NAME OF PART | AMT. |
|---|---|---|---|
| 1 | S-20531-1 | Splash Cover & Bowl Extension (20 Qt.) | 1 |
| 2 | R-86069-1 | Cover - Splash (12 Qt.) | 1 |
| 3 | S-62103 | Bowl Assy. (20 Qt.) | 1 |
| 4 | S-15360 | Bowl Assy. (12 Qt.) | 1 |
| 5 | SC-36-27 | Fin. Bolt - 5/16"-18 x 1" Hex Hd. | 2 |
| 6 | WL-3-43 | Lock Washer - 5/16" x .117" x .056" | 2 |
| 7 | P-11800-116 | Dowel | 2 |
| 8 | SC-8-92 | Mach. Screw - 5/16"-18 x 1" Rd. Hd. | 2 |
| 9 | WL-3-43 | Lock Washer - 5/16" x .117" x .056" | 2 |
| 10 | T-78635 | Pedestal | 1 |
| 11 | SC-10-32 | Mach. Screw - #8-32 x 3/8" Truss Hd. | 2 |
| 12 | P-78506 | Shield - Upper Splash | 1 |
| 13 | PC-3-55 | Cotter Pin - 1/8" x 3/4" | 1 |
| 14 | PT-3-50 | Taper Pin - #3 x 1" Lg. | 1 |
| 15 | M-12685 | Arm - Bowl Lift | 1 |
| 16 | WS-9-11 | Washer (STL) | As Reqd |
| 17 | WS-9-13 | Washer (Fiber) | As Reqd |
| 18 | ——— | Open Number | - |
| 19 | ——— | Open Number | - |
| 20 | P-60422-1 | Lift Handle Sub-Assy. | 1 |
| 21 | P-15215 | Rod - Bowl Lift | 1 |
| 22 | PC-3-55 | Cotter Pin - 1/8" x 3/4" | 1 |
| 23 | WS-6-33 | Washer (STL) | As Reqd. |
| 24 | V-12745 | Washer - Special | 1 |
| 25 | V-12782 | Spring | 1 |
| 26 | WS-6-26 | Washer (STL) | 1 |
| 27 | NS-13-26 | Full Nut - 3/8"-24 Hex Fin. | 1 |
| 28 | T-78633 | Base | 1 |
| 29 | P-78501 | Screen - Air | 1 |
| 30 | WL-4-2 | Lock Washer - 3/8" x .136" x .070" | 4 |
| 31 | SC-62-27 | Fin. Bolt - 3/8"-16 x 1-3/4" Hex Hd. | 4 |
| 32 | SC-60-56 | Mach. Screw - #10-32 x 5/16" Rd. Hd. | 2 |
| 33 | P-78505 | Shield - Lower Splash | 1 |
| 34 | SC-83-16 | Set Screw - 7/16"-14 x 7/8" Hdls. Oval Pt. | 1 |
| 35 | V-5014 | Stud - Ice Jacket Hook | 2 |
| 36 | V-6938-2 | Pin - Bowl Locating | 2 |
| 37 | M-24869-1 | Bowl Support Sub-Assy. Unit (Incls. items #32, 33, 34 & 36) | 1 |
| 38 | V-16389 | Shim - Bowl Support (Give Thk.) | As Reqd. |
| 39 | M-15218-1 | Gib - Bowl Support | 2 |
| 40 | SC-13-49 | Mach. Screw - #10-24 x 5/8" Flat Hd. | 10 |

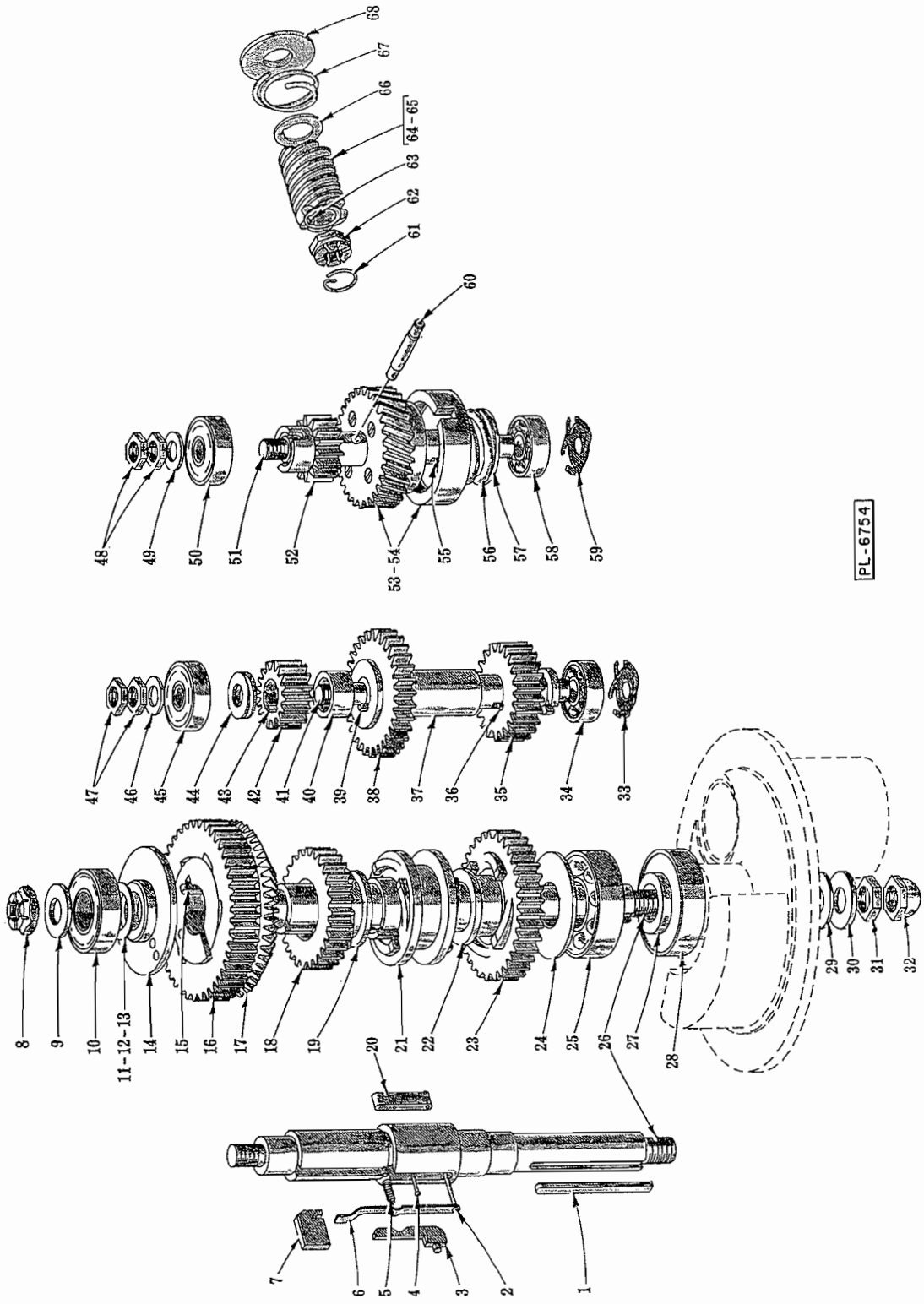


TRANSMISSION GEAR UNIT

# TRANSMISSION GEAR UNIT

| ILLUS. PL-6754 | PART NO. | NAME OF PART | AMT. |
|---|---|---|---|
| 1 | R-12430-18 | Key | 1 |
| 2 | V-15575-2 | Rivet | 1 |
| 3 | M-13024 | Block - Diving Key Control | 1 |
| 4 | V-15575-1 | Rivet | 1 |
| 5 | V-12759 | Spring | 1 |
| 6 | V-12749 | Arm - Diving Key Control | 1 |
| 7 | M-15528 | Key - Diving | 1 |
| 8 | NS-32-29 | Stop Nut - 1/2"-20 "Flexloc" | 1 |
| 9 | WS-8-13 | Washer - Retaining | 1 |
| 10 | BB-20-18 | Ball Bearing - N.D. #77503 | 1 |
| 11 | WS-10-18 | Shim - Brg. (.002" Thk.) | As Reqd |
| 12 | WS-10-19 | Shim - Brg. (.003" Thk.) | As Reqd. |
| 13 | WS-10-20 | Shim - Brg. (.010" Thk.) | As Reqd. |
| 14 | M-12701 | Spacer - Upper | 1 |
| 15 | R-12430-59 | Key | 1 |
| 16 | M-15225 | Gear - Slow Speed (46T) | 1 |
| 17 | P-18800 | Gear - Zerol Bevel (46T) | 1 |
| 18 | M-12694 | Gear - Clutch (29T) | 1 |
| 19 | M-12695 | Bearing - Clutch Gear | 1 |
| 20 | V-16577 | Key - Special Feather | 1 |
| 21 | M-12703 | Sleeve - Clutch | 1 |
| 22 | M-12695 | Bearing - Clutch Gear | 1 |
| 23 | M-12696 | Gear - Clutch (38T) | 1 |
| 24 | M-12723 | Spacer - Lower | 1 |
| 25 | BB-20-6 | Ball Bearing - N.D. #7504 | 1 |
| 26 | R-12750 | Shaft - Center | 1 |
| 27 | M-14674 | Spacer - Bearing | 1 |
| 28 | M-23483 | Seal - Oil | 1 |
| 29 | WS-7-26 | Washer (Fiber) | 1 |
| 30 | WS-24-1 | Washer - Retaining (STL) | 1 |
| 31 | V-10928-2 | Nut - 1/2"-20 Special | 1 |
| 32 | M-24715-3 | Acorn Nut - 1/2"-20 | 1 |
| 33 | SL-2-8 | Spring - Preloading | 1 |
| 34 | BB-5-1 | Ball Bearing - N.D. #3200 | 1 |
| 35 | V-12699 | Gear (23T) | 1 |
| 36 | R-12430-2 | Key | 1 |
| 37 | V-12697 | Spacer - Lower | 1 |
| 38 | M-12700 | Gear (32T) | 1 |
| 39 | R-12430-2 | Key | 1 |
| 40 | V-12698 | Spacer - Central | 1 |
| 41 | M-12717 | Shaft - Transmission | 1 |
| 42 | M-103960 | Gear (15T) | 1 |
| 43 | R-12430-2 | Key | 1 |
| 44 | V-12744 | Spacer - Upper | 1 |
| 45 | BB-5-2 | Ball Bearing - N.D. #7500 | 1 |
| 46 | WS-6-8 | Washer - Retaining | 1 |
| 47 | V-12710 | Nut - Retaining | 2 |
| 48 | V-12710 | Nut - Retaining | 2 |
| 49 | WS-6-8 | Washer - Retaining | 1 |
| 50 | BB-5-2 | Ball Bearing - N.D. #7500 | 1 |
| 51 | M-12725 | Shaft - Worm Gear | 1 |
| 52 | V-12719 | Gear (15T) | 1 |
| 53 | M-86525-1 | Lower Release, Worm Wheel & Hub Sub-Assy. (29T.) (60 Cy.) | 1 |
| 54 | M-86525-2 | Lower Release, Worm Wheel & Hub Sub-Assy. (24T.) (50 Cy.) | 1 |
| 55 | R-12430-1 | Key | 1 |
| 56 | M-12724 | Spring - Friction Drive | 1 |
| 57 | WS-9-28 | Washer | 1 |
| 58 | BB-5-1 | Ball Bearing - N.D. #3200 | 1 |
| 59 | SL-2-8 | Spring - Preloading | 1 |
| 60 | V-18431 | Pin | 1 |
| 61 | V-12793 | Retaining Ring | 1 |
| 62 | M-12792 | Nut - Special | 1 |
| 63 | V-12747 | Key | 1 |
| 64 | M-12743-1 | Worm (5T) (60 Cy.) | 1 |
| 65 | M-12770 | Worm (5T) (50 Cy.) | 1 |
| 66 | V-12754 | Washer | 1 |
| 67 | V-12757 | Spring - Shock Absorber | 1 |
| 68 | V-12711 | Washer - Shock Absorber Spring | 1 |
| | P-24551 | Center Shaft Assy. Unit (Incls. items #2, 4, 5, 6, 20 & 26) | 1 |
| | M-24861-1 | Worm Gear Shaft Sub-Assy. Unit (60 Cy.) (Incls. items #51, 52, 53, 55, 56, 57 & 60) | 1 |
| | M-24861-2 | Worm Gear Shaft Sub-Assy. Unit (50 Cy.) (Incls. items #51, 52, 54, 55, 56, 57 & 60) | 1 |

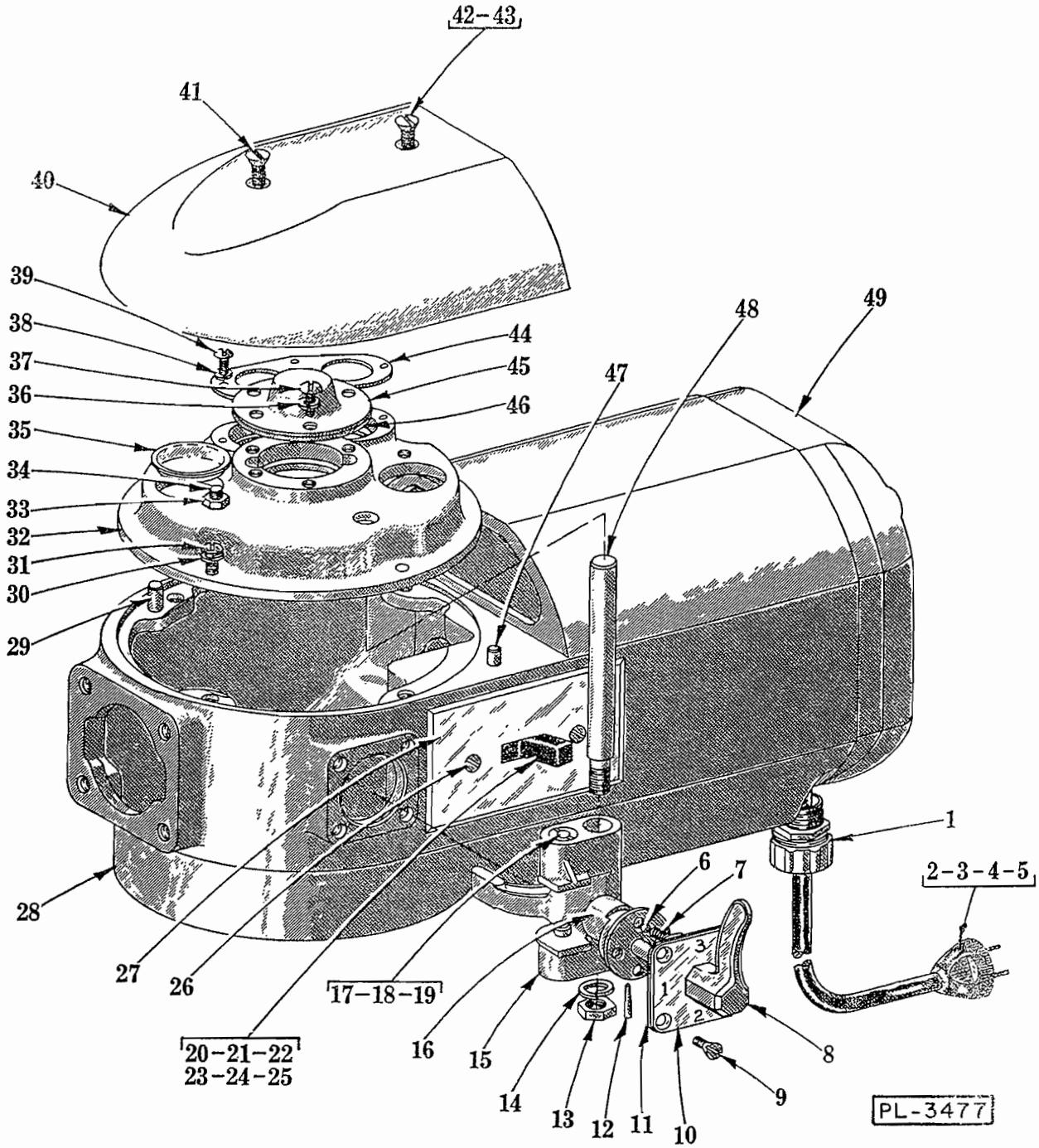


TRANSMISSION CASE AND SHIFTER UNIT

# TRANSMISSION CASE AND SHIFTER UNIT

| ILLUS. PL-3477 | PART NO. | NAME OF PART | AMT |
|---|---|---|---|
| 1 | FE-6-31 | Connector - Strain Relief | 1 |
| 2 | S-63335-9 | Cord & Plug (2 Cond., Under 125 V.) | 1 |
| 3 | ——— | Open Number | - |
| 4 | S-63335-30 | Cord & Plug (3 Cond., Under 150 V.) | 1 |
| 5 | S-63335-43 | Cord & Plug (3 Cond., 200-250 V.) | 1 |
| 6 | BA-2-9 | Ball - 1/4" Dia. | 2 |
| 7 | V-10755 | Spring - Detent | 2 |
| 8 | P-12728 | Handle - Shifter | 1 |
| 9 | SC-30-24 | Mach. Screw - #10-24 x 1/2" Oval Hd. | 4 |
| 10 | P-12726 | Plate - Shifter Index | 1 |
| 11 | M-23946 | Gasket - Shifter Index Plate | 1 |
| 12 | PT-3-28 | Taper Pin - #1 x 3/4" Lg. | 1 |
| 13 | NS-13-22 | Full Nut - 3/8"-16 Hex Fin. | 1 |
| 14 | WL-4-2 | Lock Washer - 3/8" x .136" x .070" | 1 |
| 15 | P-13160 | Yoke - Shifter | 1 |
| 16 | M-12729 | Cam - Gear Shifter | 1 |
| 17 | V-12733 | Plunger - Shifter Yoke | 2 |
| 18 | V-12734 | Spring - Shifter Yoke | 2 |
| 19 | V-12732 | Retainer - Spring (Shifter Yoke) | 2 |
| 20 | P-87711-99-4 | Switch (1 Ph.) | 1 |
| 21 | P-87711-99-2 | Switch (2 & 3 Ph., Under 250 V.) | 1 |
| 22 | P-87711-57-1 | Switch (2 & 3 Ph., Above 250 V.) | 1 |
| 23 | P-87810-19-1 | Switch (D.C.) | 1 |
| 24 | P-16504 | Insulator - Switch | 2 |
| 25 | M-74835 | Screw - Switch Mounting | 2 |
| 26 | SC-30-6 | Mach. Screw - #6-32 x 3/8" Oval Hd. | 2 |
| 27 | B-103118 | Plate - Switch | 1 |
| 28 | T-12678 | Case - Transmission | 1 |
| 29 | P-11800-116 | Dowel | 1 |
| 30 | WL-3-28 | Lock Washer - #12 x .062" x .047" | 4 |
| 31 | SC-8-51 | Mach. Screw - #12-24 x 3/4" Rd. Hd. | 4 |
| 32 | P-67750 | Transmission Shaft Support and Screw Assy. (Incls. items #33 & 34) | 1 |
| 33 | NS-9-36 | Mach. Nut - #12-24 Hex | 1 |
| 34 | SC-8-56 | Mach. Screw - #12-24 x 1-1/2" Rd. Hd. | 1 |
| 35 | M-64871 | Plug - Friction | 2 |
| 36 | WL-3-28 | Lock Washer - #12 x .062" x .047" | 3 |
| 37 | SC-8-48 | Mach. Screw - #12-24 x 1/2" Rd. Hd. | 3 |
| 38 | WL-3-22 | Lock Washer - #10 x .055" x .040" | 4 |
| 39 | SC-7-74 | Mach. Screw - #10-24 x 3/8" Rd. Hd. | 4 |
| 40 | S-18231-1 | Cover - Transmission Case | 1 |
| 41 | SC-15-54 | Mach. Screw - #12-24 x 1-1/4" Oval Hd. | 1 |
| 42 | SC-15-55 | Mach. Screw - #12-24 x 1-1/2" Oval Hd. | 1 |
| 43 | NS-9-36 | Mach. Nut - #12-24 Hex | 2 |
| 44 | M-12708 | Retainer - Twin Bearing | 1 |
| 45 | M-20394-2 | Cap - Bearing Retainer | 1 |
| 46 | M-20395 | Retainer - Bearing | 1 |
| 47 | P-11800-61 | Dowel | 2 |
| 48 | M-12735 | Rod - Shifter Guide | 1 |
| 49 | -------- | Motor (see separate Motor Parts Sheet) | 1 |
| | R-77768-1 | Case - Transmission (Timed Mach.) | 1 |
| | PL-3-14 | Plug - 15/16" Dia. Expansion (Not Shown) | 1 |
| | PL-3-28 | Plug - 1-5/16" Dia. Expansion (Not Shown) | 1 |

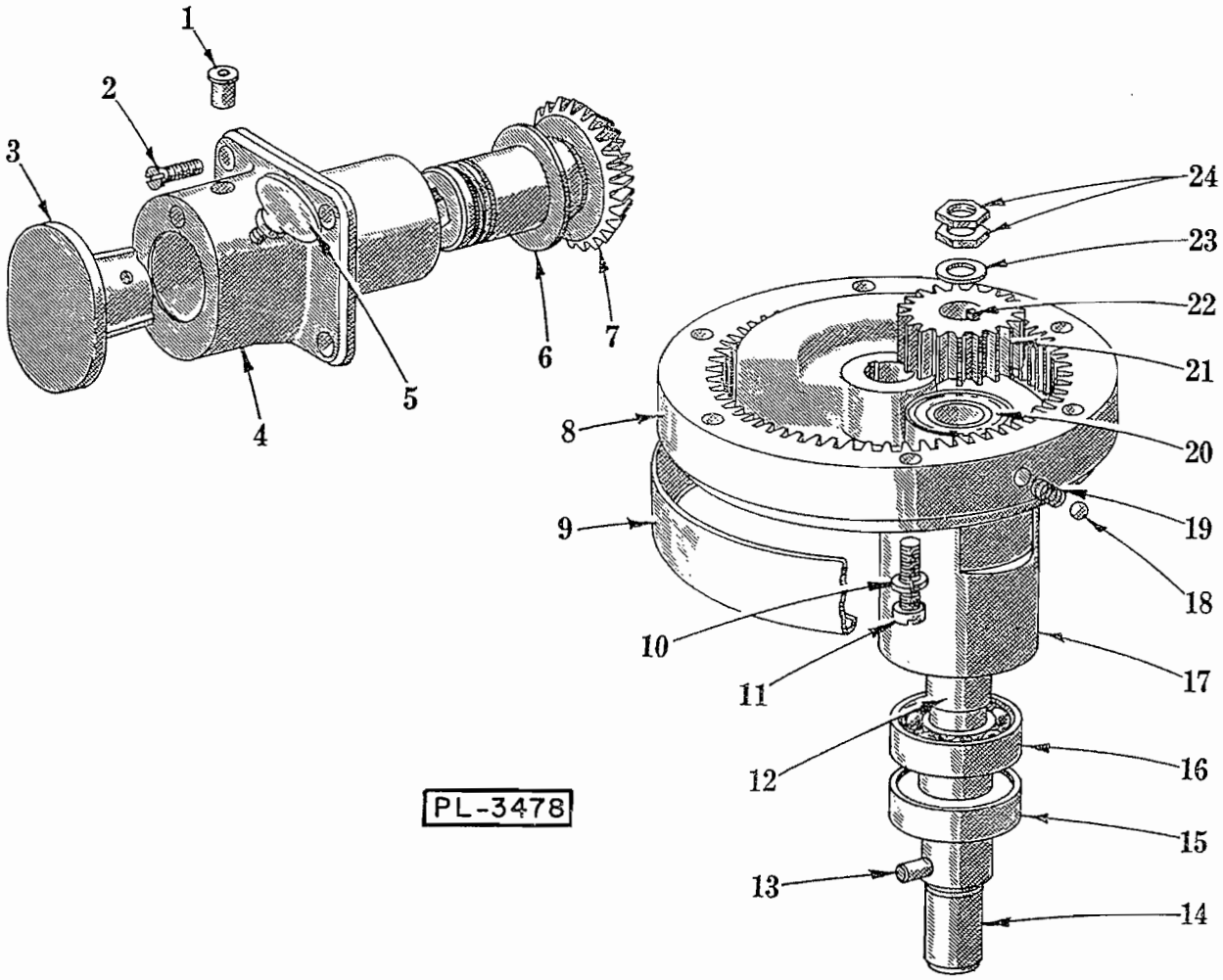


PLANETARY AND ATTACHMENT HUB UNIT

# PLANETARY AND ATTACHMENT HUB UNIT

| ILLUS. PL-3478 | PART NO. | NAME OF PART | AMT. |
|---|---|---|---|
| 1 | OG-3-30 | Oiler | 1 |
| 2 | SC-13-71 | Mach. Screw - #12-24 x 3/4" Flat Hd. | 4 |
| 3 | P-22869 | Plug - Attachment Hole | 1 |
| 4 | R-12686 | Hub - Attachment | 1 |
| 5 | M-4202-2 | Thumb Screw | 1 |
| 6 | M-12746 | Washer - Thrust (Give Thk.) | As Reqd |
| 7 | M-24889 | Zerol Bevel Drive Gear (35T) & Plug Sub-Assy. Unit | 1 |
| 8 | M-24893-1 | Internal Gear Sub-Assy. Unit (63T) (Incls. items #18 & 19) | 1 |
| 9 | P-15214 | Cup - Drip | 1 |
| 10 | WL-3-35 | Lock Washer - 1/4" x .047" x .078" | 6 |
| 11 | SC-38-6 | Cap Screw - 1/4"-20 x 1-1/8" Fil. Hd. | 6 |
| 12 | V-15219 | Spacer - Beater Shaft | 1 |
| 13 | M-65062-1 | Pin | 1 |
| 14 | M-24883 | Agitator Shaft Sub-Assy. Unit (Incls. item #13) | 1 |
| 15 | M-23482 | Seal - Oil (1" I.D.) | 1 |
| 16 | BB-20-6 | Ball Bearing - N.D. #7504 | 1 |
| 17 | S-23166 | Planetary | 1 |
| 18 | BA-2-9 | Ball - 1/4" Dia. | 2 |
| 19 | V-7094 | Spring | 2 |
| 20 | BB-17-12 | Ball Bearing - N.D. #7503 | 1 |
| 21 | M-15217 | Pinion - Beater (19T) | 1 |
| 22 | R-12430-56 | Key | 1 |
| 23 | WS-7-9 | Washer - Special | 1 |
| 24 | V-11430 | Nut - Special | 2 |

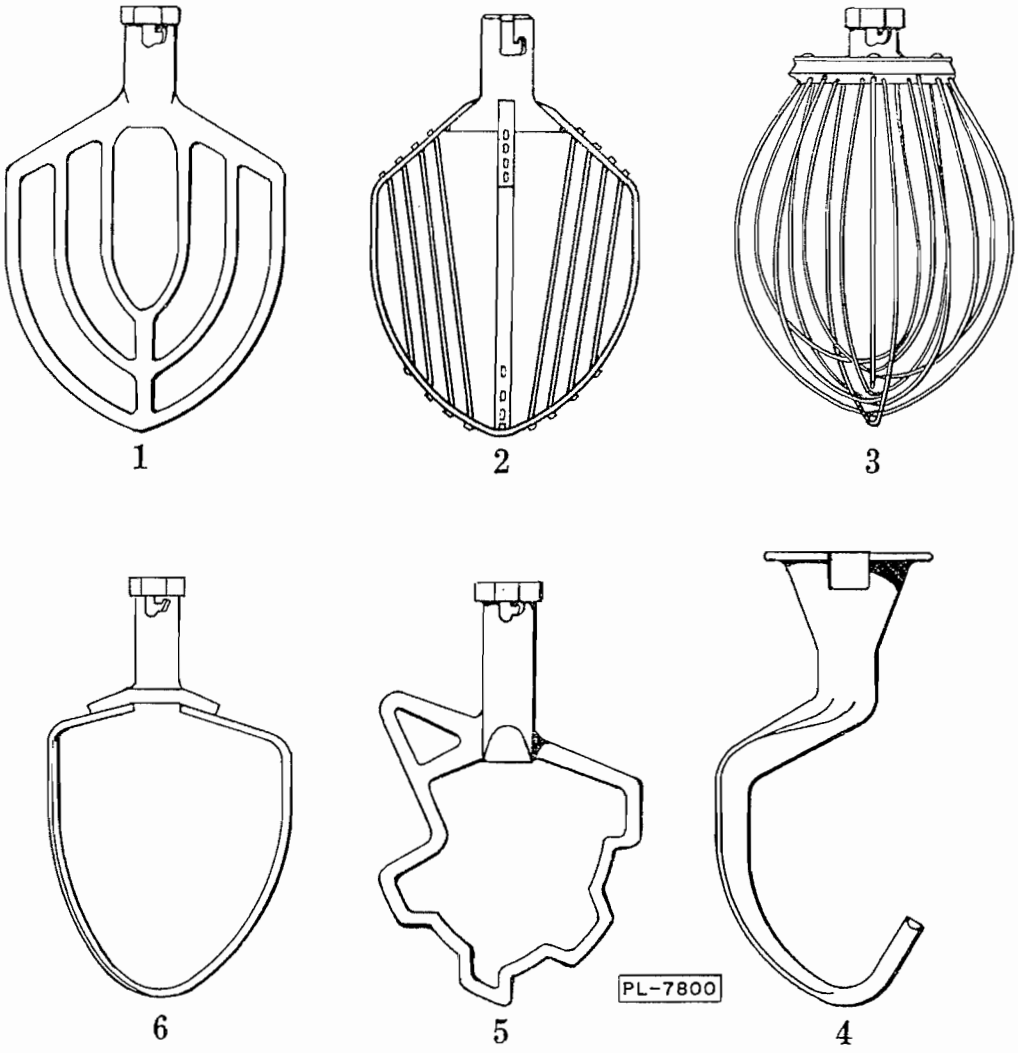


## AGITATORS

| ILLUS. PL-7800 | PART NO. 20 QT. | PART NO. 12 QT. | NAME OF PART | AMT. |
|---|---|---|---|---|
| 1 | R-23126 | R-23502 | "B" Flat Beater | 1 |
| 2 | R-22755 | ——— | "C" Wing Whip | 1 |
| 3 | R-23511-1 | R-23523-1 | "D" Wire Whip | 1 |
| 4 | S-23467 | S-62886 | "E" Dough Arm | 1 |
| 5 | R-8022 | ——— | "S" Sweet Dough Beater | 1 |
| 6 | R-74286 | ——— | "P" Pastry Knife | 1 |