HOBART

INSTRUCTION MANUAL

... with Replacement Parts

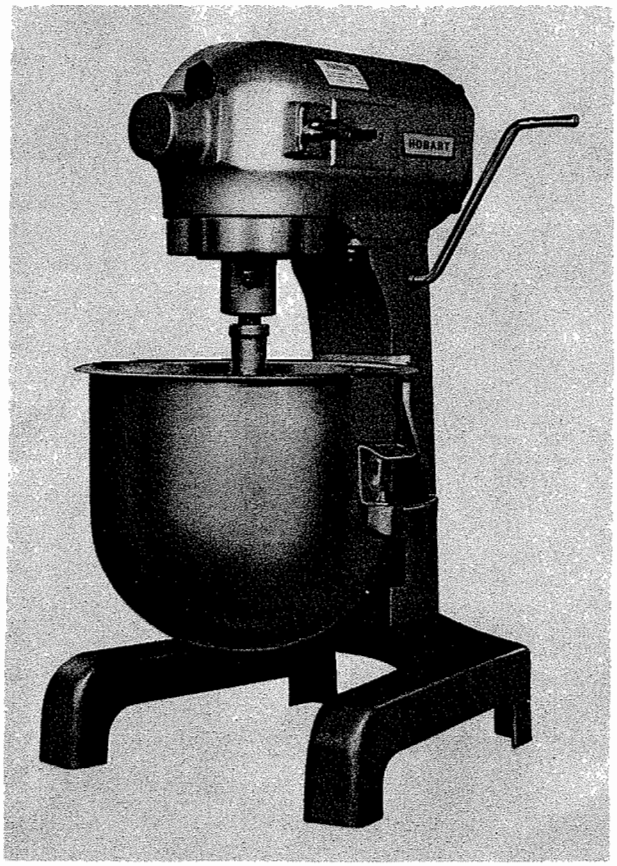

MODELS A-200 and AS-200 SERIES MIXERS

(INCLUDES MOTOR PARTS)

ML-19204 - A-200
ML-19205 - A-200T
ML-19210 - A-200D
ML-19211 - A-200DT
ML-19212 - A-200F
ML-19213 - A-200FT
ML-19214 - A-200FD
ML-19215 - A-200FDT

ML-19207 - AS-200
ML-19208 - AS-200T
ML-19219 - AS-200D
ML-19220 - AS-200DT
ML-19221 - AS-200F
ML-19222 - AS-200FT
ML-19223 - AS-200FD
ML-19224 - AS-200FDT

A product of HOBART CORPORATION TROY, OHIO 45374

FORM 13453 (3-80)

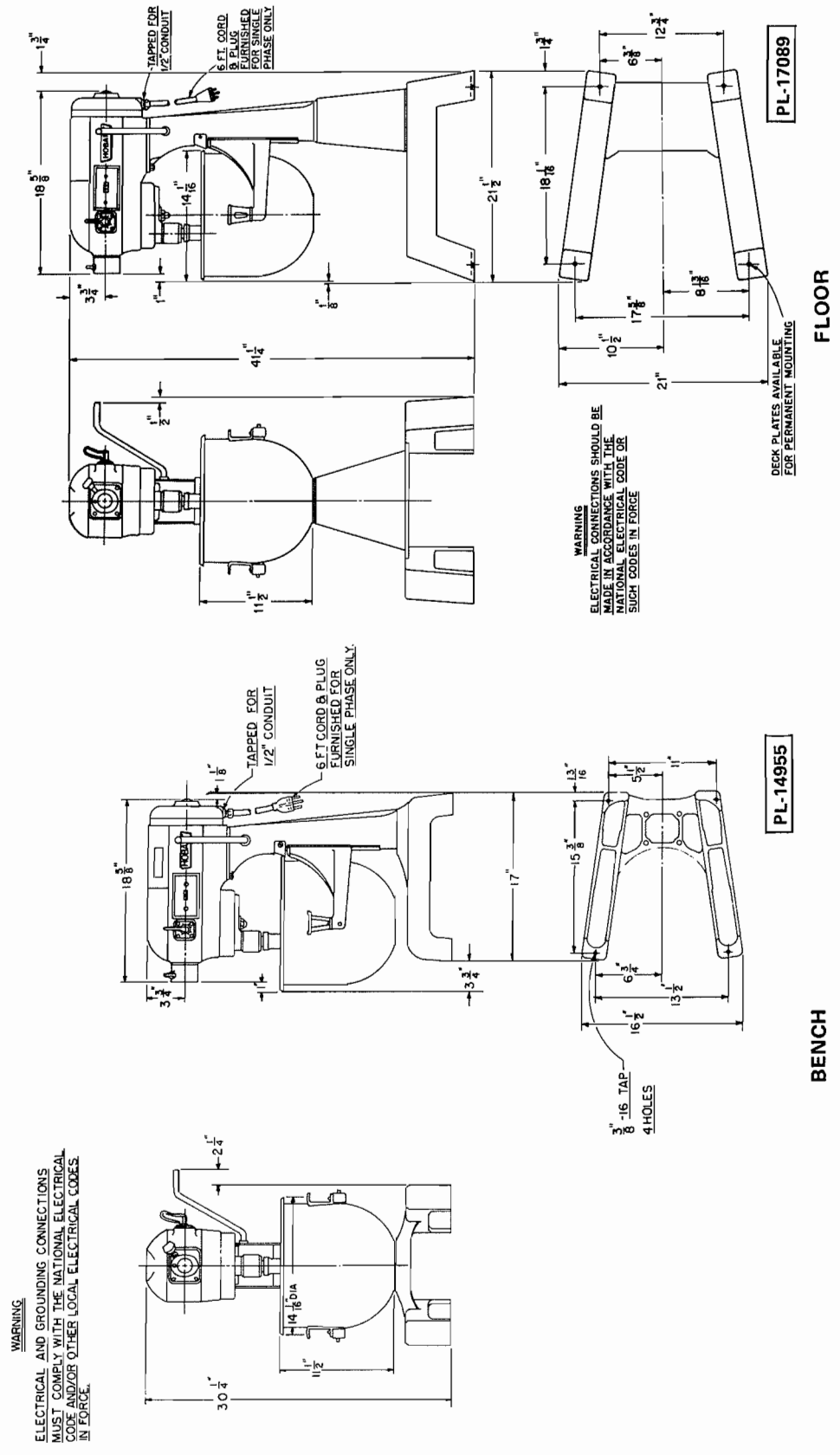

INSTALLATION DIAGRAM

Installation, Operation and Care of MODELS A-200 AND AS-200 SERIES MIXERS

GENERAL

The A-200 and AS-200 series mixers have a bowl capacity of 20 quarts. Each is powered by a 1/3 horsepower electric motor which drives a constant mesh gear transmission. They are available in bench or floor models.

Attachments

The mixer incorporates a #12 attachment hub. Available attachments include: soup strainer and colander; dicer; vegetable slicer and shredder; food chopper and a speed drive.

Accessories

Available accessories include: tray support; bowl jacket and combination bowl splash cover extension ring. A stainless steel table is available for bench models and a bowl truck for floor models.

INSTALLATION

Before making electrical connections, CHECK THE SPECIFICATIONS ON THE DATA PLATE (5, Fig. 1) TO ASSURE THEY AGREE WITH THOSE OF YOUR ELECTRICAL SERVICE.

A cord and plug is furnished as standard equipment on single phase machines.

Three phase machines are furnished with a junction box for permanent electrical connection. The box is tapped for 1/2" conduit. Electrical connections should be made by qualified workmen who will observe all applicable safety codes and the National Electrical Code.

WARNING: Check to assure power disconnect switch is "OFF" before making the line connection.

The direction of rotation must be verified on all three phase installations.

To check direction of rotation, turn power supply to mixer "ON". Place the shifter handle (1, Fig. 1) in Speed #1 and momentarily energize mixer by turning "ON" then "OFF". The planetary must rotate in the direction of the arrow.

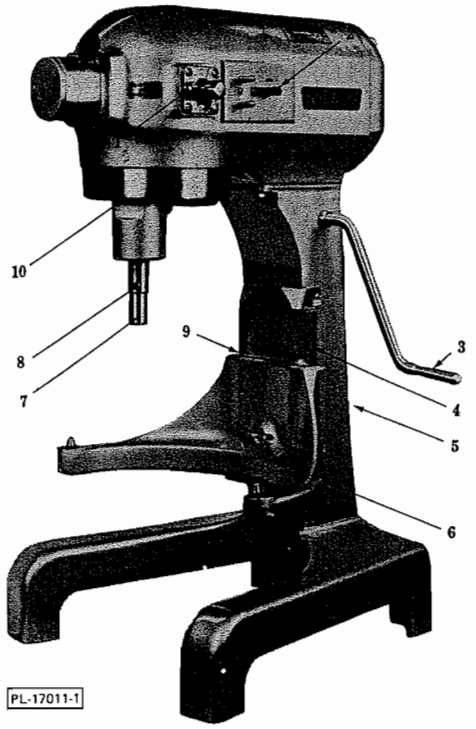

Fig. 1

WARNING: Disconnect power supply before continuing procedure.

If rotation is incorrect interchange any two of the incoming power supply leads at the junction box.

OPERATION

Controls

The A-200 and AS-200 series mixers may be operated in any of three speeds. With the mixer stopped, the speed selection is made by moving the shifter handle (1, Fig. 1) to the desired speed.

SPEED #1 is a slow speed for heavy mixtures such as bread dough.
SPEED #2 is an intermediate speed for dough which must rise quickly or for whipping.

SPEED #3 is a fast speed for light work like whipping cream, beating eggs and mixing thin batters.

The mixer is started by moving the "ON-OFF" switch (2, Fig. 1) to "ON" and stopped by moving the "ON-OFF" switch to "OFF".

On "AS" models the "Rocker" switch must be pushed to "Stir" and held for slower initial stirring or blending. This feature may be used in any transmission speed. The "Rocker" switch also serves as the ON-OFF switch.

Bowl Lift

Pull the lift handle (3, Fig. 1) forward to lower the bowl lift (6, Fig. 1). It is necessary to lower the bowl to change agitators. This also makes the bowl more accessible for filling. When raising the bowl, move the lift handle a little beyond the vertical center until it touches the stop. To mash potatoes or to cream butter, start with bowl down and raise it slowly into working position while the agitator is rotating.

Agitators

When attaching an agitator, the bowl must be in the down position. Slip the agitator up on the shaft (7, Fig. 1) and turn it until the driving pin in the shaft (8, Fig. 1) reaches the L-shaped slot in the agitator shank. Agitators which may be used with this mixer are shown on the last page of this manual.

The style "B" beater is commonly used for thin batters, cakes and mashing potatoes. The style "D" whip is best for whipping cream and beating eggs. Two other styles frequently used are the "ED" dough arm for bread doughs, and the "P" pastry knife for cutting shortening into flour for pastry. The "C" wing whip is for heavy whipping.

Attachments

Insert the attachment with a slight twist to the left so that the stop stud of the attachment is tight against the side of the hole (1, Fig. 2) in the mixer. When in place, tighten the thumb screw (2, Fig. 2). The attachment speed is selected by the transmission shifter handle (1, Fig. 1). It is RECOMMENDED that most chopping operations be carried out in speed #1. For example NEVER operate the chopper attachment faster than #1 when cutting meat. When cutting vegetables it may run at speed #2.

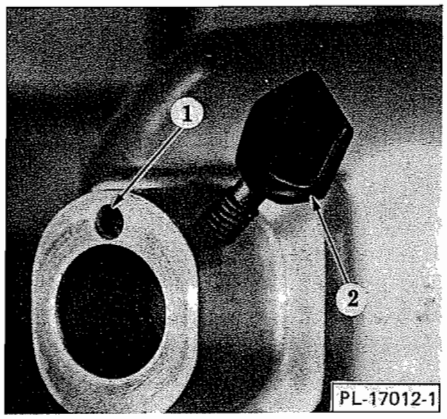

Fig. 2

Use the mixer "ON-OFF" switch to start and stop attachments. Always stop the mixer before changing the speeds of an attachment.

NOTE: If the Speed Drive Attachment is to be used, the mixer MUST be bolted down.

The speed drive may be used with the vegetable slicer to increase the speed of operation. DO NOT use any other attachment with the speed drive.

Mixing

Refer to data plate (5, Fig. 1) to determine specific model identification. Then refer to the paragraphs below that correspond with the model identification.

A-200; A-200F; A-200D; A-200FD

Set the shifter handle (1, Fig. 3) at the desired speed and turn the "ON-OFF" switch (2, Fig. 3) "ON" to start mixer.

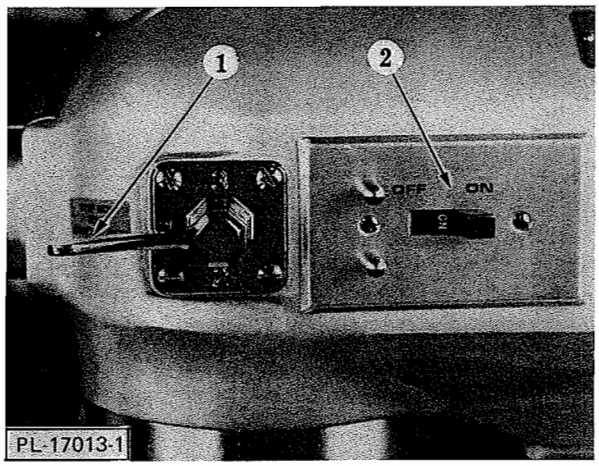

Fig. 3

To change speeds, turn the mixer "OFF". Move the shifter handle (1, Fig. 3) to the desired speed and turn mixer "ON".

A-200T; A-200FT; A-200DT; A-200FDT

For non-timed operation, set the shifter handle (1, Fig. 4) at the desired speed, set the timer (3, Fig. 4) on "Hold" and turn the "ON-OFF" switch (2, Fig. 4) "ON".

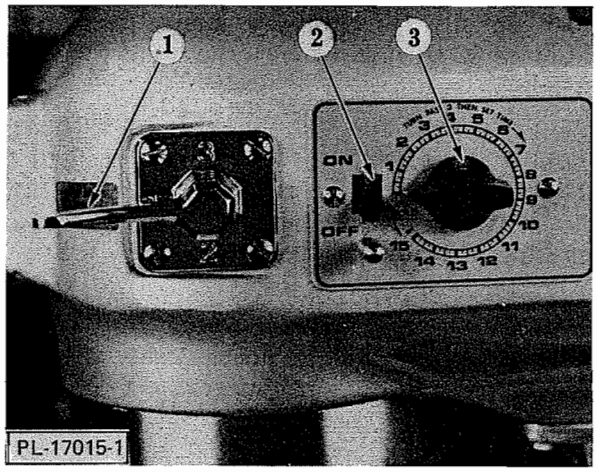

Fig. 4

For timed operation, set the timer (3, Fig. 4) for the desired time (if less than 3 min. turn past 3 and back to desired time) and turn the ON-OFF switch (2, Fig. 4) "ON".

To change speeds, turn the mixer "OFF". Move the shifter handle (1, Fig. 4) to the desired speed and turn the mixer "ON".

AS-200; AS-200F; AS-200D; AS-200FD

With the two speed motor, this mixer has the special feature of being able to initially stir or blend the ingredients slowly at half speed (prevents splashing) before mixing at regular speeds. Set the shifter handle (1, Fig. 5) at the desired mixing speed. Press the "Stir" side of the switch (2, Fig. 5) and hold until stirring operation is complete. Next press the "ON" side of the switch (2, Fig. 5) for regular mixing (it is not necessary to hold this position). To stop regular mixing press the "Stir" side of the switch and release. To change transmission speeds, turn mixer off. Move shifter handle (1, Fig. 5) to desired speed then restart mixer.

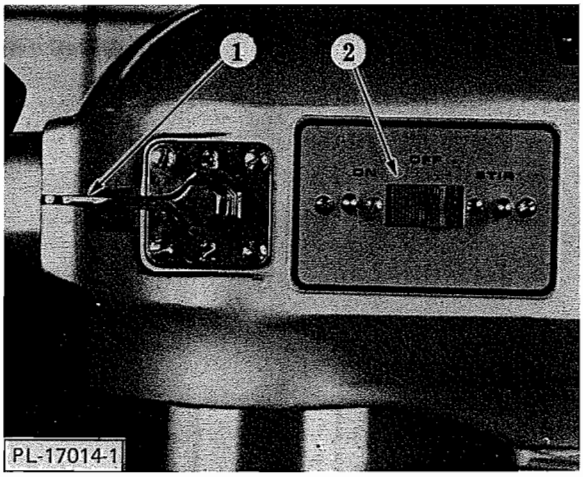

Fig. 5

AS-200T; AS-200FT; AS-200DT; AS-200FDT

With the two speed motor, this mixer has the special feature of being able to initially stir or blend the ingredients at half speed (prevents splashing) before mixing at regular speeds. Set the shifter handle (1, Fig. 6) at the desired speed. Set the timer on "Hold". Press the "Stir" side of the switch (2, Fig. 6) and hold until stirring operation is complete. Next press the "ON" side of the switch for regular mixing (it is not necessary to hold this position). To stop mixer, press the "Stir" side of the switch and release.

For timed operation, place the shifter handle (1, Fig. 6) in the desired speed. Set the timer (3, Fig. 6) to the desired time (if less than 3 min. turn past 3 and back to desired time). Next press the "ON" side of the switch (2, Fig. 6) to start the mixer.

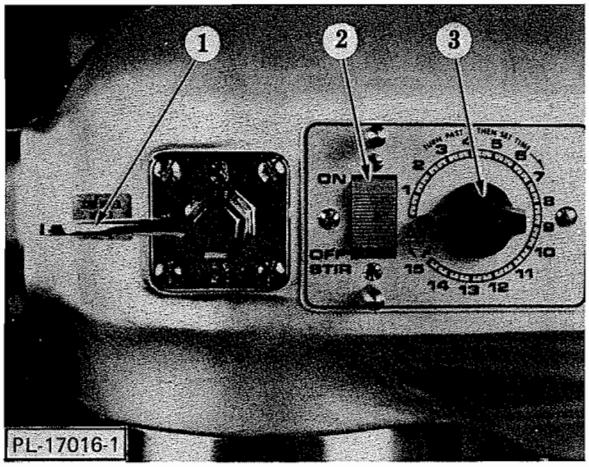

Fig. 6

The mixer will run for the preset length of time. "Stir" mode operation is unchanged when using the timer.

To change transmission speed, turn mixer off. Move the shifter handle to the desired speed and restart.

MAINTENANCE

Cleaning

WARNING: Disconnect power supply before beginning any maintenance procedure.

The mixer should be wiped down with a damp towel after each mixing operation. The mixing bowl, beaters or attachments should be thoroughly washed and rinsed at the end of each operation. The mixer, any attachments or accessories that were used should be thoroughly washed and rinsed at the end of each working shift or whenever the machine is to be out of service for long periods of time (overnight).

Lubrication

WARNING: Disconnect power supply before beginning any maintenance procedure.

The motor has grease packed ball bearings and requires little attention. The transmission gearing is packed with special grease that will last for several years. When grease is needed for replacement, it should be ordered from your local Hobart Representative. Lubricate the bowl slideways (4, Fig. 1) occasionally by applying a small amount of Lubriplate 630AA grease with the tip of the finger.

The polished drip cup (10, Fig. 1) is a safe-guard to prevent any lubricant that might work out of the planetary gearing from dropping into the bowl. Remove the drip cup (by pulling straight down) once a month and wipe it clean.

NOTE: On all "D" (Deluxe) models, lubricate the bowl slideways (4, Fig. 1) occasionally with a few drops of oil in the bowl support oilers (9, Fig. 1).

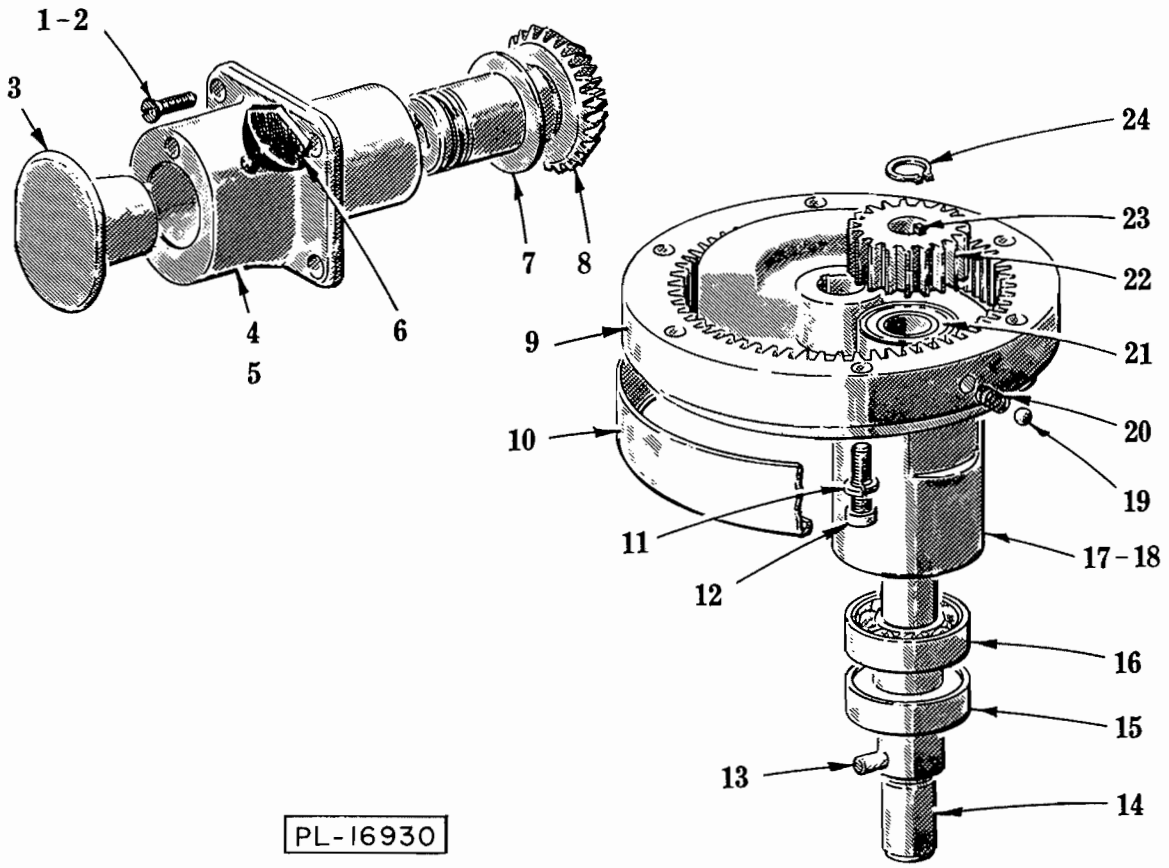

PLANETARY AND ATTACHMENT HUB UNIT

ILLUS. PL-16930	PART NO.	NAME OF PART	AMT.
1	SC-13-71	Mach. Screw - #12-24 x 3/4" Flat Hd. (Painted)	4
2	SC-14-54	Mach. Screw - #12-24 x 3/4" Flat Hd. (Deluxe)	4
3	C-114832-2	Plug - Attachment Hub	1
4	R-12686-4	Hub - Attachment (Painted)	1
5	R-12686-3	Hub - Attachment (Deluxe)	1
6	C-108197-1	Thumb Screw Assy	1
7	M-12746	Washer - Thrust (Give Thk.)	AR
8	M-24889	Bevel Drive Gear Assy. (35T)	1
9	P-15216-1	Internal Gear Assy. (63T) (Incls. items #19 & 20)	1
10	P-15214	Cup - Drip	1
11	WL-3-35	Lock Washer - 1/4" High Collar	6
12	SC-40-9	Cap Screw - 1/4"-20 x 1-1/4" Fil. Hd	6
13	M-65062-1	Pin	1
14	A-113936	Agitator Shaft Assy. (Incls. item #13)	1
15	M-23482	Seal - Oil (1" I.D.)	1
16	BB-20-6	Ball Bearing - N.D. #7504	1
17	S-23166-1	Planetary (Painted)	1
18	S-23166-4	Planetary (Deluxe)	1
19	BA-2-9	Ball - 1/4" Dia	2
20	V-7094	Spring	2
21	BB-17-12	Ball Bearing - N.D. #7503	1
22	M-15217	Pinion - Beater (19T)	1
23	R-12430-55	Key	1
24	RR-4-18	Retaining Ring	1
	A-102778-1	Planetary Assy. (Painted) (Incls. items #14, 15, 16, 17, 21, 22, 23 & 24)	1
	A-102778-2	Planetary Assy. (Deluxe) (Incls. items #14, 15, 16, 18, 21, 22, 23 & 24)	1

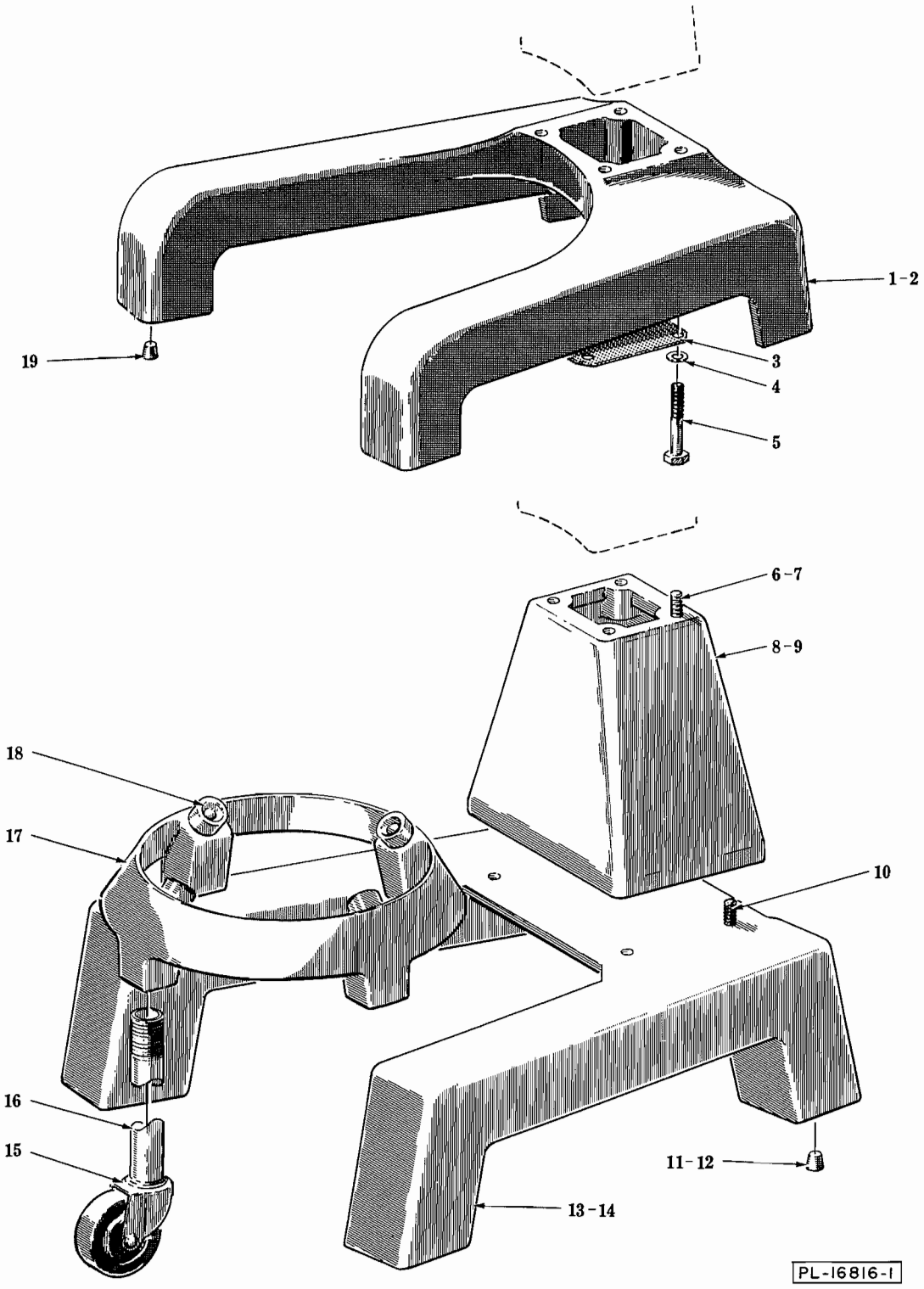

BASE UNIT

BASE UNIT

ILLUS. PL-16816-1	PART NO.	NAME OF PART	AMT.
*1	B-118120-4	Base (Painted)	1
*2	B-118120-2	Base (Deluxe)	1
*3	B-108159	Screen - Air	1
*4	WS-18-19	Washer	4
*5	SC-97-53	Cap Screw - 3/8"-16 x 2-1/4" Hex Hd	4
**6	SC-62-27	Cap Screw - 3/8"-16 x 1-3/4" Hex Hd	4
**7	WS-18-19	Washer	4
**8	T-74998-4	Block - Riser (Painted)	1
**9	T-74998-3	Block - Riser (Deluxe)	1
**10	SC-62-22	Cap Screw - 3/8"-16 x 1-1/4" Hex Hd	4
**11	B-114992	Plug - Base	4
**12	A-116395	Plug - Base (Deluxe)	4
**13	B-110146-2	Base Assy. (Painted)	1
**14	E-110155	Base Assy. (Deluxe)	1
**15	P-87668-1	Caster - Bowl Truck	4
**16	P-70590-2	Leg - Bowl Truck	4
**17	S-70593-4	Bowl Truck Assy. (Incls. items #15, 16 & 18)	1
**18	B-18682-1	Bumper	4
*19	B-114992	Plug - Base	4

*Bench Type Model.
**Floor Type Model.

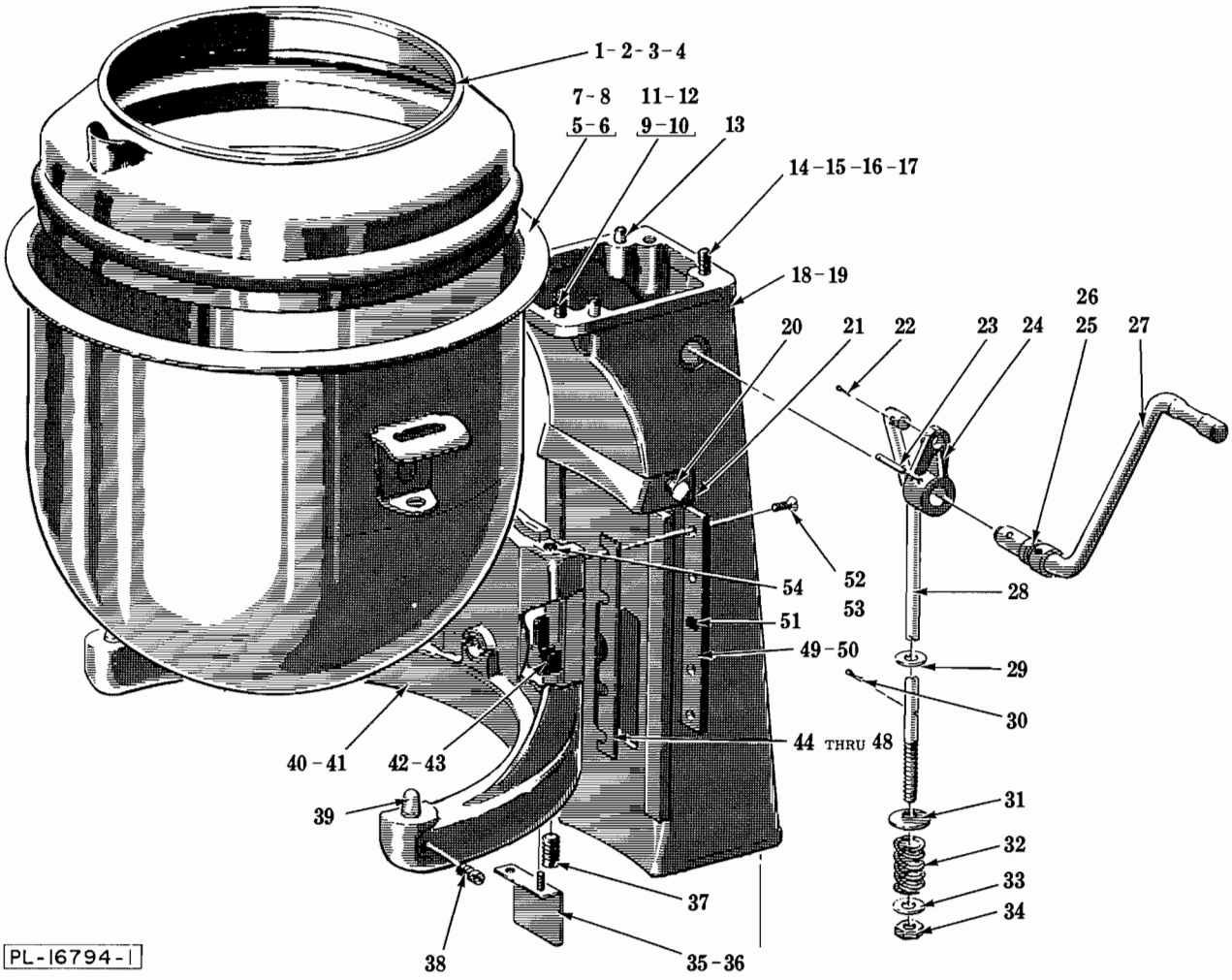

PEDESTAL AND BOWL UNIT

PEDESTAL AND BOWL UNIT

ILLUS. PL-16794-1	PART NO.	NAME OF PART	AMT.
1	S-20531-1	Splash Cover & Bowl Extension (20 Qt.) (Tinned)	1
2	S-20531-2	Splash Cover & Bowl Extension (20 Qt.) (SST)	1
3	R-86069-1	Cover - Splash (12 Qt.) (Tinned)	1
4	R-86069-2	Cover - Splash (12 Qt.) (SST)	1
5	S-62103	Bowl Assy. (20 Qt.) (Tinned)	1
6	S-62104	Bowl Assy. (20 Qt.) (SST)	1
7	S-15360	Bowl Assy. (12 Qt.) (Tinned)	1
8	S-23441	Bowl Assy. (12 Qt.) (SST)	1
9	SC-36-27	Cap Screw - 5/16"-18 x 1" Hex Hd. (Painted)	2
10	WL-3-43	Lock Washer - 5/16" Light (Painted)	2
11	SC-62-61	Cap Screw - 5/16"-18 x 1" Hex Hd. (Deluxe)	2
12	WL-6-22	Lock Washer - 5/16" Light (Deluxe)	2
13	D-11800-116	Dowel	2
14	SC-8-92	Mach. Screw - 5/16"-18 x 1" Rd. Hd. (Painted)	2
15	WL-3-43	Lock Washer - 5/16" Light (Painted)	2
16	SC-9-98	Mach. Screw - 5/16"-18 x 1" Rd. Hd. (Deluxe)	2
17	WL-6-22	Lock Washer - 5/16" Light (Deluxe)	2
18	T-78635-2	Pedestal (Painted)	1
19	T-78657-2	Pedestal (Deluxe)	1
20	P-70641-11	Thumb Screw - #8-32	2
21	P-78506	Shield - Upper Splash	1
22	PC-3-55	Cotter Pin - 1/8" x 3/4"	1
23	PS-4-15	Spirol Pin - 1/4" Dia. x 1-1/8" Lg	1
24	M-114430	Arm - Bowl Lift	1
25	WS-9-11	Washer	AR
26	WS-9-13	Washer (Fiber)	AR
27	P-114431	Lift Handle Assy	1
28	P-15215	Rod - Bowl Lift	1
29	WS-6-33	Washer (STL.)	AR
30	PC-3-55	Cotter Pin - 1/8" x 3/4"	1
31	V-12745	Washer - Special	1
32	V-12782	Spring	1
33	WS-6-26	Washer	1
34	NS-13-26	Full Nut - 3/8"-24 Hex Fin	1
35	SC-60-56	Mach. Screw - #10-32 x 5/16" Rd. Hd	2
36	P-78505	Shield - Lower Splash	1
37	B-121625	Set Screw - Special	1
38	M-5014-1	Stud - Bowl Jacket Hook	2
39	V-6938-2	Pin - Bowl Locating	2
40	M-24869-1	Bowl Support Assy. (Incls. items #35, 36, 37, 39, 44, 45 & 46) (Painted)	1
41	M-64439	Bowl Support Assy. (Incls. items #35, 36, 37, 39, 42, 43, 44, 45, 46, 50, 53 & 54) (Deluxe)	1
42	M-64419	Felt - Bowl Support (Small) (Deluxe)	2
43	M-64438	Felt - Bowl Support (Large) (Deluxe)	2
44	A-113016-1	Shim - Bowl Support (.003" Thk.)	AR
45	A-113016-4	Shim - Bowl Support (.009" Thk.)	AR
46	A-113016-5	Shim - Bowl Support (.015" Thk.)	AR
47	A-113016-6	Shim - Bowl Support (.005" Thk.)	AR
48	A-113016-7	Shim - Bowl Support (.0075" Thk.)	AR
49	M-111213-1	Gib - Bowl Support (Painted)	2
50	A-107383	Gib Assy. (Incls. item #51) (Deluxe)	2
51	A-64437	Felt - Gib (Deluxe)	2
52	SC-13-49	Mach. Screw - #10-24 x 5/8" Flat Hd. (Painted)	6
53	SC-14-55	Mach. Screw - #10-24 x 5/8" Flat Hd. (Deluxe)	8
54	OG-3-27	Oiler (Deluxe)	2
	A-111676	Shim (Use between Pedestal & Transmission Case)	AR

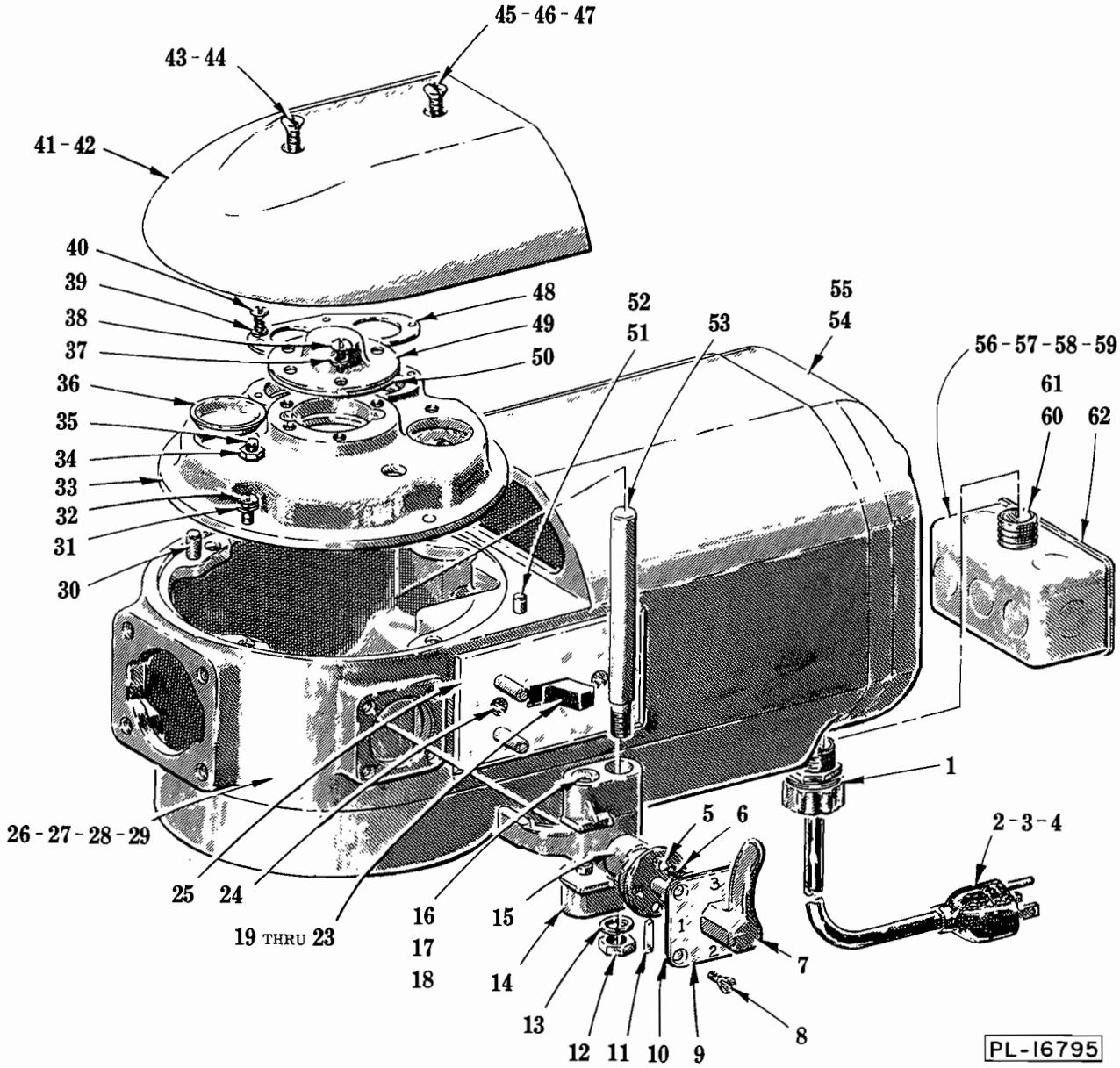

TRANSMISSION CASE AND SHIFTER UNIT (A-200 SERIES)

(SEE PAGE 17 FOR AS-200 SERIES)

TRANSMISSION CASE AND SHIFTER UNIT (A-200 SERIES)

ILLUS. PL-16795	PART NO.	NAME OF PART	AMT.
1	FE-6-31	Connector - Strain Relief (1 Ph.)	1
2	B-117542-7	Cord & Plug Assy. (3 Cond. Under 150 V.) (1 Ph.)	1
3	B-117542-12	Cord & Plug Assy. (3 Cond. 200-250 V.) (1 Ph.)	1
4	B-117542-17	Cord Assy. (I.E.C.)	1
5	BA-2-9	Ball - 1/4" Dia	2
6	V-111170	Spring - Detent	2
7	C-114505	Handle - Shifter	1
8	SC-30-24	Mach. Screw - #10-24 x 1/2" Oval Hd	4
9	P-12726-1	Plate - Shifter Index	1
10	M-23946	Gasket - Shifter Index Plate	1
11	PS-3-8	Spirol Pin - 1/8" Dia. x 3/4" Lg	1
12	NS-13-22	Full Nut - 3/8"-16 Hex Fin	1
13	WL-4-2	Lock Washer - 3/8" Light	1
14	P-13160	Yoke - Shifter	1
15	B-114506	Cam - Gear Shifter	1
16	V-12733	Plunger - Shifter Yoke	2
17	V-12734	Spring - Shifter Yoke	2
18	V-12732	Retainer - Spring (Shifter Yoke)	2
19	P-87711-99-4	Switch (1Ph.)	1
20	P-87711-57-1	Switch (3 Ph.)	1
21	P-87810-19-1	Switch - Thermal Overload (1 Ph.)	1
22	P-16504	Insulator - Switch	2
23	M-74835	Screw - Switch Mounting	2
24	SC-30-6	Mach. Screw - #6-32 x 3/8" Oval Hd	2
25	B-124564-2	Switch Plate Assy	1
26	E-118039-2	Case - Transmission (Painted)	1
27	D-106151-7	Transmission Case Assy. (Deluxe) (Incls. items #42 & 52)	1
28	PL-3-14	Plug - 15/16" Dia. Expansion	1
29	PL-3-28	Plug - 1-5/16" Dia. Expansion	1
30	D-11800-116	Dowel	1
31	WL-3-28	Lock Washer - #12 Light	4
32	SC-8-51	Mach. Screw - #12-24 x 3/4" Rd. Hd	4
33	P-67750	Transmission Shaft Support & Screw Assy. (Incls. items #34 & 35)	1
34	NS-9-36	Mach. Nut - #12-24 Hex	1
35	SC-8-56	Mach. Screw - #12-24 x 1-1/2" Rd. Hd	1
36	M-64871	Plug - Friction	2
37	WL-3-28	Lock Washer - #12 Light	3
38	SC-8-48	Mach. Screw - #12-24 x 1/2" Rd. Hd	3
39	WL-3-22	Lock Washer - #10 Light	4
40	SC-7-74	Mach. Screw - #10-24 x 3/8" Rd. Hd	4
41	S-18231-3	Cover - Transmission Case (Painted)	1
42	S-12691-6	Cover - Transmission Case (Deluxe)	1
43	SC-13-73	Mach. Screw - #12-24 x 1-1/4" Flat Hd. (Painted)	1
44	SC-16-17	Mach. Screw - #12-24 x 1-1/4" Oval Hd. (Deluxe)	1
45	SC-13-74	Mach. Screw - #12-24 x 1-1/2" Flat Hd. (Painted)	1
46	SC-15-57	Mach. Screw - #12-24 x 1-1/2" Oval Hd. (Deluxe)	1
47	NS-9-36	Mach. Nut - #12-24 Hex	2
48	M-12708	Retainer - Twin Bearing	1
49	M-20394-1	Cap - Bearing Retainer	1
50	M-20395	Retainer - Bearing	1
51	D-11800-61	Dowel (Painted)	2
52	M-64303	Dowel (Deluxe)	2
53	M-12735	Rod - Shifter Guide	1
54	ML-17273	Motor (Give Elec. Spec.) (Painted)	1
55	ML-16349	Motor (Give Elec. Spec.) (Deluxe)	1
56	FE-3-19	Box - Junction (3 Ph.)	1
57	C-118544-1	Lug - Solderless (3 Ph.)	1
58	SD-24-1	Self-Tapping Screw - #10-24 x 3/8" Pan Hd. "Taptite" (3 Ph.)	1
59	WL-7-12	Lock Washer - #10 Ext. Shakeproof (3 Ph.)	1
60	M-63849-1	Bushing - Conduit (3 Ph.)	1
61	WL-8-46	Lock Washer - 7/8" Int. Shakeproof (3 Ph.)	1
62	FE-4-1	Cover - Junction Box (3 Ph.)	1
	M-79999	Shifter Assy. (Incls. items #5, 6, 7, 9, 11 & 15)	1
	M-88795	Shifter Yoke Assy. (Incls. items #14, 16, 17 & 18)	1
	SC-29-18	Mach. Screw - #8-32 x 1/2" Flat Hd. (Ground Screw for Supply Line) (1 Ph.)	1
	WL-10-1	Lock Washer - #8 Ext. Shakeproof (Ground Screw) (1 Ph.)	2
	NS-10-11	Mach. Nut - #8-32 Hex (Ground Screw) (1 Ph.)	1

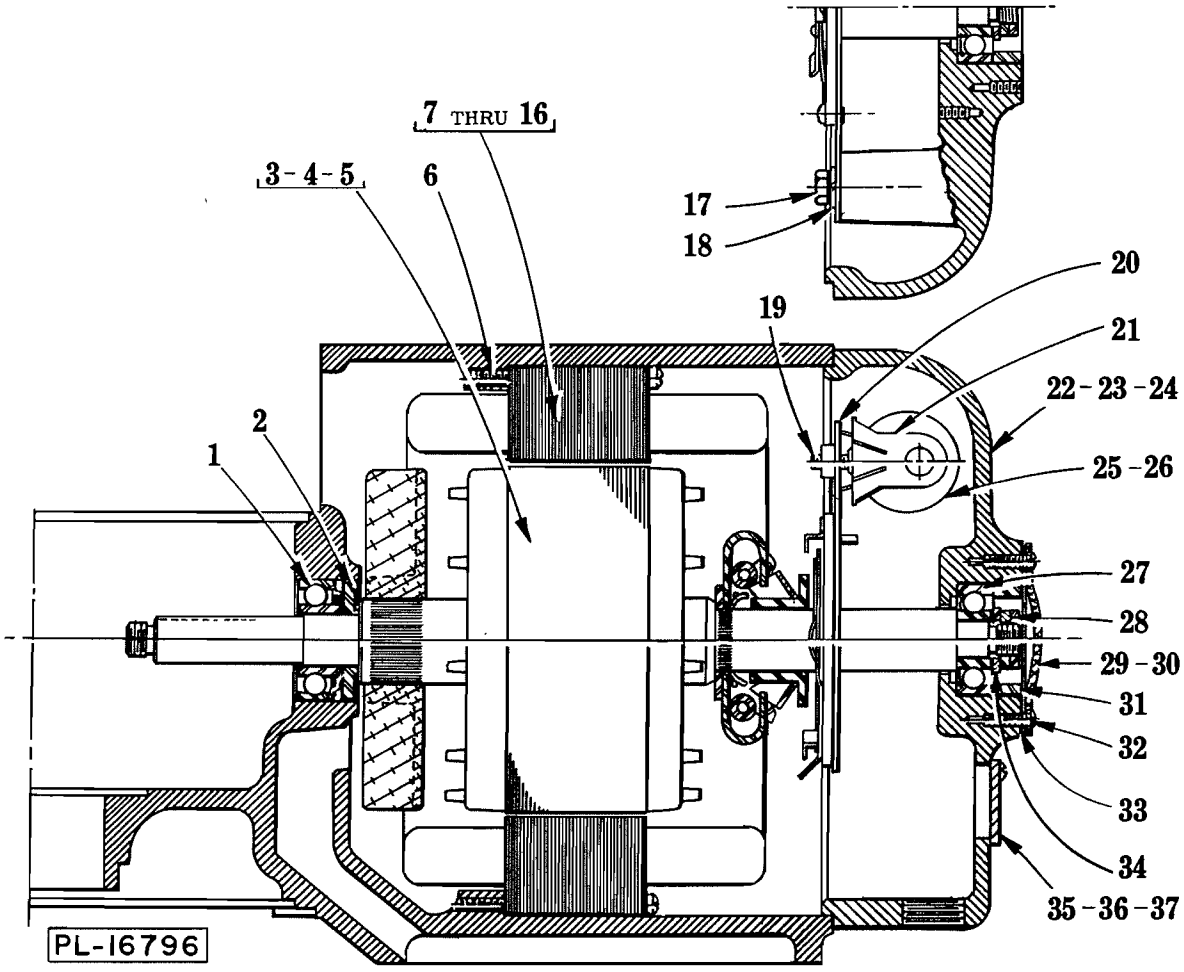

MOTOR UNIT (A-200 SERIES)
SEE PAGE 19 FOR AS-200 SERIES)

MOTOR UNIT (A-200 SERIES)

ILLUS. PL-16796	PART NO.	NAME OF PART	AMT.
1	BB-16-9	Ball Bearing - N.D. #C8503	1
2	M-13174-1	Deflector - Grease	1
3	P-22275-106	Rotor Assy. (60 Hz., 1 Ph.)	1
4	P-22275-107	Rotor Assy. (50 Hz., 1 Ph.)	1
5	P-15747-207	Rotor Assy. (3 Ph.)	1
6	SC-12-59	Mach. Screw - #10-24 x 2-1/4" Fil. Hd	4
7	P-65477-65-1	Stator Assy. (115 V., 60 Hz., 1 Ph.)	1
8	P-65477-65-2	Stator Assy. (200 V., 60 Hz., 1 Ph.)	1
9	P-65477-65-3	Stator Assy. (230 V., 60 Hz., 1 Ph.)	1
10	P-65477-65-4	Stator Assy. (115 V., 50 Hz., 1 Ph.)	1
11	P-65477-65-5	Stator Assy. (220 V., 50 Hz., 1 Ph.)	1
12	P-65478-13-1	Stator Assy. (200 V., 60 Hz., 3 Ph.)	1
13	P-65478-13-2	Stator Assy. (230 V., 60 Hz., 3 Ph.)	1
14	P-65478-13-3	Stator Assy. (460 V., 60 Hz., 3 Ph.)	1
15	P-65478-13-4	Stator Assy. (220 V., 50 Hz., 3 Ph.)	1
16	P-65478-13-5	Stator Assy. (380 V., 50 Hz., 3 Ph.)	1
17	SC-62-20	Cap Screw - 1/4"-20 x 3/8" Hex Hd. (1 Ph.)	2
18	WL-3-38	Lock Washer - 1/4" Medium (1 Ph.)	2
19	SC-14-57	Mach. Screw - #10-24 x 1/2" Flat Hd. (1 Ph.)	2
20	B-278490-1	Switch Plate Assy. (1 Ph.)	1
21	P-66621-1	Bracket - Capacitor (1 Ph.)	1
22	E-114037-6	Bracket - Bearing (Painted)	1
23	E-114037-5	Bracket - Bearing (Deluxe)	1
24	SC-16-31	Mach. Screw - #12-24 x 2" Oval Hd	4
25	D-70487-18	Capacitor (1 Ph.)	1
26	M-66622-1	End Cap - Capacitor (1 Ph.)	1
27	BB-17-5	Ball Bearing - N.D. #7601	1
28	V-11430	Nut - Special	2
29	B-103134-2	Cap - Cover (Painted)	1
30	B-103134-1	Cap - Cover (Deluxe)	1
31	V-12669	Spacer - Bearing	1
32	SC-10-32	Mach. Screw - #8-32 x 3/8" Truss Hd	4
33	V-24464	Gasket - Cover Cap	1
34	WS-7-9	Washer - Special	1
35	FE-4-3	Cover - Conduit (Painted)	1
36	B-115231-2	Cover - Conduit (Deluxe)	1
37	SC-21-7	Mach. Screw - #6-32 x 1/4" Rd. Hd. (Deluxe)	2

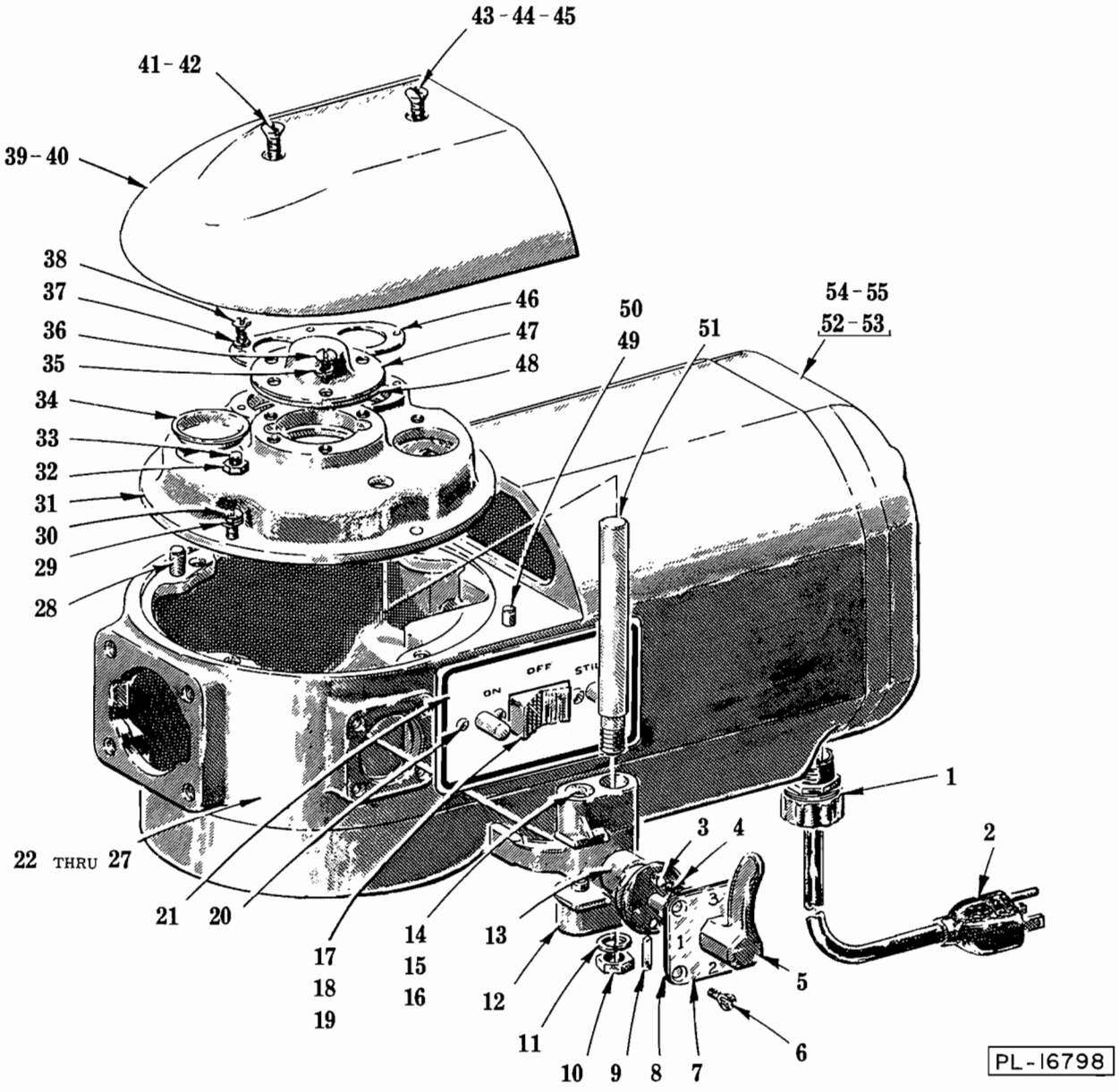

TRANSMISSION CASE AND SHIFTER UNIT (AS-200 SERIES)

(SEE PAGE 13 FOR A-200 SERIES)

TRANSMISSION CASE AND SHIFTER UNIT (AS-200 SERIES)

ILLUS. PL-16798	PART NO.	NAME OF PART	AMT.
1	FE-6-31	Connector - Strain Relief	1
2	B-117542-5	Cord & Plug (3 Cond. Under 150 V.)	1
3	BA-2-9	Ball - 1/4" Dia	2
4	V-111170	Spring - Detent	2
5	C-114505	Handle - Shifter	1
6	SC-30-24	Mach. Screw - #10-24 x 1/2" Oval Hd	4
7	P-12726-1	Plate - Shifter Index	1
8	M-23946	Gasket - Index Plate	1
9	PS-3-8	Spirol Pin - 1/8" Dia. x 3/4" Lg	1
10	NS-13-22	Full Nut - 3/8"-16 Hex Fin	1
11	WL-4-2	Lock Washer - 3/8" Light	1
12	P-13160	Yoke - Shifter	1
13	B-114506	Cam - Gear Shifter	1
14	V-12733	Plunger - Shifter Yoke	2
15	V-12734	Spring - Shifter Yoke	2
16	V-12732	Retainer - Spring	2
17	P-87711-82-1	Switch - Rockette (D.P.D.T.)	1
18	P-16504	Insulator - Switch	2
19	SC-15-8	Mach. Screw - #6-32 x 1/4" Oval Hd	2
20	B-123109	Mach. Screw - #6-32 x 3/8" Truss Hd. "Taptite"	2
21	C-124568	Switch Plate Assy	1
22	E-118039-2	Transmission Case (Painted)	1
23	C-106993-3	Transmission Case (Timed) (Painted)	1
24	D-106151-7	Transmission Case Assy. (Deluxe) (Incls. items #40 & 50)	1
25	D-106151-8	Transmission Case Assy. (Timed) (Deluxe) (Incls. items #40 & 50)	1
26	PL-3-14	Plug - 15/16" Dia. Expansion	1
27	PL-3-28	Plug - 1-5/16" Dia. Expansion	1
28	D-11800-116	Dowel	1
29	WL-3-28	Lock Washer - #12 Light	4
30	SC-8-51	Mach. Screw - #12-24 x 3/4" Rd. Hd	4
31	P-67750	Transmission Shaft Support & Screw Assy. (Incls. items #32 & 33)	1
32	NS-9-36	Mach. Nut - #12-24 Hex	1
33	SC-8-56	Mach. Screw - #12-24 x 1-1/2" Rd. Hd	1
34	M-64871	Plug - Friction	2
35	WL-3-28	Lock Washer - #12 Light	3
36	SC-8-48	Mach. Screw - #12-24 x 1/2" Rd. Hd	3
37	WL-3-22	Lock Washer - #10 Light	4
38	SC-7-74	Mach. Screw - #10-24 x 3/8" Rd. Hd	4
39	S-18231-3	Cover - Transmission Case (Painted)	1
40	S-12691-6	Cover - Transmission Case (Deluxe)	1
41	SC-13-73	Mach. Screw - #12-24 x 1-1/4" Flat Hd. (Painted)	1
42	SC-16-17	Mach. Screw - #12-24 x 1-1/4" Oval Hd. (Deluxe)	1
43	SC-13-74	Mach. Screw - #12-24 x 1-1/2" Flat Hd. (Painted)	1
44	SC-15-57	Mach. Screw - #12-24 x 1-1/2" Oval Hd. (Deluxe)	1
45	NS-9-36	Mach. Nut - #12-24 Hex	2
46	M-12708	Retainer - Twin Bearing	1
47	M-20394-1	Cap - Bearing Retainer	1
48	M-20395	Retainer - Bearing	1
49	D-11800-61	Dowel (Painted)	2
50	M-64303	Pin - Cover (Deluxe)	2
51	M-12735	Rod - Shifter Guide	1
52	ML-16350	Motor (Non-Timed) (Painted) (Give Elec. Spec.)	1
53	ML-16351	Motor (Non-Timed) (Deluxe) (Give Elec. Spec.)	1
54	ML-17286	Motor (Timed) (Painted) (Give Elec. Spec.)	1
55	ML-17287	Motor (Timed) (Deluxe) (Give Elec. Spec.)	1
	M-79999	Shifter Assy. (Incls. items #3, 4, 5, 7, 9 & 13)	1
	M-88795	Shifter - Yoke Assy. (Incls. items #12, 14, 15 & 16)	1

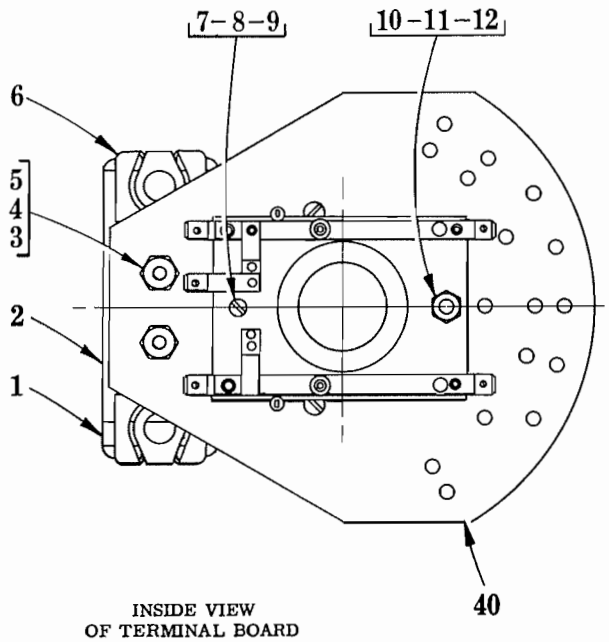

INSIDE VIEW
OF TERMINAL BOARD

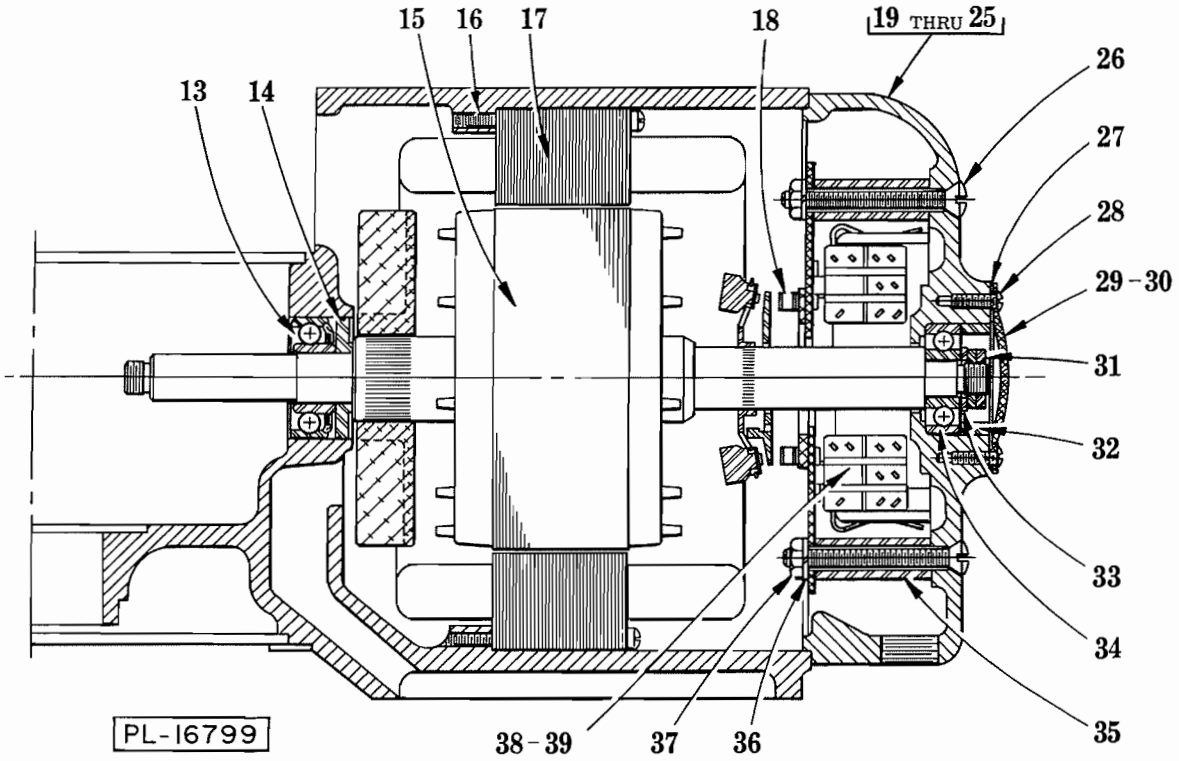

MOTOR UNIT (AS-200 SERIES)

(SEE PAGE 15 FOR A-200 SERIES)

MOTOR UNIT (AS-200 SERIES)

ILLUS. PL-16799	PART NO.	NAME OF PART	AMT.
1	M-66622-1	Cap - Capacitor	1
2	D-70487-18	Capacitor	1
3	SC-14-57	Mach. Screw - #10-24 x 1/2" Flat Hd	2
4	WL-4-40	Lock Washer - #10 Medium	2
5	NS-9-22	Mach. Nut - #10-24 Hex	2
6	P-66621-1	Bracket - Capacitor	1
7	SC-9-79	Mach. Screw - #6-32 x 5/16" Rd. Hd	1
8	WL-3-9	Lock Washer - #6 Medium	1
9	NS-9-7	Mach. Nut - #6-32 Hex	1
10	M-77814	Stud - Terminal Board	1
11	WL-3-9	Lock Washer - #6 Medium	1
12	NS-9-7	Mach. Nut - #6-32 Hex	2
13	BB-16-9	Ball Bearing - N.D. #C8503	1
14	M-13174-1	Deflector - Grease	1
15	P-22275-70	Rotor Assy	1
16	SC-12-59	Mach. Screw - #10-24 x 2-1/4" Fil. Hd	4
17	P-65477-71-1	Stator Assy	1
18	M-77780	Switch - Starting (Stationary Part)	1
19	S-101595-5	Bracket - Bearing (Painted)	1
20	C-106152-2	Bracket - Bearing (Deluxe) (Incls. item #22)	1
21	C-23550-4	Cover - Inspection (Painted)	2
22	C-23550-3	Cover - Inspection (Deluxe)	2
23	SC-15-44	Mach. Screw - #10-24 x 1-1/4" Oval Hd	4
24	SC-11-64	Mach. Screw - #12-24 x 1" Fil. Hd	4
25	SC-27-28	Mach. Screw - #8-32 x 1/4" Rd. Hd. (Ground Cord & Plug)	1
26	SC-15-80	Mach. Screw - 1/4"-20 x 2-1/4" Oval Hd	2
27	V-24464	Gasket - Cover Cap	1
28	SC-10-32	Mach. Screw - #8-32 x 3/8" Truss Hd	4
29	B-103134-2	Cap - Cover (Painted)	1
30	B-103134-1	Cap - Cover (Deluxe)	1
31	V-11430	Nut - Special	2
32	V-12669	Spacer - Bearing	1
33	WS-7-9	Washer	1
34	BB-17-5	Ball Bearing - N.D. #7601	1
35	M-77781	Post - Switch Retaining Plate	2
36	WL-3-38	Lock Washer - 1/4" Medium	2
37	NS-I3-2	Full Nut - 1/4"-20 Hex Fin	2
38	P-87714-4-1	Relay	2
39	SC-14-51	Mach. Screw - #6-32 x 3/8" Flat Hd	2
40	R-77807-1	Terminal Board Assy (Incls. items #1 thru 12, 18, 38 & 39)	1

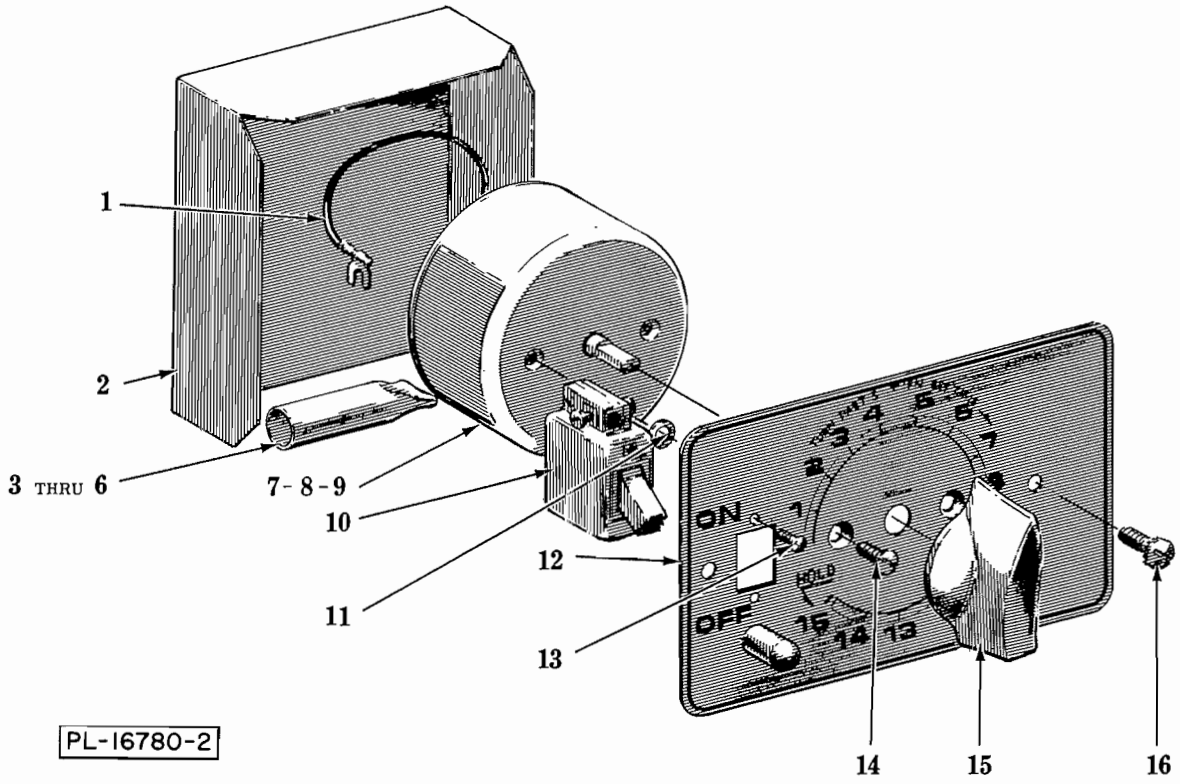

SWITCH AND TIMER UNIT (A-200 SERIES)

ILLUS. PL-16780-2	PART NO.	NAME OF PART	AMT.
1	C-87532-9	Lead (Timer to Switch)	1
2	P-70782	Insulator - Switch	1
3	M-61285-1	Boot - Insulating (Cord & Plug)	1
4	SC-27-28	Mach. Screw - #8-32 x 1/4" Rd. Hd	1
5	WL-10-1	Lock Washer - #8 Ext. Shakeproof	1
6	NS-10-11	Mach. Nut - #8-32 Hex	1
7	A-114720	Timer & Knob Assy. (Incls. items #8, 14 & 15)	1
8	SC-19-36	Mach. Screw - #6-32 x 1/4" Bind. Hd	2
9	WL-10-22	Lock Washer - #6 Ext. Shakeproof	2
10	P-87711-98-1	Switch (Incls. item #13)	1
11	WS-2-18	Washer (Between Timer & Plate)	2
12	C-124566	Switch Plate Assy	1
13	SC-9-87	Mach. Screw - #3-48 x 1/4" Rd. Hd	2
14	SC-13-7	Mach. Screw - #5-40 x 1/4" Flat Hd	2
15	B-114703	Knob - Pointer	1
16	B-123109	Serrated Screw - #6-32 x 3/8" Rd. Hd	2
	M-71291-4	Conversion Kit (1 Ph. ONLY) (Incls. items #1 thru 16)	1

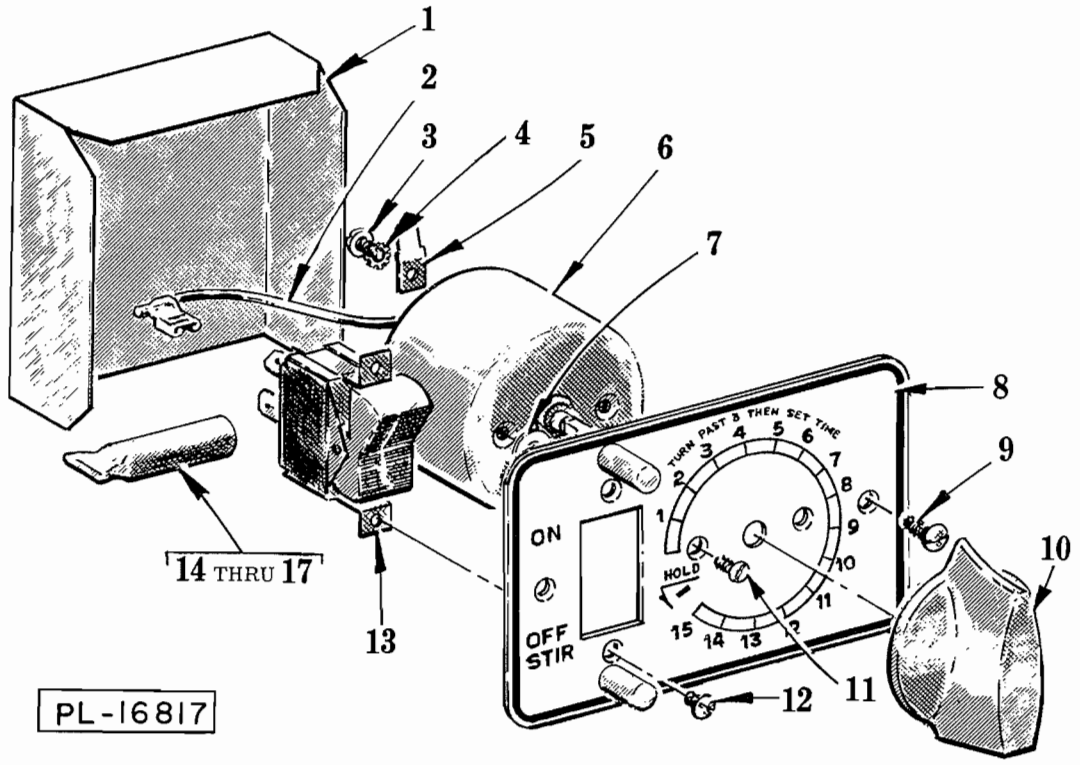

SWITCH AND TIMER UNIT (AS-200)

ILLUS. PL-16817	PART NO.	NAME OF PART	AMT.
1	P-70782	Insulator - Switch	2
2	R-87532-22	Lead (Timer to Switch)	1
3	SC-19-36	Mach. Screw - #6-32 x 1/4" Bind. Hd	2
4	WL-10-22	Lock Washer - #6 Ext. Shakeproof	2
5	M-77805	Terminal - Stationary (Male)	1
6	A-114720	Timer & Knob Assy. (Incls. items #3, 10 & 11)	1
7	WS-2-18	Washer	2
8	C-124570	Switch Plate Assy	1
9	B-123109	Self-Tapping Screw - #6-32 x 3/8" Truss Hd. "Taptite"	2
10	B-114703	Knob - Pointer	1
11	SC-13-7	Mach. Screw - #5-40 x 1/4" Flat Hd	2
12	SC-15-8	Mach. Screw - #6-32 x 1/4" Oval Hd	2
13	P-87711-82-1	Switch - Rockette (D.P.D.T.)	1
14	M-61285-1	Boot - Insulating (Cord & Plug)	1
15	SC-27-28	Mach. Screw - #8-32 x 1/4" Rd. Hd	1
16	WL-10-1	Lock Washer - #8 Ext. Shakeproof	1
17	NS-10-11	Mach. Nut - #8-32 Hex	1

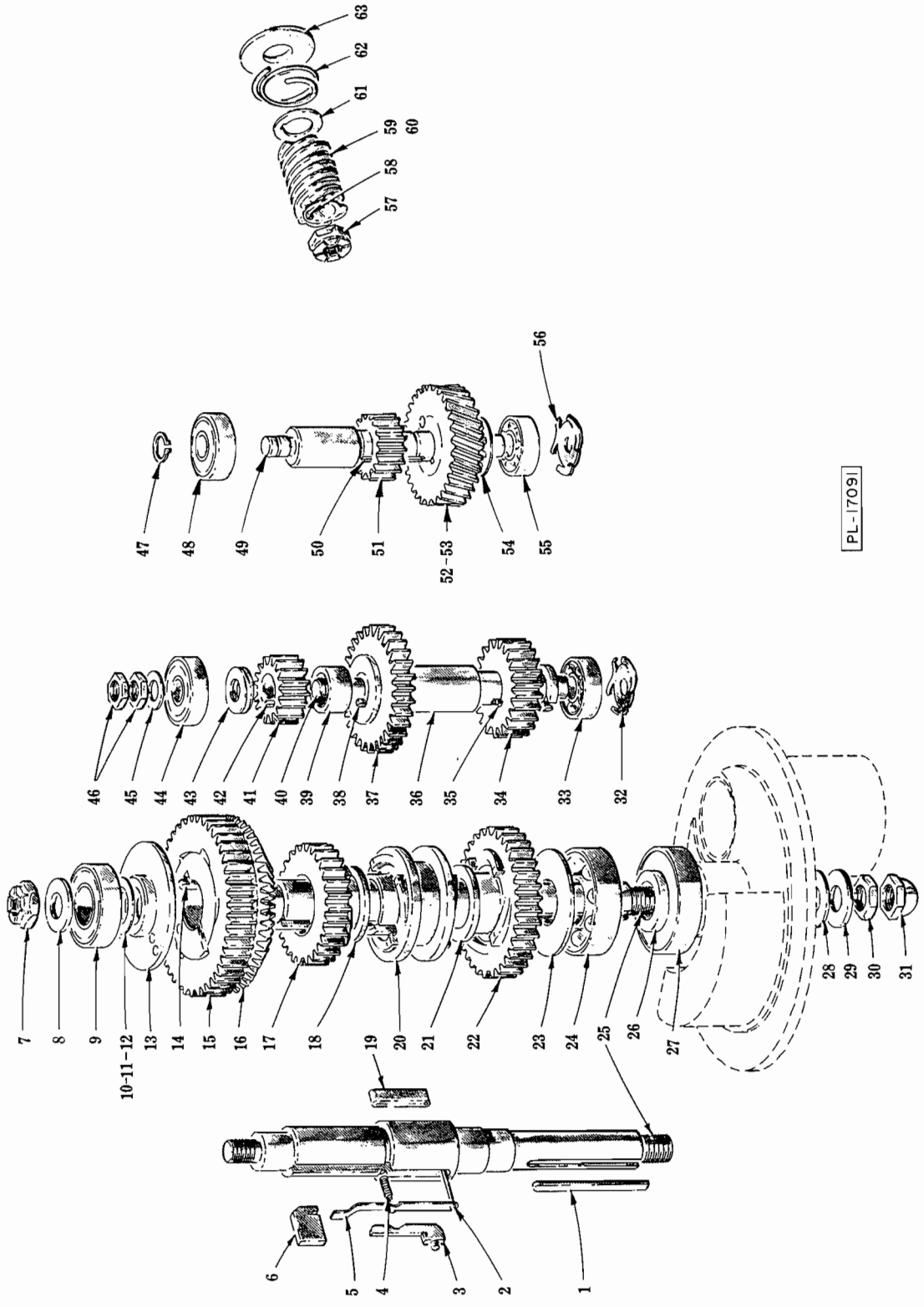

TRANSMISSION GEAR UNIT

TRANSMISSION GEAR UNIT

ILLUS. PL-17091	PART NO.	NAME OF PART	AMT.
1	R-12430-17	Key	1
2	RS-32-10	Rivet	1
3	B-117116	Block - Diving Key Control	1
4	V-12759	Spring	1
5	V-12749	Arm - Diving Key Control	1
6	M-15528	Key - Diving	1
7	NS-32-29	Stop Nut - 1/2"-20 "Flexloc"	1
8	WS-8-13	Washer - Retaining	1
9	BB-20-18	Ball Bearing - N.D. #77503	1
10	WS-10-18	Shim - Brg. (.002" Thk.)	AR
11	WS-10-19	Shim - Brg. (.003" Thk.)	AR
12	WS-10-20	Shim - Brg. (.010" Thk.)	AR
13	A-102777	Spacer & Pin Assy	1
14	R-12430-59	Key	1
15	C-15225	Gear - Slow Speed (46T)	1
16	P-18800	Gear - Zerol Bevel (46T)	1
17	C-12694	Gear - Clutch (29T)	1
18	M-12695	Bearing - Clutch Gear	1
19	V-16577	Key - Special Feather	1
20	C-70035-2	Sleeve - Clutch	1
21	M-12695	Bearing - Clutch Gear	1
22	C-12696	Gear - Clutch (38T)	1
23	M-12723	Spacer - Lower	1
24	BB-20-6	Ball Bearing - N.D. #7504	1
25	R-12750	Shaft - Center	1
26	M-14674	Spacer - Bearing	1
27	A-114695	Seal - Oil	1
28	WS-7-26	Washer (Fiber)	1
29	WS-24-1	Washer - Retaining (STL)	1
30	V-10928-2	Nut - 1/2"-20 Special	1
31	M-24715-3	Acorn Nut - 1/2"-20	1
32	SL-2-8	Spring - Preloading	1
33	BB-5-1	Ball Bearing - N.D. #3200	1
34	C-12699	Gear (23T)	1
35	C-109070-18	Key - Hardened	1
36	V-12697	Spacer - Lower	1
37	C-12700	Gear (32T)	1
38	C-109070-18	Key - Hardened	1
39	V-12698	Spacer - Central	1
40	M-12717	Shaft - Transmission	1
41	C-103960	Gear (15T)	1
42	C-109070-18	Key - Hardened	1
43	V-12744	Spacer - Upper	1
44	BB-5-2	Ball Bearing - N.D. #7500	1
45	WS-6-36	Washer - Retaining	1
46	V-12710	Nut - Retaining	2
47	RR-10-10	Retaining Ring	1
48	BB-5-2	Ball Bearing - N.D. #7500	1
49	C-118239	Shaft - Worm Gear	1
50	R-12430-4	Key	1
51	C-103960	Gear (15T)	1
52	C-118237-1	Worm Wheel & Bushing Assy. (29T) (60 Hz.)	1
53	C-121139-1	Worm Wheel & Bushing Assy. (24T) (50 Hz.)	1
54	RR-10-16	Retaining Ring	1
55	BB-5-1	Ball Bearing - N.D. #3200	1
56	SL-2-8	Spring - Preloading	1
57	NS-32-23	Stop Nut - 7/16"-20 "Flexloc"	1
58	V-12747	Key	1
59	C-12743	Worm (5T) (60 Hz.)	1
60	M-12770	Worm (5T) (50 Hz.)	1
61	V-12754	Washer	1
62	V-12757	Spring - Shock Absorber	1
63	V-12711	Washer - Shock Absorber Spring	1
	P-24551	Center Shaft Assy. Unit (Incls. items #2, 4, 5, 19 & 25)	1
	C-118238-1	Worm Wheel Shaft Assy. (60 Hz.) (Incls. items #49, 50, 51, 52 & 54)	1
	C-118238-2	Worm Wheel Shaft Assy. (50 Hz.) (Incls. items #49, 50, 51, 53 & 54)	1
	A-102774	Gear Assy. (Incls. items #34 thru 43)	1
	A-102776	Center Shaft Assy. (Incls. items #2 thru 6, 13 thru 23 & 25)	1

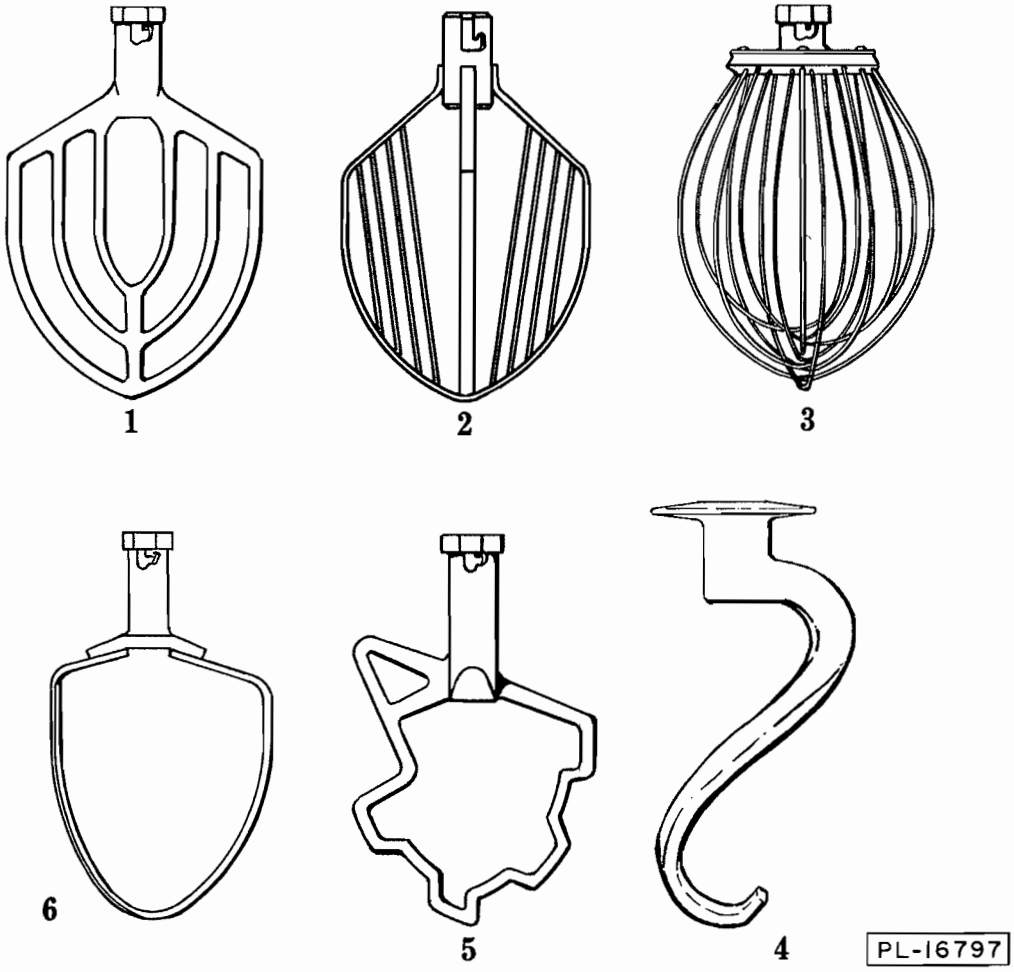

AGITATORS

ILLUS. PL-16797	PART NO.	PART NO.	NAME OF PART	AMT.
	20 QT.	12 QT.		
1	R-23126	R-23502	"B" Flat Beater	1
2	D-123753	– – –	"C" Wing Whip	1
3	R-23511-1	R-23523-1	"D" Wire Whip	1
4	E-119984	S-62886	"ED" Dough Arm	1
5	R-8022	– – –	"S" Sweet Dough Beater	1
6	R-74286	– – –	"P" Pastry Knife	1