HOBART

CATALOG OF REPLACEMENT PARTS

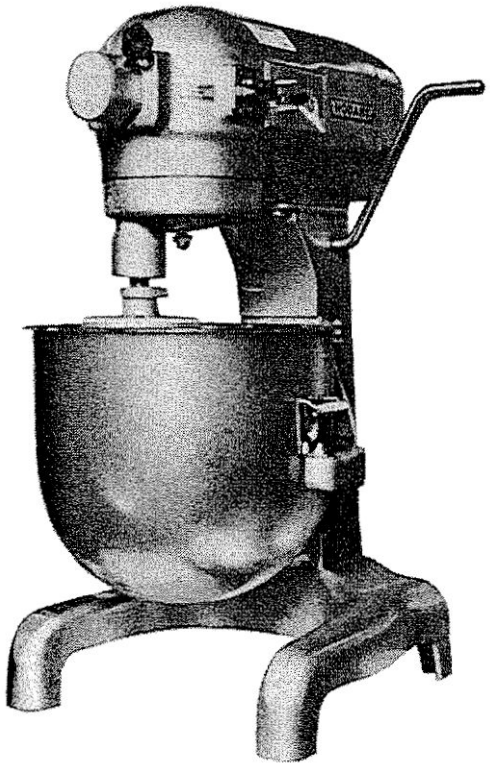

A200 ML- 25278

A product of HOBART 701 S. RIDGE AVENUE TROY, OHIO 45374-0001

FORM 12656 Rev. A (December 2019)

 © HOBART 2019

Table of Contents

5 PLANETARY AND ATTACHMENT HUB UNIT
7 BASE, PEDESTAL AND BOWL UNIT
9 TRANSMISSION CASE AND SHIFTER UNIT
11 MOTOR UNIT F12656
13 TRANSMISSION GEAR UNIT
15 AGITATORS

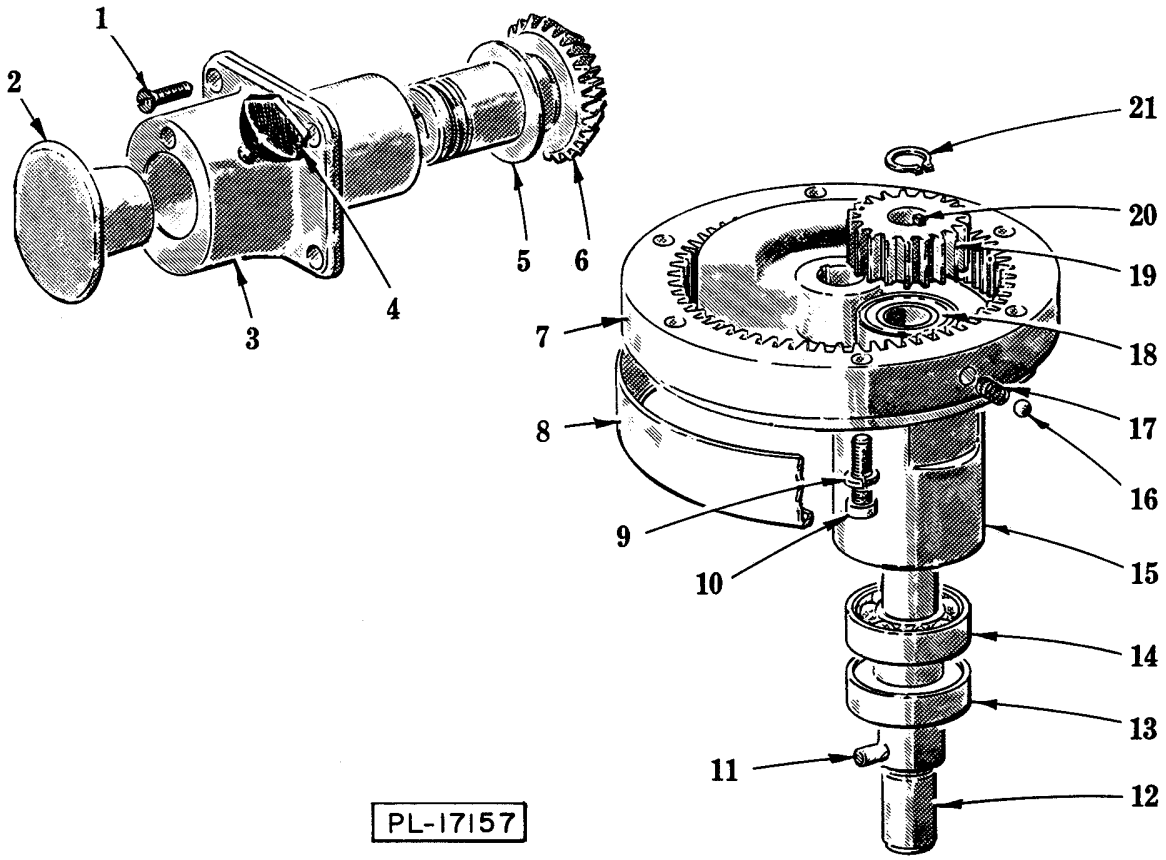

PLANETARY AND ATTACHMENT HUB UNIT

PLANETARY AND ATTACHMENT HUB UNIT

ILLUS. PL-17157	PART NO.	NAME OF PART	AMT.
1	SC-200-13	NLA - Obsolete--Mach. Screw - M.6 x 1 x 20 mm Flat Hd	4
2	C-114832-2	Plug - Attachment Hub	1
3	R-12686-1	Hub - Attachment	1
4	C-108197-1	Thumb Screw Assy	1
5	M-12746	Washer - Thrust (Give Thk.)	AR
6	A-146031	Bevel Drive Gear & Plug Assy. (35T)	1
7	P-15216-1	Internal Gear Assy. Unit (63T) (Incls. items #16 & 17)	1
8	P-15214	Cup - Drip	1
9	WL-3-35	Lock Washer - 1/4" High Collar	6
10	SC-200-5	Cap Screw - M.6 x 1 x 30 mm Soc. Fil. Hd	6
11	M-65062-1	Pin	1
12	A-113936	Agitator Shaft Assy. Unit (Incls. item #11)	1
13	M-23482	Seal - Oil (1" I.D.)	1
14	BB-20-6	Ball Bearing - N.D. #7504	1
15	S-23166-1	Planetary	1
16	BA-2-9	Ball - 1/4" Dia	2
17	V-7094	Spring	2
18	BB-17-12	Ball Bearing - N.D. #7503	1
19	M-15217	Pinion - Beater (19T)	1
20	R-12430-55	Key	1
21	RR-4-18	Retaining Ring	1

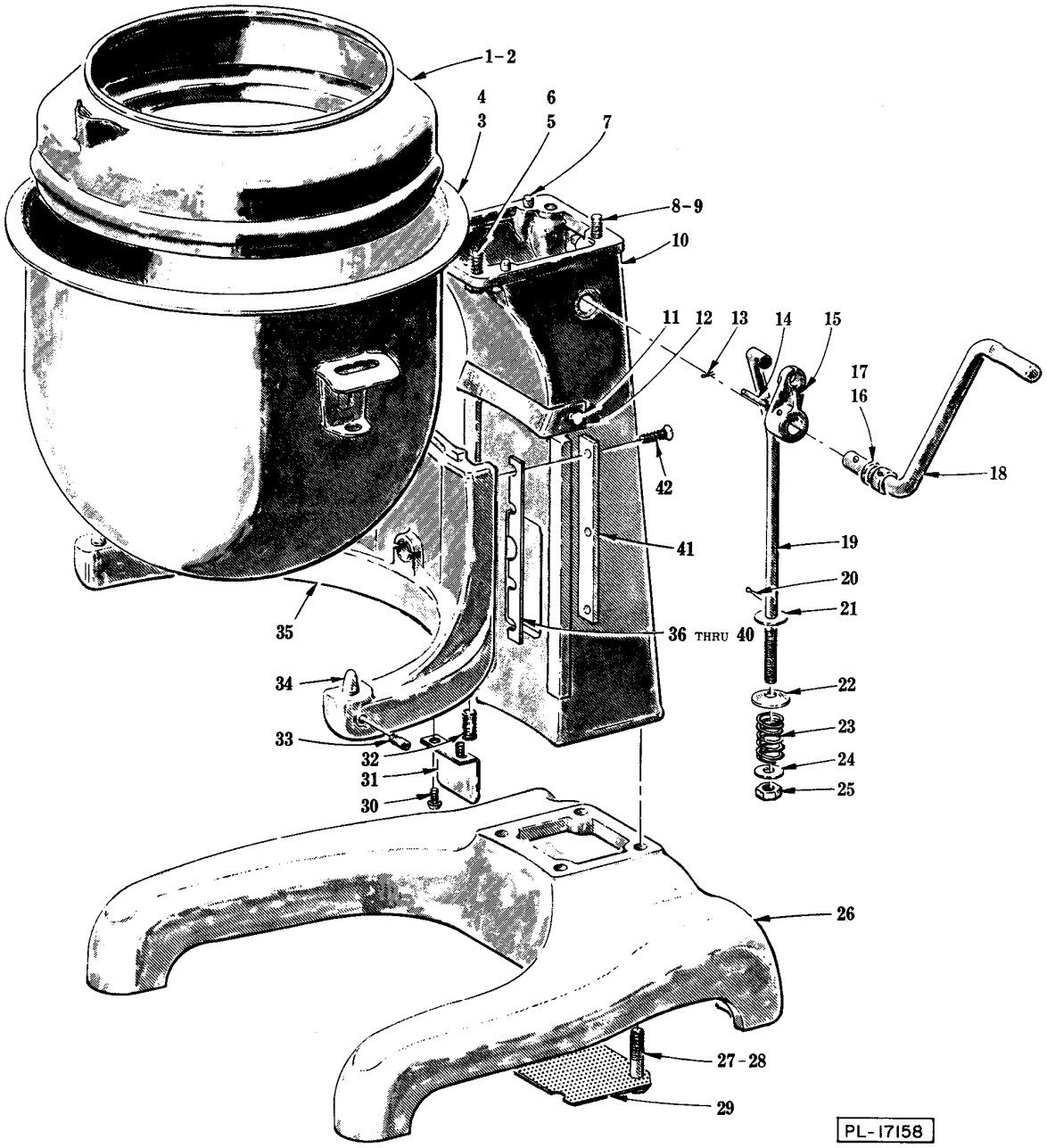

BASE, PEDESTAL AND BOWL UNIT

BASE, PEDESTAL AND BOWL UNIT

ILLUS. PL-17158	PART NO.	NAME OF PART	AMT.
1	S-20531-1	Splash Cover & Bowl Extension (20 Qt.)	1
2	R-86069-1	Cover - Splash (12 Qt.)	1
3	S-62103	Bowl Assy. (20 Qt.)	1
4	S-15360	Bowl Assy. (12 Qt.)	1
5	SC-200-7	Cap Screw - M.8 x 1.25 x 25 mm Hex Hd	2
6	WL-3-43	Lock Washer - 5/16" Light	2
7	D-11800-116	Dowel	2
8	SC-200-8	Cap Screw - M.8 x 1.26 x 25 mm Soc. Hd	2
9	WL-3-43	Lock Washer - 5/16" Light	2
10	T-78635	Pedestal	1
11	B-146041-1	NLA - Obsolete--Thumb Screw	2
12	P-78506	Shield - Upper Splash	1
13	PC-3-55	Cotter Pin - 1/8" x 3/4	1
14	PS-4-15	Spirol Pin - 1/4" Dia. x 1-1/8" Lg	1
15	M-114430	Arm - Bowl Lift	1
16	WS-9-11	Washer (STL)	AR
17	WS-9-13	Washer (Fiber)	AR
18	P-114431	Lift Handle Assy	1
19	P-15215	Rod - Bowl Lift	1
20	PC-3-55	Cotter Pin - 1/8" x 3/4	1
21	WS-6-33	Washer (STL)	AR
22	V-12745	Washer - Special	1
23	V-12782	Spring	1
24	WS-6-26	Washer (STL)	1
25	NS-13-26	Full Nut - 3/8"-24 Hex Fin	1
26	A-123840	NLA - Obsolete--Base Assy	1
27	SC-200-9	Cap Screw -M. 10 x 1.5 x 35 mm Hex Hd	4
28	WL-200-2	Lock Washer - 10 mm Ext. Shakeproof	4
29	B-137130	NLA - Obsolete--Screen - Air	1
30	SC-200-2	Mach. Screw - M.4 x .7 x 10 mm Pan Hd	2
31	P-78505	Shield - Lower Splash	1
32	B-121625	Set Screw - Special	1
33	M-5014-1	Stud - Bowl Jacket Hook	2
34	V-6938-2	Pin - Bowl Locating	2
35	A-123839	Bowl Support Assy. Unit	1
36	A-113016-1	Shim - Bowl Support (.003" Thk.)	AR
37	A-113016-4	Shim - Bowl Support (.009" Thk.)	AR
38	A-113016-5	Shim - Bowl Support (.015" Thk.)	AR
39	A-113016-6	Shim - Bowl Support (.005" Thk.)	AR
40	A-113016-7	Shim - Bowl Support (.0075" Thk.)	AR
41	M-111213-1	Gib - Bowl Support	2
42	SC-200-11	Mach. Screw - M.5 x 1 x 16 mm Flat Hd	6

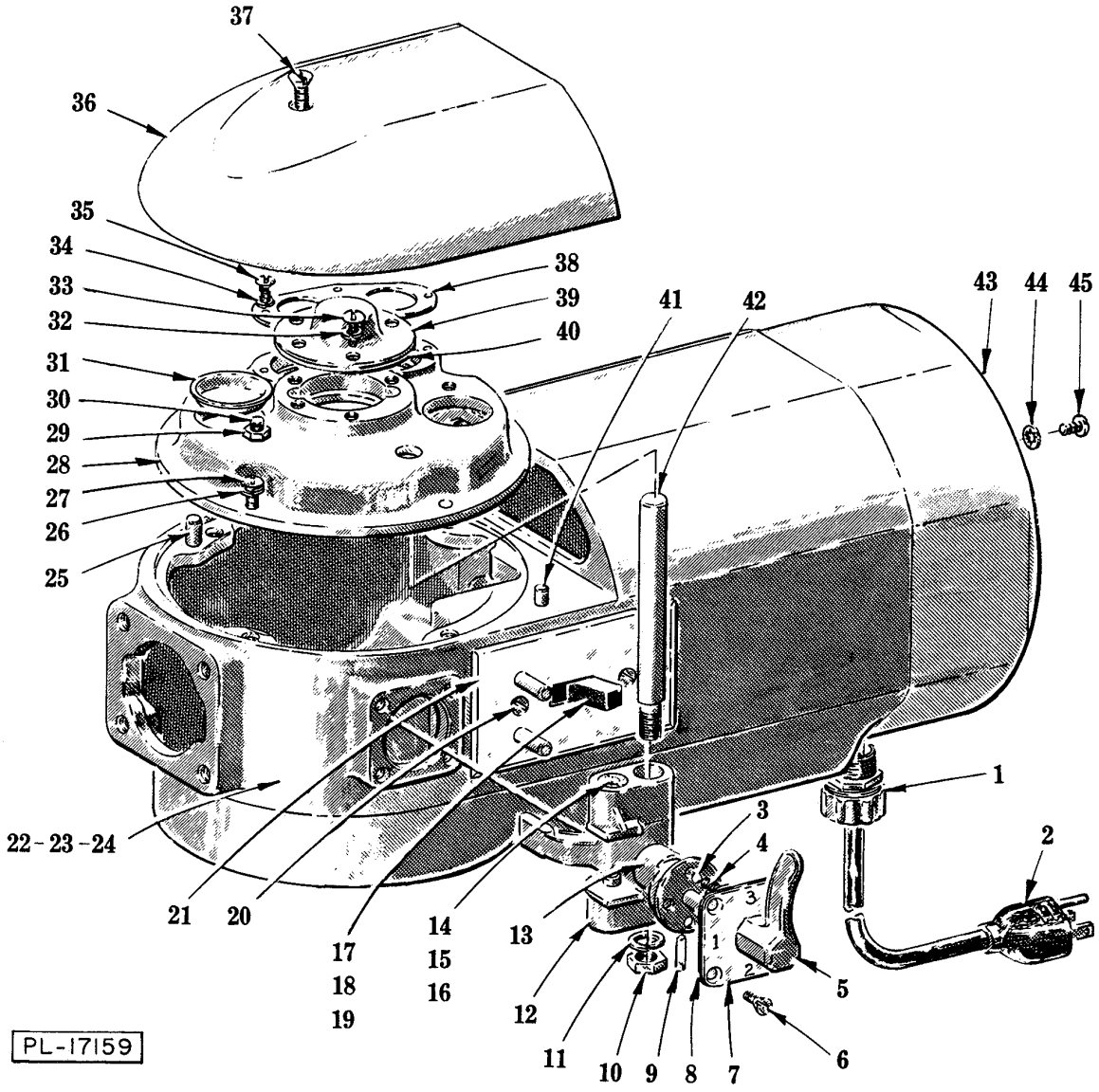

TRANSMISSION CASE AND SHIFTER UNIT

TRANSMISSION CASE AND SHIFTER UNIT

ILLUS. PL-17159	PART NO.	NAME OF PART	AMT.
1	FE-6-31	Connector - Strain Relief	1
2	B-117542-7	Cord & Plug Assy	1
3	BA-2-9	Ball - 1/4" Dia	2
4	V-111170	Spring - Detent	2
5	C-114505	Handle - Shifter	1
6	SC-200-10	Mach. Screw - M.5 x 1 x 12 mm Oval Hd	4
7	P-12726-1	Plate - Shifter Index	1
8	M-23946	Gasket - Shifter Index Plate	1
9	PS-3-8	Spriol Pin - 1/8" Dia. x 3/4" Lg	1
10	NS-13-22	Full Nut - 3/8"-16 Hex Fin	1
11	WL-4-2	Lock Washer - 3/8" Light	1
12	P-13160	Yoke - Shifter	1
13	B-114506	Cam - Gear Shifter	1
14	V-12733	Plunger - Shifter Yoke	2
15	V-12734	Spring - Shifter Yoke	2
16	V-12732	Retainer - Spring (Shifter Yoke)	2
17	P-87711-99-4	NLA - Obsolete--Switch (1 Ph.)	1
18	P-16504	Insulator - Switch	2
19	M-74835	Screw - Switch Mounting	2
20	SC-30-6	Mach. Screw - #6-32 x 3/8" Oval Hd	2
21	B-124564-2	Switch Plate Assy	1
22	E-118039	NLA - Obsolete--Case - Transmission	1
23	PL-3-14	Plug - 15/16" Dia. Expansion	1
24	PL-3-28	Plug - 1-5/16" Dia. Expansion	1
25	D-11800-116	Dowel	1
26	WL-200-1	NLA - Obsolete--Lock Washer - M.6	4
27	SC-200-04	Mach. Screw - M.6 x 1 x 16 mm Pan Hd (NLA)	4
28	P-67750	Transmission Shaft Support and Screw Assy. (Incls. item #29 & 30)	1
29	NS-200-1	NLA - Obsolete--Mach. Nut - M.6 Hex	1
30	SC-200-6	Mach. Screw - M.6 x 1 x 40 mm Pan Hd	1
31	M-64871	Plug - Friction	2
32	WL-200-1	NLA - Obsolete--Lock Washer - M.6	3
33	SC-200-12	Mach. Screw - M.6 x 1 x 12 mm Pan Hd	3
34	WL-3-22	Lock Washer - #10 Light	4
35	SC-200-3	NLA - Obsolete--Mach. Screw - M.5 x .8 x 10 mm Pan Hd	4
36	S-18231-1	Cover - Transmission Case	1
37	SC-200-14	NLA - Obsolete--Mach. Screw - M.6 x 1 x 30 mm Flat Hd	1
38	M-12708	Retainer - Twin Bearing	1
39	M-20394-1	Cap - Bearing Retainer	1
40	M-20395	Retainer - Bearing	1
41	D-11800-61	Dowel	2
42	M-12735	Rod - Shifter Guide	1
43	C-136065	Cover - Motor End	1
44	WL-8-13	Lock Washer - #10 Int. Shakeproof	3
45	SC-200-23	NLA - Obsolete--Mach. Screw - M.5 x 1 x 10 mm Mushroom Hd	3

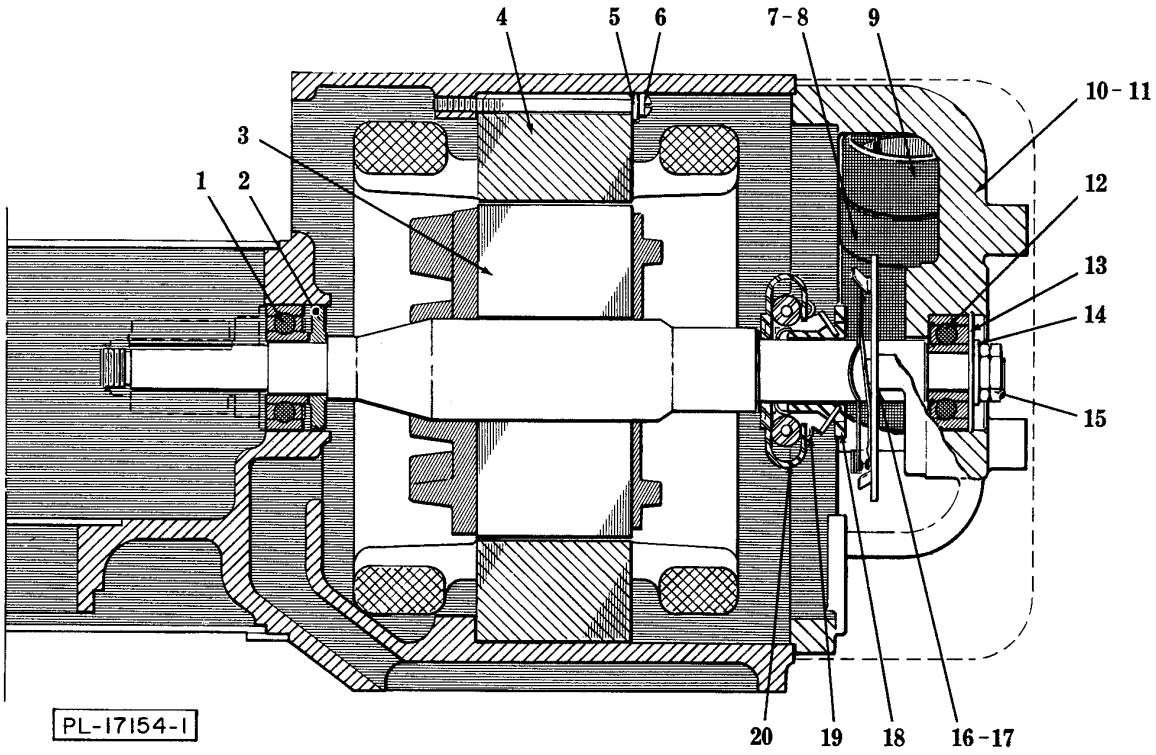

MOTOR UNIT F12656

MOTOR UNIT F12656

ILLUS. PL-17154-1	PART NO.	NAME OF PART	AMT.
1	BB-16-9	Ball Bearing - N.D. #C8503	1
2	M-13174-1	Deflector - Grease	1
3	C-145083-2	NLA - Obsolete--Rotor Assy. (60 Hz.) (Incls. items # 18, 19 & 20)	1
4	D-146000-1	NLA - Obsolete--Stator Assy. (60 Hz.)	1
5	B-12671	Retainer - Stator	4
6	B-136211-2	Bolt - Stator	4
7	B-137241	NLA - Obsolete--Clip - Capacitor	1
8	SC-200-20	NLA - Obsolete--Mach. Screw M5 x 0.8 x 6mm Slotted Cheese Hd	1
9	B-137181	Capacitor (60 Hz.)	1
10	C-137182	Bracket - Bearing	1
11	SC-200-22	Mach. Screw - M.6 x 1 x 20 mm Cheese Hd	4
12	BB-17-5	Ball Bearing - N.D. #7601	1
13	RR-11-17	Retaining Ring	1
14	WS-7-9	Washer - Special	1
15	V-11430	Nut - Special	2
16	P-66085	Switch Assy. (Stationary Part)	1
17	SC-200-21	Mach. Screw - M 3.5 x .6 x 8 mm Pan Hd	2
18	P-21607	NLA - Obsolete--Sleeve - Switch (Rotating Part)	1
19	P-23706-1	Spring - Switch (60 Hz.) (Rotating Part)	2
20	P-88428	Starting Switch Assy. (Rotating Part)	1

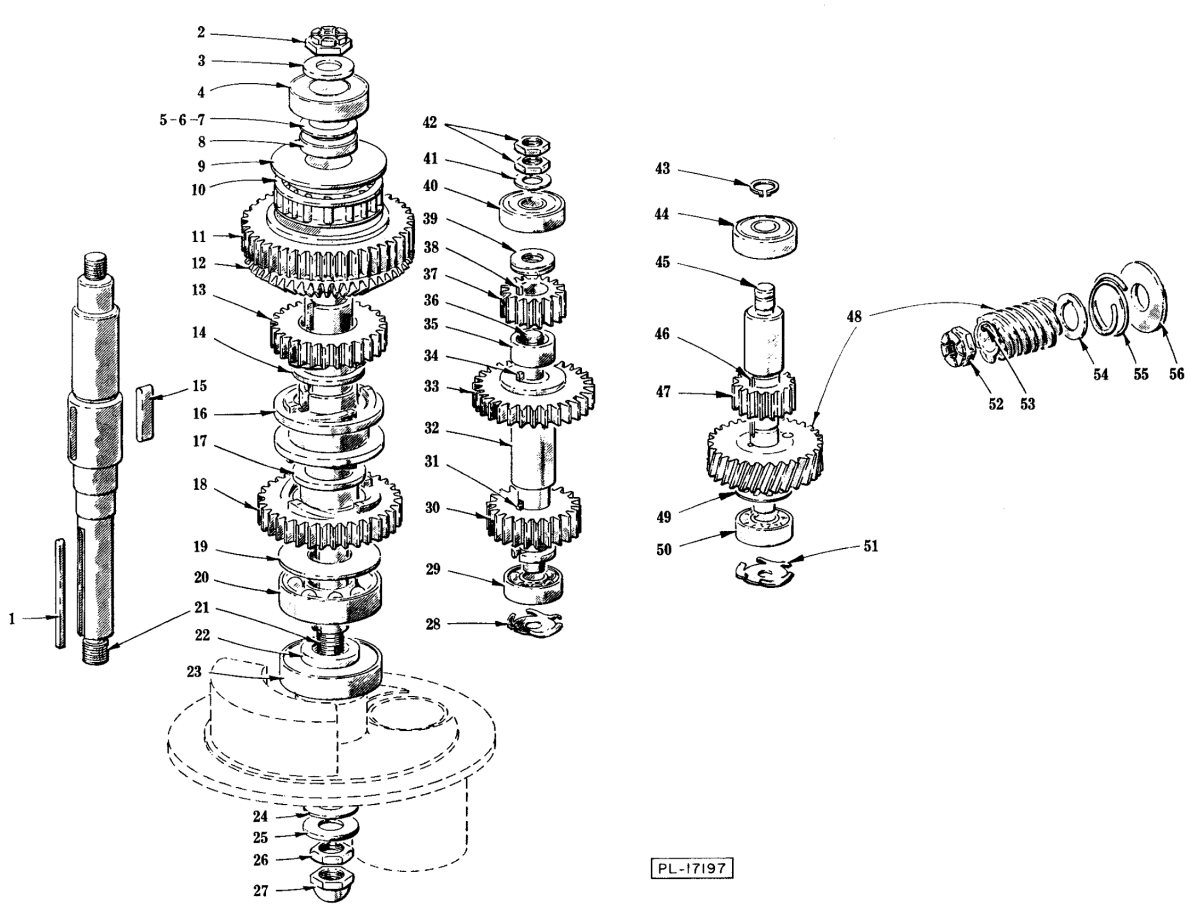

TRANSMISSION GEAR UNIT

TRANSMISSION GEAR UNIT

ILLUS. PL-17197	PART NO.	NAME OF PART	AMT.
1	R-12430-18	Key	2
2	NS-32-29	Stop Nut - 1/2"-20 "Flexloc"	1
3	WS-8-13	Washer - Retaining	1
4	BB-20-18	Ball Bearing - N.D. #77503	1
5	WS-10-18	Shim - Brg. (.002" Thk.)	AR
6	WS-10-19	Shim - Brg. (.003" Thk.)	AR
7	WS-10-20	Shim - Brg. (.010" Thk.)	AR
8	B-36306	Spacer - Upper	1
9	C-145151	NLA - Obsolete--Sleeve	1
10	B-145149-1	Clutch	1
11	C-145150	Gear - Slow Speed (46T)	1
12	C-145148	Gear - Bevel (46T)	1
13	C-12694	Gear -Clutch (29T)	1
14	M-12695	Bearing - Clutch Gear	1
15	D-12430-55	Key	1
16	C-70035-2	Sleeve - Clutch	2
17	M-12695	Bearing - Clutch Gear	1
18	C-12696	Gear -Clutch (38T)	1
19	M-12723	Spacer - Lower	1
20	BB-20-6	Ball Bearing -N.D. #7504	1
21	C-135173	Shaft - Center	1
22	M-14674	NLA - Obsolete--Spacer - Bearing	1
23	A-114695	Seal - Oil	1
24	WS-007-26	Washer (Fiber)	1
25	WS-24-1	Washer - Retaining (STL)	1
26	V-10928-2	Nut - 1/2"-20 Special	1
27	M-24715-3	Acorn Nut - 1/2"-20	1
28	SL-2-8	Spring - Preloading	1
29	BB-5-1	Ball Bearing -N.D. #3200	1
30	C-12699	Gear (23T)	1
31	C-109070-18	Key - Hardened	1
32	V-12697	Spacer - Lower	1
33	C-12700	Gear (32T)	1
34	C-109070-18	Key - Hardened	1
35	V-12698	Spacer - Central	1
36	M-12717	Shaft - Transmission	1
37	C-103960	Gear (15T)	1
38	C-109070-18	Key - Hardened	1
39	V-12744	Spacer - Upper	1
40	BB-5-2	Ball Bearing - N.D. #7500	1
41	WS-6-36	Washer - Retaining	1
42	V-12710	Nut - Retaining	2
43	RR-10-10	Retaining Ring	1
44	BB-5-2	Ball Bearing - N.D. #7500	1
45	C-118239	Shaft - Worm Gear	1
46	R-12430-4	Key	1
47	C-103960	Gear (15T)	1
48	A-123841	Worm & Worm Wheel (Incls. items #53 thru 56)	1
49	RR-10-16	Retaining Ring	1
50	BB-5-1	Ball Bearing -N.D. #3200	1
51	SL-2-8	Spring - Preloading	1
52	NS-32-23	Stop Nut - 7/16"-20 "Flexloc	1
53	V-12747	Key	1
54	V-12754	Washer	1
55	V-12757	Spring - Shock Absorber	1
56	V-12711	Washer - Shock Absorber Spring	1

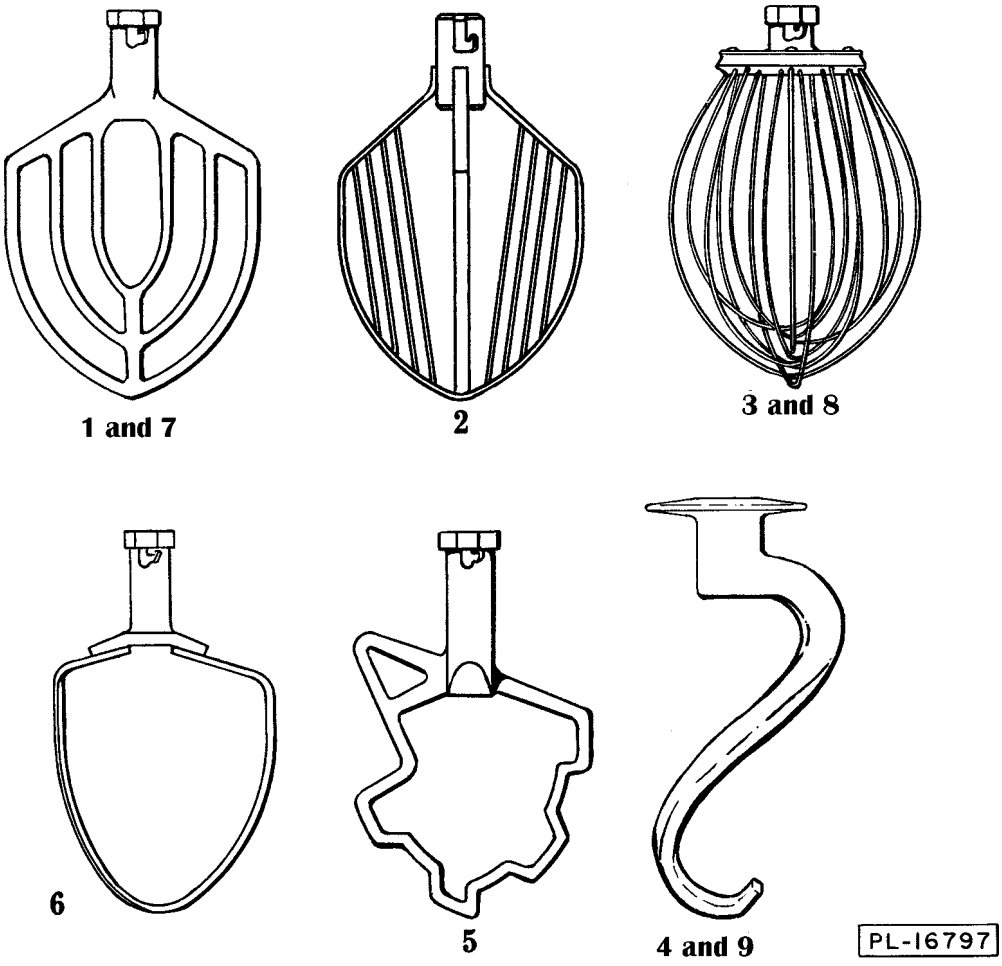

AGITATORS

AGITATORS

ILLUS. PL-16797	PART NO.	NAME OF PART	AMT.
	20 QT.		AR
1	R-23126	"B" Flat Beater	1
2	D-123753	"C" Wing Whip	1
3	R-23511-1	"D " Wire Whip	1
4	E-119984	"ED" Dough Arm	1
5	R-8022	"S" Sweet Dough Beater	1
6	R-74286	"P" Pastry Knife	1
	12 QT.		AR
7	R-23502	"B" Flat Beater	1
8	R-23523-1	"D " Wire Whip	1
9	S-62886	"ED" Dough Arm	1