INSTRUCTION MANUAL
with Catalog of Replacement Parts

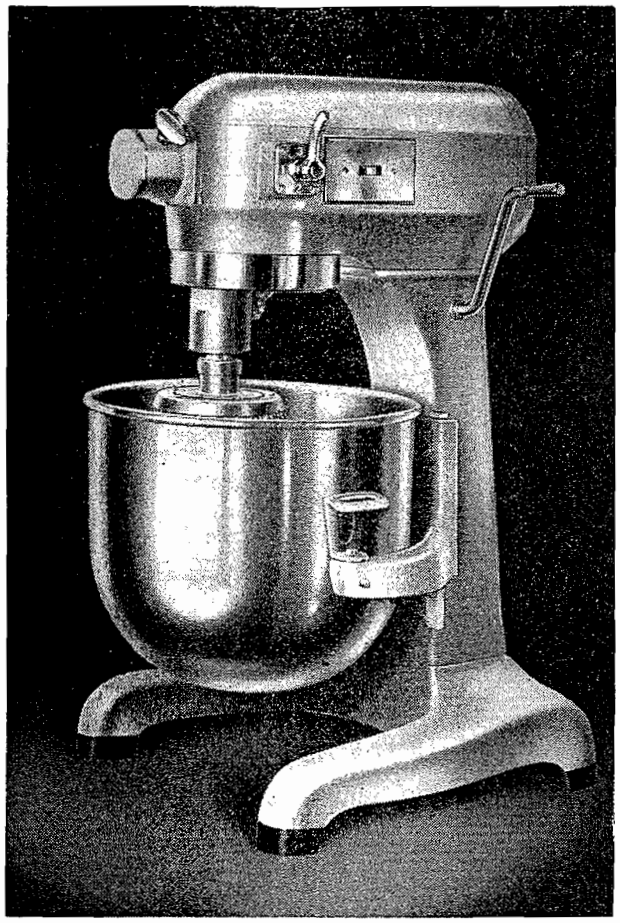

MODEL A-200 MIXER

Specification 3943

THE HOBART MANUFACTURING CO.
TROY, OHIO, U. S. A.

FORM 5577-C

Instructions for Operation and Care of Model A-200 Hobart Mixer

CONNECTIONS

All machines except those for three phase current are furnished with a flexible cord and attachment plug. Before plugging into a socket the first time make sure that the current and voltage of the motor agree with those of your line. The electrical specifications of the motor are stamped upon the name plate attached to the left side of the case. The outlet 4 is taped for ½" conduit, which may be substituted for the flexible cord if a more permanent installation is required. The planetary must revolve in the direction of the arrow in the illustration.

LUBRICATION

The transmission gearing is packed with a special grease that will last for several years. When grease is needed for replacement it should be ordered from us. A small oiler at 5 is for lubricating attachments. Oil only when an attachment is in place and never use more than a drop or two. Lubricate the bowl slideways 6 occasionally by applying a very small amount of oil or grease with the tip of your finger. Only mineral oils are suitable for this type of lubrication. The polished drip cup 7 is a safe-guard to prevent lubricant that might work out of the planetary gearing from dropping into the bowl. Take it off once a month and wipe it clean. To remove the drip cup, pull it straight down.

SPEED CONTROL

To change speeds, first turn off the motor, then shift the speed handle to the desired speed. In the illustration the handle is set for number 3 or high speed. This speed is recommended for fast, light work such as whipping cream, beating eggs, and mixing thin batters. Number 1 or slow speed is for heavy mixtures, like breakfast rolls. It is also the proper speed for the meat choper. In many mixing operations it is customary to start on number 1 and then change to a higher speed as the work progresses.

BOWL LIFT

Pull the lever 8 forward to lower the bowl. It is necessary to lower the bowl in order to change beaters, and it makes the bowl more accessible for filling. When raising the bowl move the lever a little beyond the vertical center, until you feel it touch the stop. To mash potatoes, or to cream butter, start with the bowl down and raise it slowly into working position.

BEATERS

The beaters illustrated in the illustration are as follows:

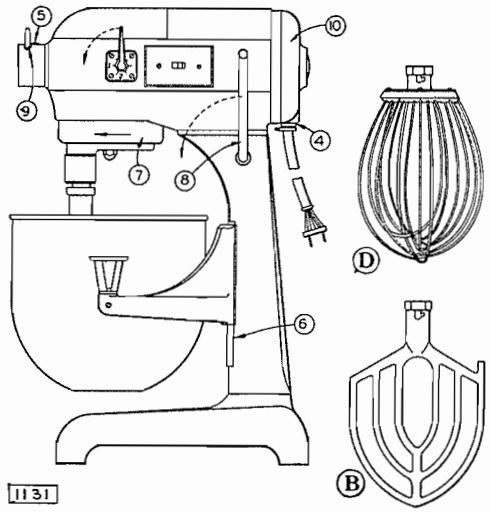

Style "B" is commonly used for thin batters, cakes, and for mashing potatoes.

Style "D" is best for whipping cream, and beating eggs.

Two other styles frequently used are "E" for heavy bread doughs, and "PK" for cutting shortening into flour for pastry.

ATTACHMENTS

Any of our No. 12 size attachments will fit this mixer, the most popular being the vegetable slicer and shredder, the meat chopper, the fruit juice extractor, the salad oil tank, and the colander. Before putting an attachment into the socket stop the motor, then insert with a slight twist toward the left so that the stop stud in the attachment is tight against the side of the hole that receives it. When in place tighten thumb screw 9 and put a drop of oil in cup 5.

The attachment drive has three speeds, governed by the speed handle of the mixer. For most attachments set the handle at number 1. The tool grinder may run at number 3 speed. THE CHOPPER ATTACHMENT MUST NEVER RUN FASTER THAN SPEED 1 when cutting meat, but when cutting vegetables it may run at number 2 speed. Use the motor switch to start and stop attachments, and always stop the motor before changing the speed of an attachment.

CARE OF MOTOR

Motors for certain electrical specifications have removable cover plates at 10. If your machine has such a motor, have a service man take the covers off once a year and inspect the commutator, at which time brushes may be replaced if necessary and the commutator may be cleaned.

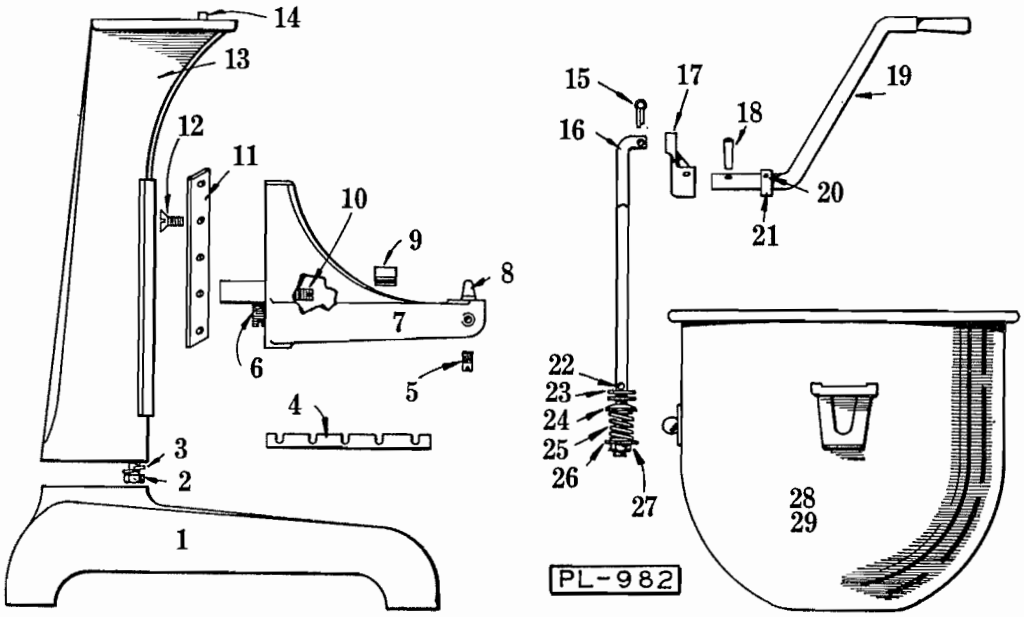

BASE, PEDESTAL & BOWL UNIT

ILLUS. PL-982	PART NUMBER	NAME OF PART	AMOUNT
1	T-12677	Base	1
2	SC-36-60	Cap Screw - 3/8"-16 x 1-3/4" Hex Hd.	4
3	WL-4-2	Lock Washer - 3/8" x .136" x .070"	4
4	V-16389	Shim - Bowl Support	As reqd.
5	V-5014	Stud - Ice Jacket Hook	2
6	SC-51-25	Set Screw - 7/16"-14 x 7/8" Hdless Oval Pt.	1
7	M-24869	Bowl Support Sub-Assy. Unit (Incl. Items #8, 9, & 10)	1
8	V-6938	Pin - Bowl Locating	2
9	V-13297	Bushing - Bowl Retaining Pin	1
10	SC-51-20	Set Screw - 5/16"-18 x 1-1/8" Hdless Cup Pt.	1
11	M-15218	Gib - Bowl Support	2
12	SC-13-49	Machine Screw - #10-24 x 5/8" Flat Hd.	10
13	T-15235	Pedestal	1
14	P-11800-116	Dowel	2
15	PC-3-55	Cotter Pin - 1/8" x 3/4" Lg.	1
16	P-15215	Rod - Bowl Lift	1
17	M-12685	Arm - Bowl Lift	1
18	PT-3-50	Taper Pin - #3 x 1" Lg.	1
19	P-60422	Lift Handle Sub-Assy. (Incl. items #20 & 21)	1
20	P-11800-181	Dowel	1
21	V-12716	Stop Collar - Lift Handle	1
22	PC-3-55	Cotter Pin - 1/8" x 3/4" Lg.	1
23	WS-6-33	Washer	As reqd.
24	V-12745	Washer - Special	1
25	V-12782	Spring	1
26	WS-6-26	Washer	1
27	NS-13-26	Nut - 3/8"-24 Hex	1
28	S-62103	Bowl Assy. - 20 Qt.	1
29	S-15360	Bowl Assy. - 12 Qt.	1
	WS-9-11	Washer - Lift Handle (St.)	As reqd.
	WS-9-13	Washer - Lift Handle (Fiber)	As reqd.

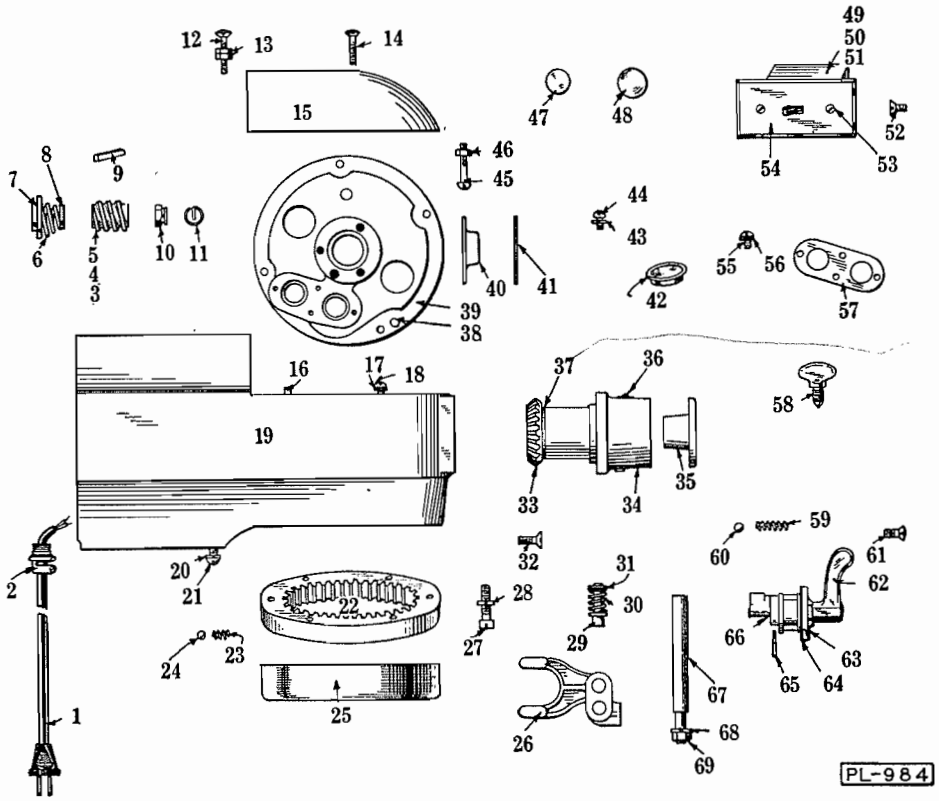

TRANSMISSION CASE UNIT

ILLUS. PL-984	PART NUMBER	NAME OF PART	AMOUNT
1	S-23552-3	Cord & Plug - (2 Conductor)	1
2	FE-2-20	Connector - Squeeze	1
3	M-12743	Worm - 5T (30-60 Cycle)	1
4	M-12770	Worm - 5T (25-50 Cycle)	1
5	M-12784	Worm - 7T (40 Cycle)	1
6	V-12757	Spring - Shock Absorber	1
7	V-12711	Washer - Shock Absorber Spring	1
8	V-12754	Washer	1
9	V-12747	Key	1
10	M-12792	Nut - Special	1
11	V-12793	Ring - Retaining	1
12	SC-15-55	Machine Screw - #12-24 x 1-1/2" Oval Ctsk. Hd.	1
13	NS-9-36	Hex Nut - #12-24	2
14	SC-15-54	Machine Screw - #12-24 x 1-1/4" Oval Ctsk. Hd.	1
15	S-18231-1	Cover - Transmission Case	1
16	P-11800-61	Dowel	2
17	WL-3-28	Lock Washer - #12 x .062" x .047"	4
18	SC-8-51	Machine Screw - #12-24 x 3/4" Rd. Hd.	4
19	T-12678	Case - Transmission	1
20	WL-3-43	Lock Washer - 5/16" x .117" x .056"	4
21	SC-8-92	Machine Screw - 5/16"-18 x 1" Rd. Hd.	4
22	M-24893	Int. Gear Sub-Assy. Unit (63T) (Incl. items #23 & 24)	1
23	V-7094	Spring	2
24	BA-2-9	Ball - 1/4" Dia.	2
25	P-15214	Cup - Drip	1
26	P-13160	Yoke - Shifter	1
27	SC-38-6	Cap Screw - 1/4"-20 x 1-1/8" Fil. Hd.	6
28	WL-3-35	Lock Washer - 1/4" x .047" x .078"	6
29	V-12733	Plunger - Shifter Yoke	2
30	V-12734	Spring	2
31	V-12732	Retainer - Spring (Shifter Yoke)	2
32	SC-13-71	Machine Screw - #12-24 x 3/4" Flat Hd.	4
33	M-24889	Zerol Bevel Drive Gear & Plug Sub-Assy. Unit	1
34	R-12686	Hub - Attachment	1
35	P-22869	Cover - Attachment Hub Blind End	1
36	OG-3-30	Oiler - Gits	1
37	M-12746	Washer - Thrust (Give Thk.)	As reqd.
38	P-11800-116	Dowel	1
39	S-12687	Support - Transmission Shaft	1
40	M-20394	Cap - Bearing Retainer	1
41	M-20395	Retainer - Bearing	1
42	M-20205	Plug - 1-5/16" Dia. Friction	2
43	WL-3-28	Lock Washer - #12 x .062" x .047"	3
44	SC-8-48	Machine Screw - #12-24 x 1/2" Rd. Hd.	3
45	SC-8-56	Machine Screw - #12-24 x 1-1/2" Rd. Hd.	1
46	NS-9-36	Hex Nut - #12-24	1
47	PL-3-14	Plug - 15/16" Dia. Expansion	1
48	PL-3-28	Plug - 1-5/16" Dia. Expansion	1
49	R-24940-4	Switch - Single Phase & D. C.	1
50	R-24940-2	Switch - Three Phase	1
51	P-16504	Insulator - Switch	1
52	SC-13-11	Machine Screw - #6-32 x 1/4" Flat Hd.	2
53	SC-30-6	Machine Screw - #6-32 x 3/8" Oval Ctsk. Hd.	2
54	M-21944	Plate - Switch	1
55	SC-7-74	Machine Screw - #10-24 x 3/8" Rd. Hd.	4
56	WL-3-22	Lock Washer - #10 x .055" x .040"	4
57	M-12708	Retainer - Twin Bearing	1
58	M-4202-2	Thumb Screw	1
59	V-10755	Spring - Detent	2
60	BA-2-9	Ball - 1/4" Dia.	2
61	SC-30-24	Machine Screw - #10-24 x 1/2" Oval Ctsk. Hd.	4
62	P-12728	Handle - Shifter	1
63	P-12726	Plate - Shifter Index	1
64	M-23946	Gasket - Shifter Index Plate	1
65	PT-3-28	Taper Pin - #1 x 3/4"	1
66	M-12729	Cam - Gear Shifter	1
67	M-12735	Guide Rod - Shifter	1
68	WL-4-2	Lock Washer - 3/8" x .136" x .070"	1
69	NS-13-22	Hex Nut - 3/8"-16	1

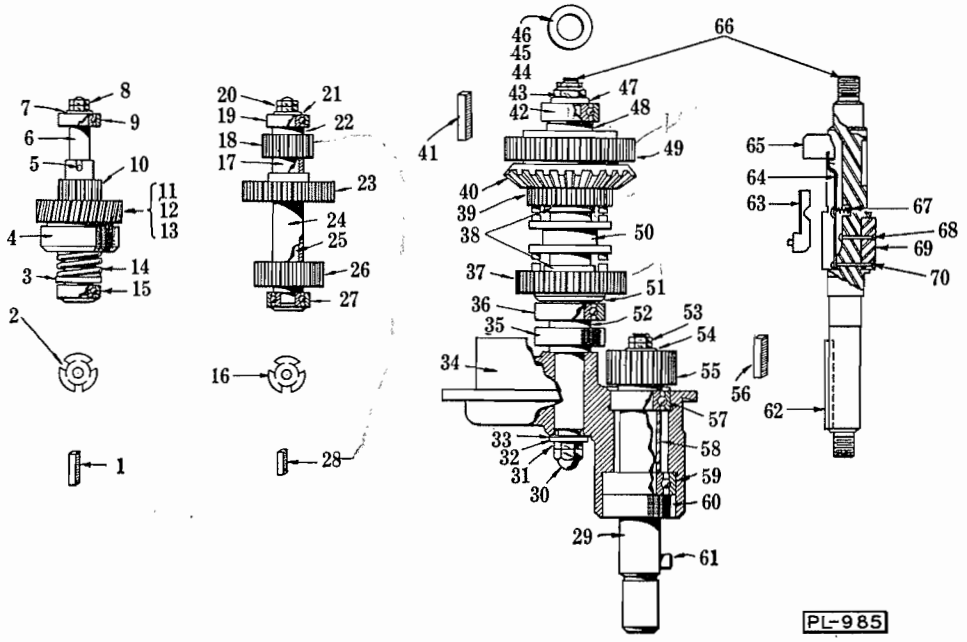

TRANSMISSION GEAR UNIT

ILLUS. PL-985	PART NUMBER	NAME OF PART	AMOUNT
1	R-12430-1	Key	1
2	SL-2-8	Spring - Preloading	1
3	WS-9-28	Washer	1
4	M-12721	Lower Member - Release	1
5	V-18431	Pin	1
6	M-12725	Shaft - Worm Gear	1
7	WS-6-8	Washer - Retaining	1
8	V-12710	Nut - Retaining	2
9	BB-5-2	Ball Bearng - ND #7500 X1C-PI	1
10	V-12719	Gear - 15T	1
11	M-12740	Worm Wheel & Hub Assy. 29T (30-60 Cyc.)	1
12	M-12769	Worm Wheel & Hub Assy. 24T (25-50 Cyc.)	1
13	M-12785	Worm Wheel & Hub Assy. 26T (40 Cyc.)	1
14	M-12724	Spring - Friction Drive	1
15	BB-5-1	Ball Bearing - N.D. #3200 X1A-PI	1
16	SL-2-8	Spring - Preloading	1
17	V-12698	Spacer - Central	1
18	M-15224	Gear - 15T	1
19	BB-5-2	Ball Bearing - N.D. #7500 X1C-PI	1
20	V-12710	Nut - Retaining	2
21	WS-6-8	Washer - Retaining	1
22	V-12744	Spacer - Upper	1
23	M-12700	Gear - 32T	1
24	V-12697	Spacer - Lower	1
25	M-12717	Shaft - Transmission	1
26	V-12699	Gear - 23T	1
27	BB-5-1	Ball Bearing - N.D. #3200 X1A-PI	1
28	R-12430-2	Key	3
29	P-15213	Shaft - Beater	1
30	M-24715	Acorn Nut - 1/2"-20	1
31	V-10928-2	Nut - Special 1/2"-20	1
32	WS-8-13	Washer - Retaining	1
33	WS-7-26	Washer - Fiber	1
34	S-23166	Planetary	1
35	M-23483	Seal - Oil	1
36	BB-5-41	Ball Bearing - N.D. #7504 X1C-PI	1
37	M-12696	Gear - 38T Clutch	1

ILLUS. PL-985	PART NUMBER	NAME OF PART	AMOUNT
38	M-12695	Bearing - Clutch Gear	2
39	M-12694	Gear - 29T Clutch	1
40	P-18800	Gear - 46T Bevel Zerol	1
41	R-12430-59	Key	1
42	BB-5-27	Ball Bearing - N.D. #77503 X1C-PI	1
43	NS-32-29	Lock Nut - 1/2"-20 Flexloc	1
44	WS-10-18	Shim - Brg. (.002" thk)	As reqd.
45	WS-10-19	Shim - Brg. (.003" thk)	As reqd.
46	WS-10-20	Shim - Brg. (.010" thk)	As reqd.
47	WS-8-13	Washer - Retaining	1
48	M-12701	Spacer - Upper	1
49	M-15225	Gear - 46T Slow Speed	1
50	M-12703	Sleeve - Clutch	1
51	M-12723	Spacer - Lower	1
52	M-14674	Spacer - Bearing	1
53	V-11430	Nut - Special	2
54	WS-7-9	Washer - Special	1
55	M-15217	Pinion - 19T Beater	1
56	R-12430-56	Key	1
57	BB-5-26	Ball Bearing - N.D. #7503 X1C-PI	1
58	V-15219	Spacer - Bearing	1
59	BB-5-41	Ball Bearing - N.D. #7504 X1C-PI	1
60	M-23482	Seal Oil	1
61	P-11800-115	Dowel	1
62	R-12430-18	Key	1
63	M-13024	Block - Diving Key Control	1
64	V-12749	Arm - Diving Key Control	1
65	M-15528	Key - Diving	1
66	R-12750	Shaft, Center	1
67	V-12759	Spring	1
68	V-15575-1	Rivet	1
69	V-16577	Key - Special Feather	1
70	V-15575-2	Rivet	1
	P-24551	Center Shaft Assy. Unit (Incl. items #64, 66, 67, 68, 69, 70)	1
	M-24883	Beater Shaft Sub-Assy. Unit (Incl. items #29, 61)	1
	M-24861	Worm Gear Shaft Sub-Assy. Unit (Incl. items #1, 3, 4, 5, 6, 10, 11, 14) (Give Elec. Spec.)	1

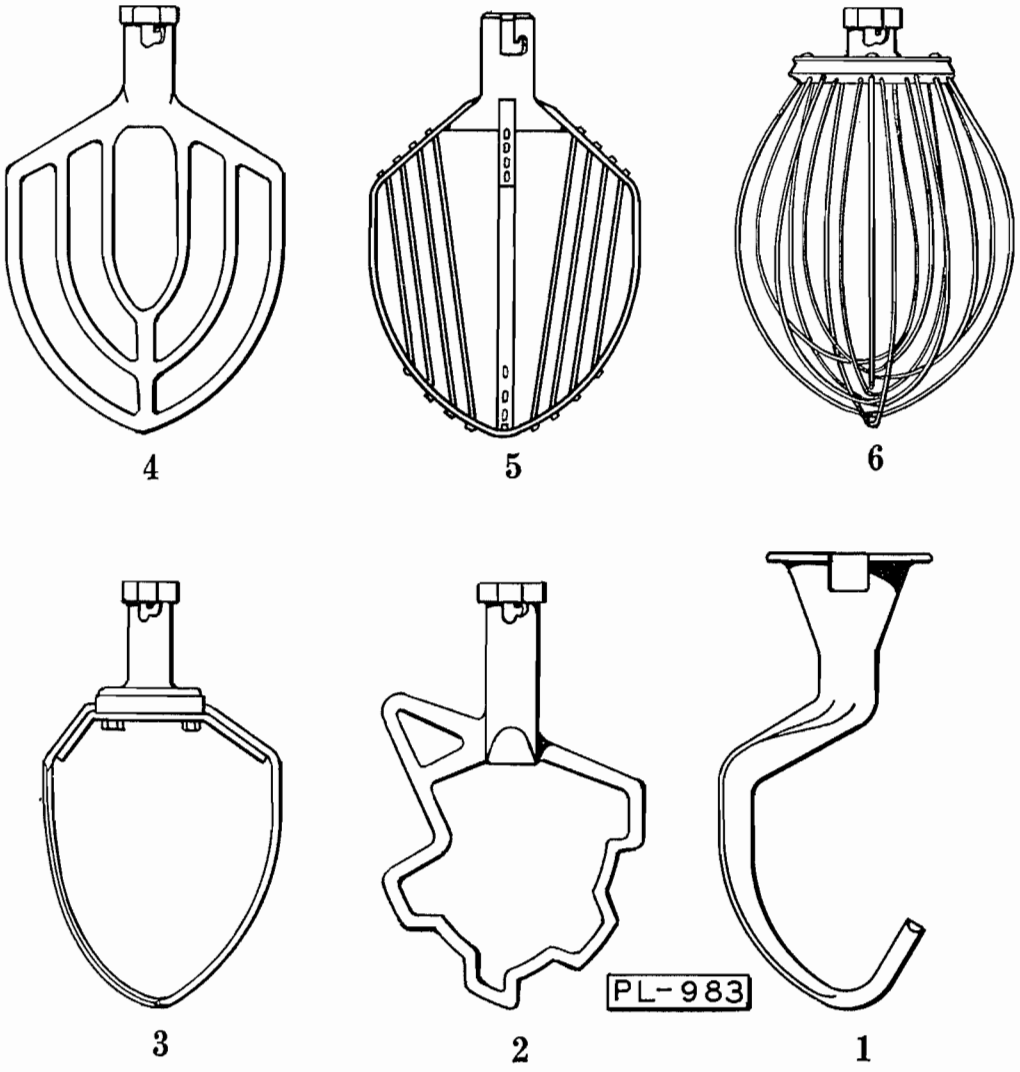

BEATERS

ILLUS. NO.	PART NUMBER	PART NUMBER	NAME OF PART	AMOUNT
PL-983	20 QT.	12 QT.		
1	S-23467	--------	"E" Dough Arm	1
2	R-8022	--------	"S" Sweet Dough Beater	1
3	P-8033	--------	"P" Pastry Knife	1
4	R-23126	R-23502	"B" Flat Beater	1
5	R-22755	--------	"C" Wing Whip	1
6	R-23511	R-23523	"D" Wire Whip	1

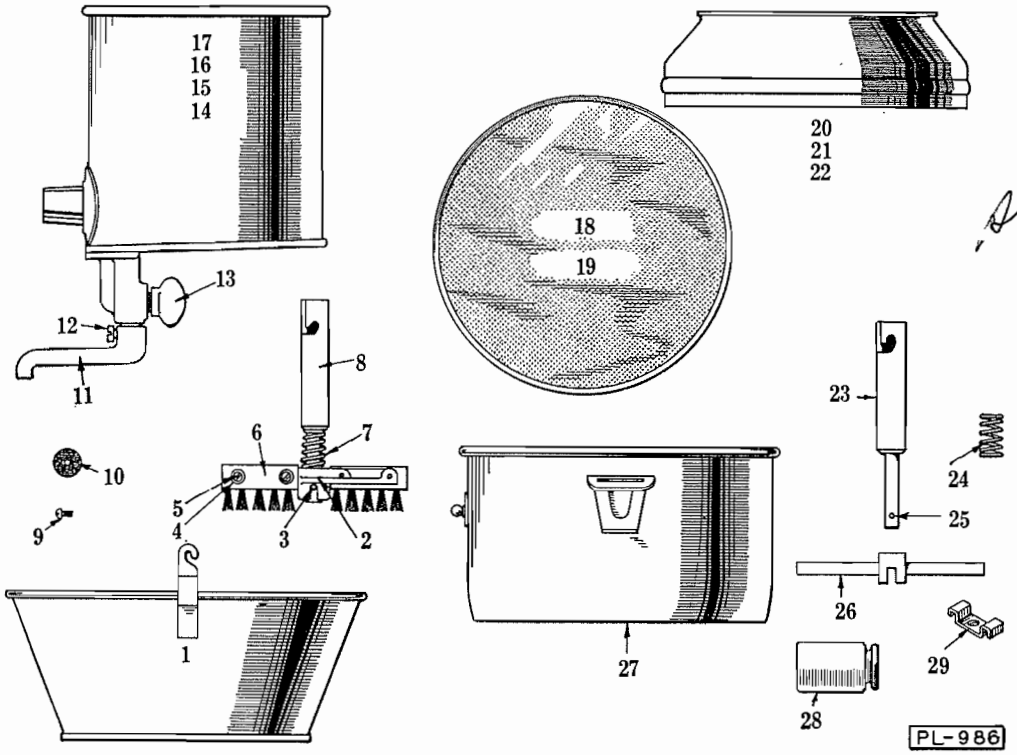

See Form 5906

COLANDER, SOUP STRAINER, AND OIL DROPPER UNIT

ILLUS. PL-986	PART NUMBER	NAME OF PART	AMOUNT
1	R-15365	Ice Jacket Assembly	1
2	P-15372	Holder - Brush	1
3	P-11800-178	Dowel	1
4	WS-3-1	Washer	4
5	SC-9-32	Machine Screw - 1/4"-20 x 1-3/8" Rd. Hd.	4
6	M-12907	Brush	2
7	M-7954	Spring	1
8	P-15369	Shank	1
9	SC-7-42	Machine Screw - #8-32 x 1/2" Rd. Hd. (Oil Dropper)	1
10	V-5740	Washer - Valve (Oil Dropper)	1
11	M-12857	Spout	1
12	V-15209	Screw - Spout Locking	1
13	M-12859	Stem - Valve	1
14	P-60681-1	Can Assembly - (1 gal.)	1
15	P-60681-2	Can Assembly - (2 gal.)	1
16	P-60709-1	Can Assembly - (12 Qt. Attachment) (1 gal.)	1
17	P-60709-2	Can Assembly - (12 Qt. Attachment) (2 gal.)	1
18	P-12896	Disc - Colander (.027" Dia. Holes)	1
19	P-12901	Disc - Colander (3/32" Dia. Holes)	1
20	S-20388	Extension - Bowl (20 Qt.)	1
21	R-12881	Extension - Bowl (12 Qt. Attachment)	1
22	S-20531	Splash Ring (Same as #20, except has Spout)	1
23	P-15369	Shank	1
24	M-7954	Spring	1
25	P-11800-178	Dowel	1
26	M-15370	Holder - Roller	1
27	R-15366	Bowl - Colander	1
28	M-15371	Roller	2
29	V-12900	Clip	1
	P-12861	Oil Dropper Assy. (1 gal.) (Incl. items #9, 10, 11, 12, 13 & 14)	1
	P-13234	Oil Dropper Assy. (2 gal.) (Incl. items #9, 10, 11, 12, 13 & 15)	1
	P-15377-1	Oil Dropper Assy. (1 gal.) 12 Qt. Attachment (Incl. items #9, 10, 11, 12, 13 & 16)	1
	P-15377-2	Oil Dropper Assy. (2 gal.) 12 Qt. Attachment (Incl. items #9, 10, 11 12, 13 & 17)	1
	P-15374	Soup Strainer Brush Assy. (Incl. items #2, 3, 4, 5, 6, 7 & 8)	1
	P-15373	Soup Strainer Roller Assy. (Incl. items #23, 24, 25, 26, 28 & 29)	1