HOBART

CATALOG OF REPLACEMENT PARTS

FRYERS

AK50	116201G001 - G006
AK55	116204G001 - G006
DK50	116202G001 - G006
DK55	116205G001 - G006
CK50	116200G001 - G016 & G025 - G027
CK55	116203G001 - G016

A product of HOBART CORPORATION TROY, OHIO 45374

FORM 14506 (1-83)

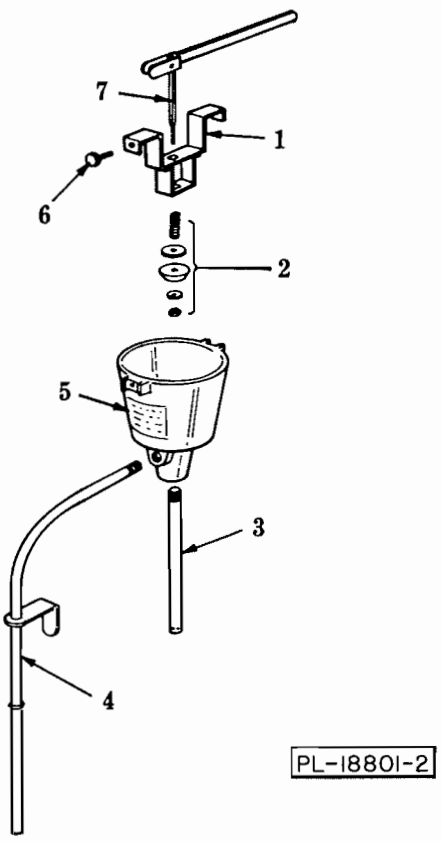

SIPHON UNIT

ILLUS. PL-18801-2	PART NO.	NAME OF PART	AMT.
1	344294-7	Guide Plate Assy	1
2	347116-1	Washer/Spring/Disc Kit	1
3	341530-1	Bowl Pipe	1
4	345857-2	Drain Pipe & Bracket	1
5	336534-1	Bowl	1
6	336529-1	Thumb Screw	1
7	344295-1	Lever	1
	336540-1	Bag - Siphon (Set of 6)	AR

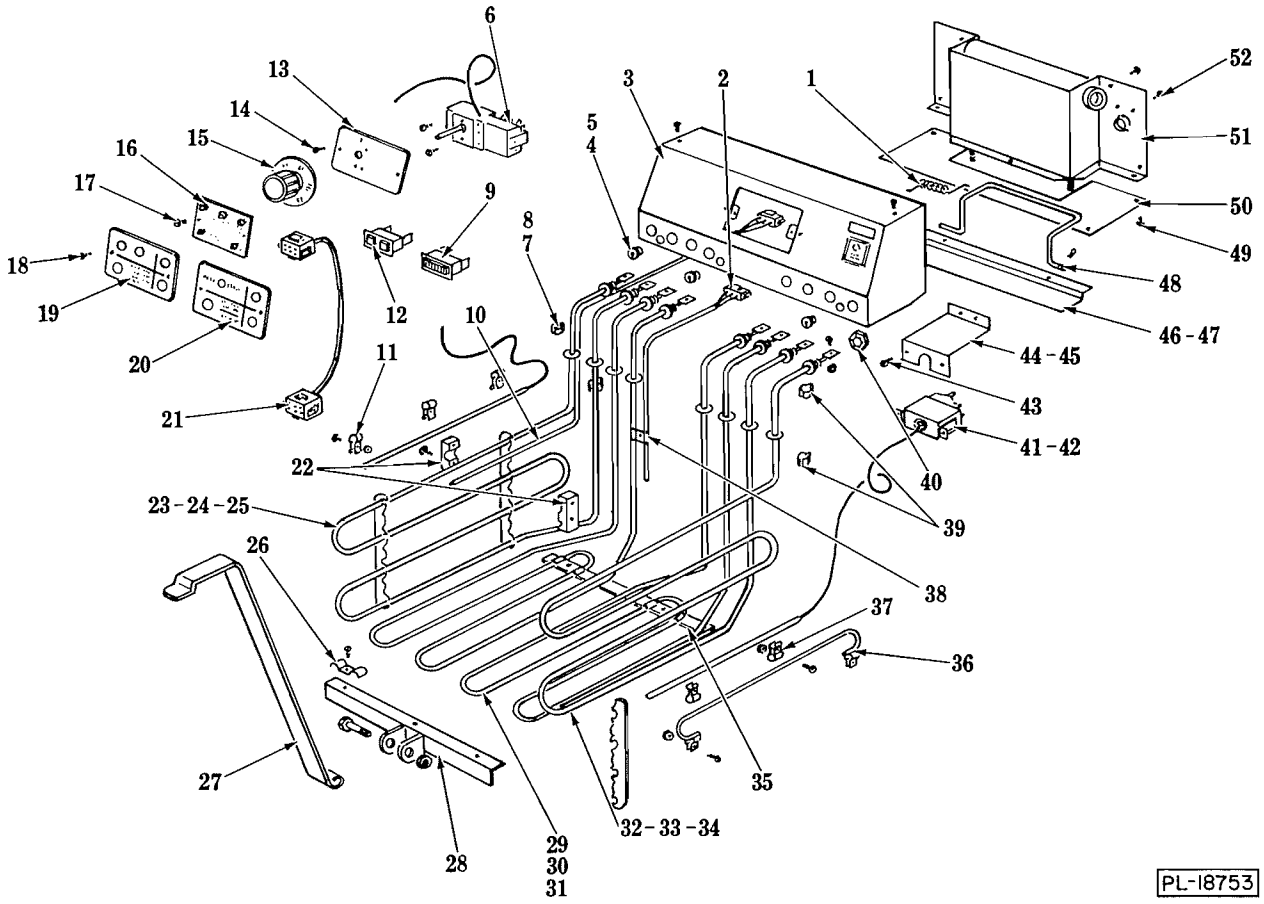
1
2
3
4
5
6
7
8
9
10
11
12
13
14
15
16
17
18
19
20
21
22
23-24-25
26
27
28
29
30
31
32-33-34
35
36
37
38
39
40
41-42
43
44-45
46-47
48
49
50
51
52
PL-18753

HEATERS

HEATERS

ILLUS. PL-18753	PART NO.	NAME OF PART	AMT.
1	342441-1	Spring - Support Bar	1
*2	347473-1	Probe/Plug - Computer	1
3	346143-1	Support - Heating Units	1
4	345689-2	Grommet - Capillary Tube	AR
*,***5	345689-1	Grommet - Probe	2
**6	349138-1	Control Thermostat	1
7	336410-1	Clip - Capillary Tube	AR
*,***8	345951-1	Clip - Temperature	2
*,***9	345751-1	Signal Light - Red (115 V.)	1
*,***10	347473-2	Probe/Plug - Temperature	1
11	347291-1	Bulb Clamp - Control Thermo	AR
**12	345751-2	Signal Light (Red/Yellow, 115 V.)	1
**13	352411-1	Cover - Control Thermostat Mounting	1
14	SC-114-83	Mach. Screw - #6-32 x 1/4" Pan Hd	AR
**15	344065-2	Dial Knob - Control Thermostat	1
*,***16	347006-1	Display Module - Lights	1
17	SC-114-83	Mach. Screw - #6-32 x 1/4" Pan Hd	AR
18	SC-114-83	Mach. Screw - #6-32 x 1/4" Pan Hd	AR
*19	345948-2	Lens - Display Module	1
**20	345948-3	Lens - Display Module	1
*,***21	345955-2	Cable - Light Display Module	1
*,***22	347163-1	Clamp - Temperature Probe Mounting	1
23	351375-2	Heating Unit - L.H. (208 V.)	1
24	351375-4	Heating Unit - L.H. (240 V.)	1
25	351375-6	Heating Unit - L.H. (480 V.)	1
26	341345-1	Clamp - Heating Unit Mounting	6
27	347146-1	Handle/Clamp - Heating Unit	1
28	341385-1	Bracket - Handle Mounting (Front)	1
29	347192-1	Heating Unit - Bottom (208 V.)	2
30	347192-2	Heating Unit - Bottom (240 V.)	2
31	351350-3	Heating Unit - Bottom (480 V.)	2
32	351375-1	Heating Unit - R.H. (208 V.)	1
33	351375-3	Heating Unit - R.H. (240 V.)	1
34	351375-5	Heating Unit - R.H. (480 V.)	1
35	341339-2	Bracket - Spacer Clamp (Rear)	1
36	351430-89	Bulb Guard - Safety Thermostat	1
37	347156-1	Bulb Clamp - Safety Thermostat Bulb Mounting	4
*38	347306-1	Clamp - Computer Probe Mounting	2
39	336410-1	Clip - Capillary Tube	AR
40	NS-35-2	Palnut - 5/8"-18	AR
**41	344523-6	Safety Thermostat - Manual Reset	1
*,***42	344523-5	Safety Thermostat - Automatic Reset	1
43	SD-34-49	Self-Tapping Screw - #8-32 x 1/2" Slot Hex Washer Hd., Type T	2
44	346586-1	Bracket - Safety Thermostat Mounting	1
45	SD-34-62	Self-Tapping Screw - #10-32 x 1/2" Slot Hex Washer Hd., Type T	2
46	SD-34-49	Self-Tapping Screw - #8-32 x 1/2" Slot Hex Washer Hd., Type T	2
47	341349-1	Guard - Grease Unit	1
48	347212-1	Support/Spring/Pin	1
49	SD-34-62	Self-Tapping Screw - #10-32 x 1/2" Slot Hex Washer Hd., Type T	4
50	341338-1	Bottom - Unit Support	1
51	346210-1	Pivot Block & Back	1
52	SD-34-62	Self-Tapping Screw - #10-32 x 1/2" Slot Hex Washer Hd., Type T	7

*AK Series.
**DK Series.
***CK Series.
NOTE: Some quantities will vary on different model fryers.

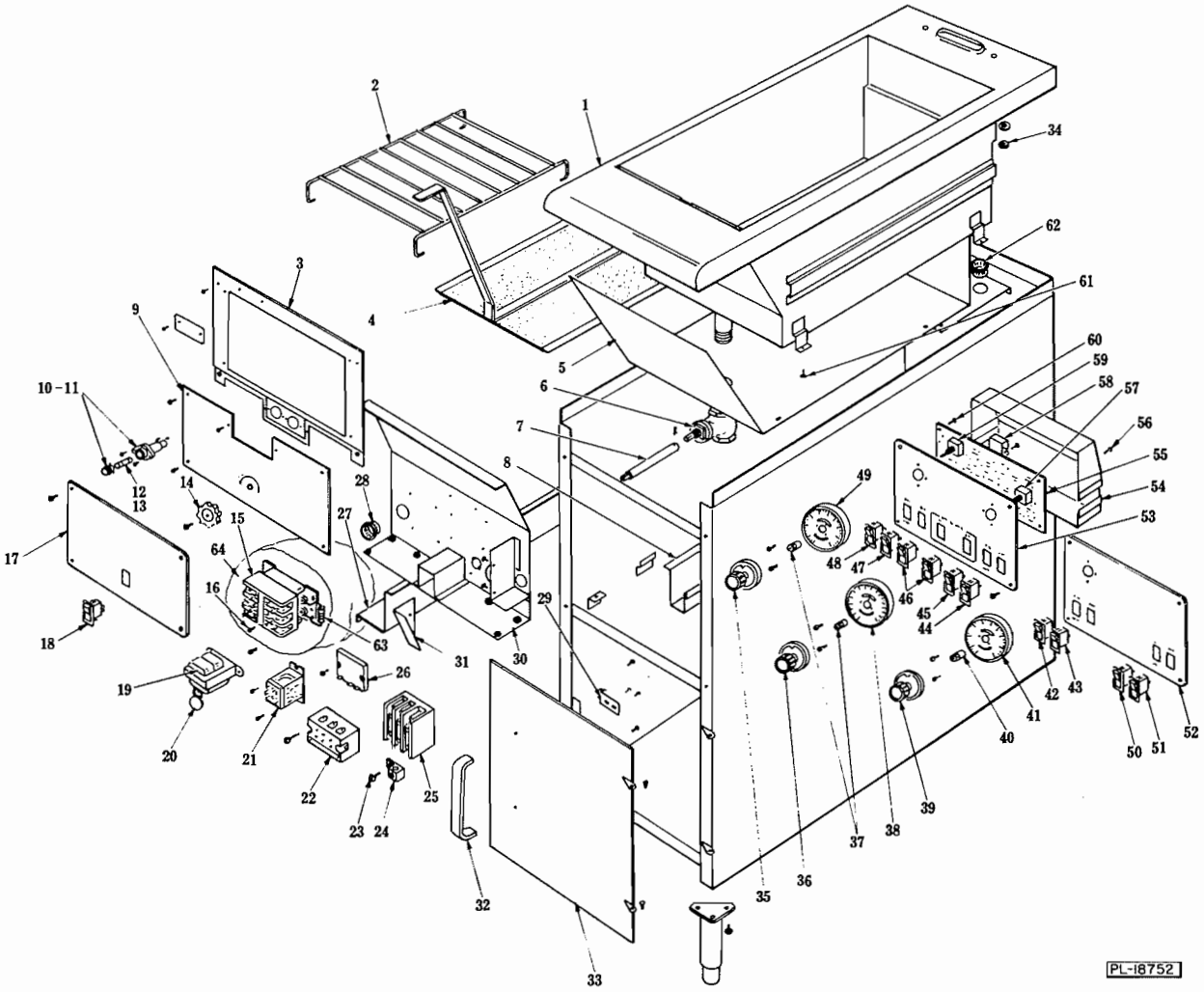

BODY UNIT

BODY UNIT

ILLUS. PL-18752	PART NO.	NAME OF PART	AMT.
1	341706-1	Container (Top)	1
2	341435-1	Rack - Basket Support	1
3	346140-1	Panel - Top Front	1
4	341366-1	Screen - Crumb	1
5	341705-1	Retainer - Bottom	1
6	348313-1	Valve - Drain	1
7	347147-1	Extension (Knob)	1
*,**8	346138-1	Cable Channel (R.H.)	1
9	346141-1	Panel - Bottom Front	1
10	344138-3	Fuse Holder (1 Amp.)	1
11	344138-2	Fuse Holder (15 Amp.)	1
12	FE-15-3	Fuse (1 Amp.)	1
13	FE-19-40	Fuse (15 Amp.)	1
14	347141-1	Valve Knob	1
15	346466-11	Contactor (30 Amp., 4 Pole, 115 V.)	2
16	SD-34-62	Self-Tapping Screw - #10-32 x 1/2" Slot Hex Washer Hd., Type T	4
***17	345872-4	Control Panel	1
***18	343224-18	Switch (Melt/Off/Fry) (DPDT)	1
*,**19	345754-1	Transformer (120/36 V., 7 Amp.)	1
*,**20	345837-1	Varistor - Transformer	1
*,**21	345335-4	Relay (SPDT, 10 Amp., 17 VDC Coil)	1
22	77656	Terminal Block (3 Pole, Neutral, 120 V.)	1
23	SD-34-62	Self-Tapping Screw - #10-32 x 1/2" Slot Hex Washer Hd., Type T	1
24	350700-2	Lug - Grounding	1
25	345504-1	Terminal Block - Main Power (3 Pole)	1
***26	345464-1	Timer (Solid State)	1
27	341343-2	Cable Tray (L.H.)	1
28	350866-1	Bushing (Wires)	2
29	346420-1	Catch - Door	AR
30	346134-1	Support Panel - Contactors	1
31	346136-1	Cover - Contactor Support	1
32	348514-1	Handle - Door	AR
33	341715-1	Door (Less Handle)	AR
34	NS-46-61	Mach. Nut - 5/16"-18 Hex	2
*35	345474-3	Knob - Temperature Setting	1
*36	345474-2	Knob - Computer Setting	1
*37	351422-28	Torque Nut - Potentiometer	2
*38	345874-1	Dial - Computer Setting (Support)	1
**39	345474-3	Knob - Temperature Setting	1
**40	351422-28	Torque Nut - Potentiometer	1
**41	345874-2	Dial - Temperature Setting	1
**42	343224-25	Switch - Rocker (SPST, On/Off - Melt/Fry)	1
**43	343224-23	Switch - Start (DPST, Rocker)	1
*44	343224-26	Switch - Test - Mon. On (Rocker, SPST)	1
*45	343224-25	Switch - Rocker (SPST, On/Off - Melt/Fry)	1
*46	343224-27	Switch - Computer Red (Rocker, SPST)	2
*47	343224-23	Switch - Start (DPST, Rocker)	1
*48	343224-25	Switch - Rocket (SPST, On/Off - Melt/Fry)	1
*49	345874-2	Dial - Temperature Setting	1
**50	343224-25	Switch - Rocker (SPST, On/Off - Melt/Fry)	1
**51	343224-26	Switch - Test - Mon. On (Rocker, SPST)	1
**52	345684-2	Panel - Front	1
*53	345684-1	Panel - Front	1
*,**54	345682-1	Rear Cover - Front Panel	1
*55	351436-61	Control Board (Incls. items #57 & 59)	1
*,**56	SD-34-49	Self-Tapping Screw - #8-32 x 1/2" Slot Hex Washer Hd., Type T	2
*57	345742-2	Potentiometer - Computer Setting	1
*58	345755-1	Buzzer (24 VAC Coil)	1
*,**59	345742-1	Potentiometer - Temperature Setting	1
*,**60	SC-114-83	Mach. Screw - #6-32 x 1/4" Pan Hd	4
61	SD-34-62	Self-Tapping Screw - #10-32 x 1/2" Slot Hex Washer Hd., Type T	4
62	350866-1	Bushing (Wires)	1
*,**63	345838-1	Resistor - Contactor Coil	2
64	347330-1	Bag - Contactor (Mylar)	1
	341657-1	Cover - Fat	1
	350869-1	Basket (Standard Mesh)	2
	342443-1	Basket (Fine Mesh)	2

*AK Series.
**DK Series.
***CK Series.