HOBART

CATALOG OF REPLACEMENT PARTS

CU27 SERIES
COMPACT UNDERCOUNTER
FOOD STORAGE CABINETS

CU27 REFRIGERATOR	ML-111169
CUF27 FREEZER	ML-111170
CUS27 REFRIGERATOR PREP	ML-111171



A product of HOBART CORPORATION 701 S. RIDGE AVENUE TROY, OHIO 45374-0001

FORM 34196 (2-99)

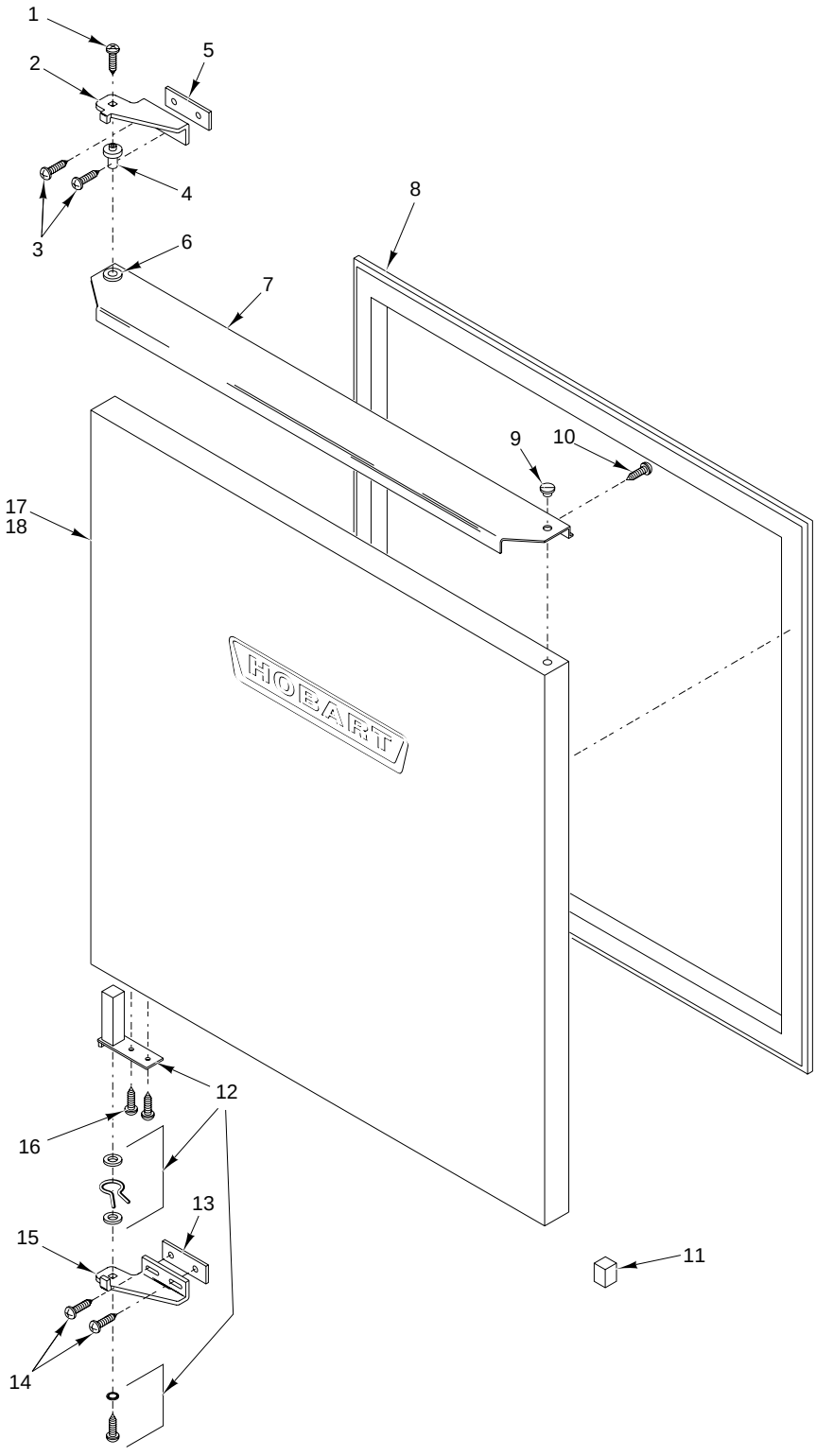

PL-53227

DOOR-CABINET

© HOBART CORPORATION, 1999

DOOR-CABINET

ILLUS. PL-53227	PART NO.	NAME OF PART	AMT.
1	SC-066-22	Mach. Screw 10-32 x ⅜ Truss Hd.	1
2	00-282544	Plate-Hinge (Lower RH,Upper LH)	1
3	SD-015-25	Self-Tapping Screw ¼-20 x ⅝ Hex Washer Hd., Type TT	2
4	00-433583	Pin-Upper Hinge Pivot	1
5	00-433756	Spacer-Hinge	1
6	00-267174	Bushing - Door Stop (Short)	1
7	00-433813-00001	Handle (Includes Bonding Tape)	1
8	00-433623	Gasket-Door	1
9	PB-004-26	Plug Button	1
10	SD-032-31	Self-Tapping Screw 8-18 x ⅜ Phil Pan Hd., Type B	4
11	00-433680	Square Plug	1
12	00-282543	Hinge-Power Cartridge Assy. (Incls. Spring, Washers & Retaining Screw)	1
13	00-433756	Spacer-Hinge	1
14	SD-015-25	Self-Tapping Screw ¼-20 x ⅝ Hex Washer Hd., Type TT	2
15	00-282545	Plate-Hinge (Lower LH,Upper RH)	1
16	SD-033-78	Self-Tapping Screw 10-24 x ½ Phil Truss Hd., Type D	4
17	00-433676-00002	Door Assy. (RH,SST)(Incls.Items 1 Thru 16)	1
18	00-433676-00001	Door Assy. (LH,SST)(Incls.Items 1 Thru 16)	1

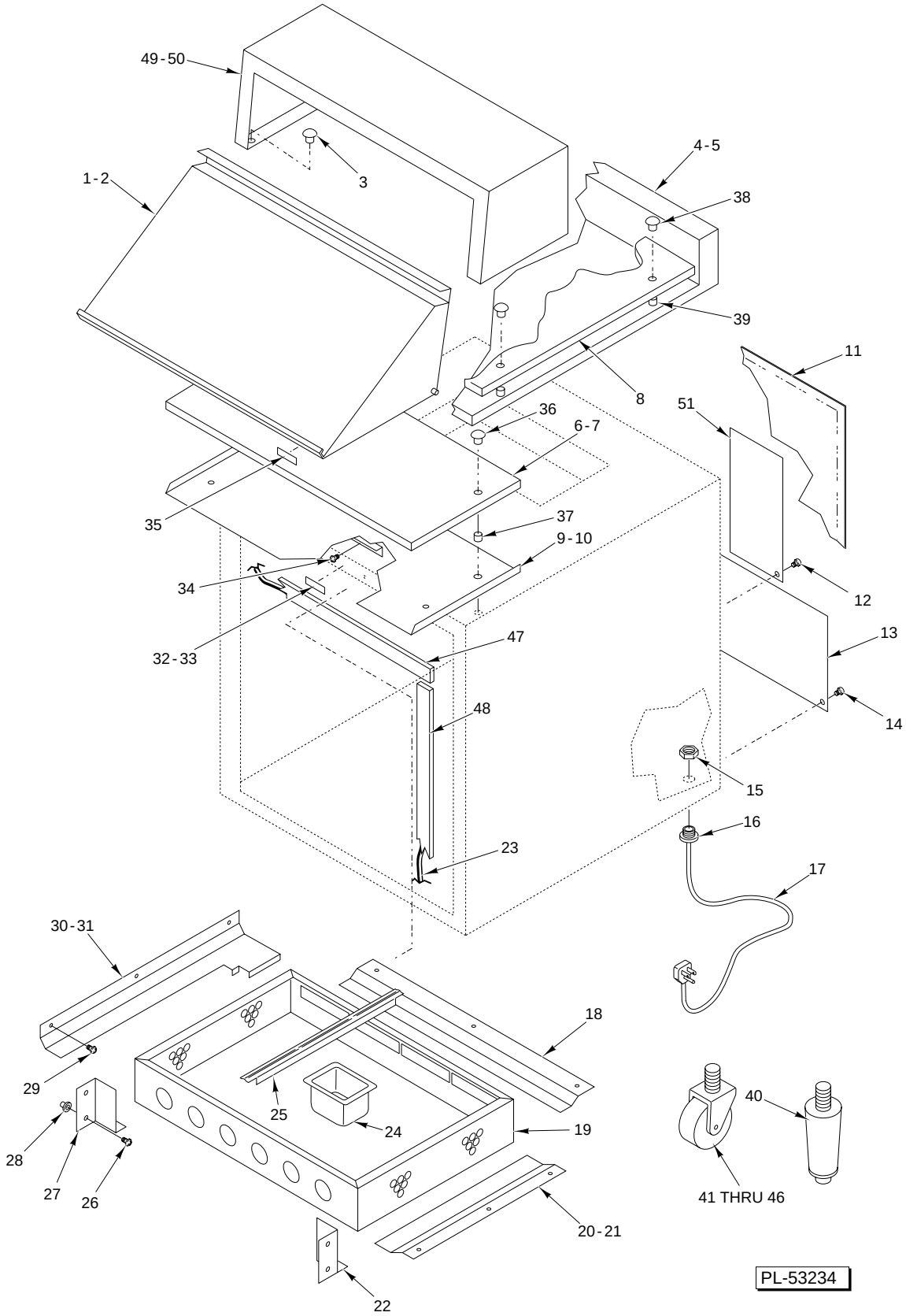

PANS-COVER/CUTTING BOARDS

PANS-COVER/CUTTING BOARDS

ILLUS. PL-53234	PART NO.	NAME OF PART	AMT.
1	00-433722	Cover (CUS27) 3 Row	1
2	00-433722-00004	Cover (CUS27) 2 Row	1
3	01-030235	Pin	4
4	00-433840	Top-Splashback Assy (W/Cutting Board)(CU27,CUF27)	1
5	00-433848	Top-Splashback Assy (W/O Cutting Board)	1
6	00-433687-00001	Board-Cutting 8 x 27	1
7	00-433687-00004	Board-Cutting 12 x 27	1
8	00-433687-00007	Full Cutting Board (CU27,CUF27)	1
9	00-433844-00001	Support-Board (CUS27) 3 Row	1
10	00-433844-00002	Support-Board (CUS27) 2 Row	1
11	00-433751-00001	Back	1
12	SD-008-40	Self-Tapping Screw 8-18 x ⅜ Phil. Truss Hd., Type B	6
13	00-433672	Cover-Lower Back	1
14	SD-008-40	Self-Tapping Screw 8-18 x ⅜ Phil. Truss Hd., Type B	4
15	FE-006-05	Lock Nut ½	1
16	FE-022-84	Connector - Strain Relief	1
17	00-239000	Cord 115 V., 15A Service	1
18	00-433742-00003	Support-Transverse (23½ Lg)	2
19	00-433743	Duct	1
20	00-433742-00002	Support-Pan (12⅜ Lg)	2
21	00-433742-00001	Support-Pan (18½ Lg)	2
22	00-433745-00001	Retainer-Duct RH	1
23	00-433582-00001	Heater-Perimeter (Door)	1
24	00-269971-00001	Pan 1/6 x 4 Cambro	AR
25	00-269970-00002	Divider (20 Lg)	AR
26	00-266357-00002	Screw - Knurled Thumb (Chrome Finish)	4
27	00-433745-00002	Retainer-Duct LH	1
28	00-265780-00001	Insert - Avdel	4
29	SD-032-31	Self-Tapping Screw 8-18 x ⅜ Phil Pan Hd., Type B	20
30	00-433744-00002	Support-Duct LH	1
31	00-433744-00001	Support-Duct RH	1
32	00-433592	Refrigerator Label (CU27)	1
33	00-433593	Frozen Food Label (CUF27)	1
34	SD-015-25	Self-Tapping Screw ¼-20 x ⅝ Hex Washer Hd., Type TT	2
35	00-432903	Operator Temp Label (CUS27)	1
36	01-030235	Pin	2
37	00-265780-00009	Insert	2
38	01-030235	Pin	4
39	00-265780-00009	Insert	4
40	00-430038	Leg	4
41	00-282559-00001	Caster W/Brake (3")	2
42	00-282559-00002	Caster W/O Brake (3")	2
43	00-284185-00013	Caster W/Brake (2½")	2
44	00-284185-00014	Caster W/O Brake (2½")	2
45	00-430415-00001	Caster W/Brake (5")	2
46	00-430415-00002	Caster W/O Brake (5")	2
47	00-433783-00002	Molding-Seal Horizontal	2
48	00-433783-00001	Molding-Seal Vertical	2
49	00-433648	Shelf (CUS27) 3 Row	1
50	00-433648-00004	Shelf (CUS27) 2 Row	1
51	00-433667	Cover-Raceway	1

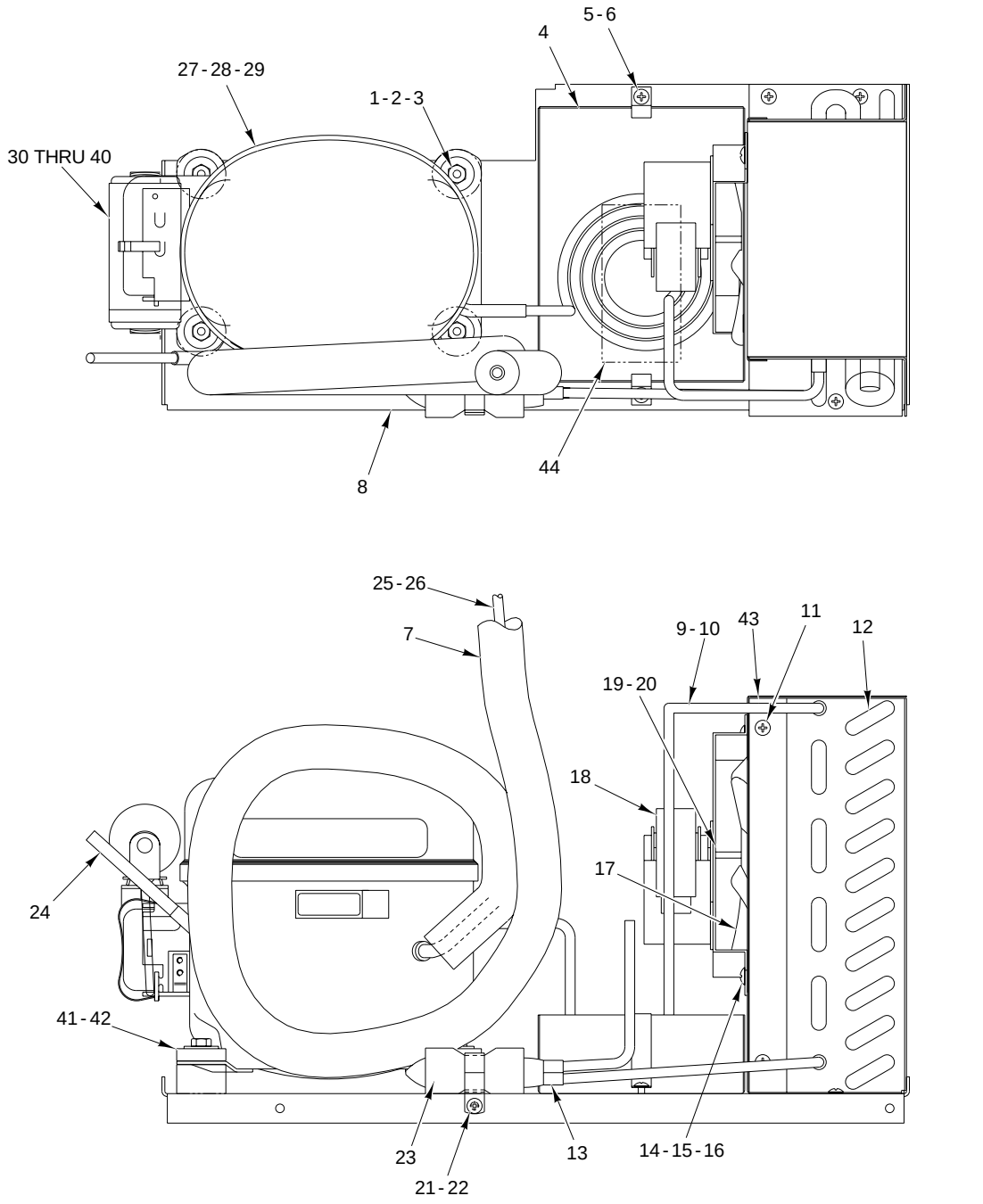

PL-53230

CONDENSER UNIT

CONDENSER UNIT

ILLUS. PL-53230	PART NO.	NAME OF PART	AMT.
1	SC-114-68	Mach.Screw ¼-20 x 1½ Hex Hd.	4
2	WS-029-46	Washer	4
3	NS-013-02	Full Nut ¼-20 Hex	4
4	00-433663	Pan-Condensate	1
5	00-433662	Clip	2
6	SD-032-31	Self-Tapping Screw 8-18 x ⅜ Phil Pan Hd., Type B	5
7	00-548126	Tube-⅜ Closed Cell (Rubatex)	AR
8	00-433656	Plate-Condensing Unit	1
9	00-433759-00001	Tube-Discharge (CU27,CUS27)(Incls.Item 44)	1
10	00-433759-00002	Tube-Discharge (CUF27)(Incls.Item 44)	1
11	SD-008-40	Self-Tapping Screw 8-18 x ⅜ Phil. Truss Hd., Type B	4
12	00-433633	Coil-Condenser	1
13	00-433595	Dryer Assy	1
14	SA-021-09	Screw Assy. 10-32 x ½ Ext. Washer Hex Hd.	2
15	00-265780-00001	Insert - Avdel	2
16	00-279994	Fan Bracket Assy.	1
17	00-430060	Blade-Fan	1
18	00-430061-00002	Motor-Evaporator Fan	1
19	WL-007-07	Lockwasher 8 External Shakeproof	2
20	NS-009-12	Mach. Nut 8-32 Hex	2
21	00-122577-00002	Wire Tie	1
22	SD-008-40	Self-Tapping Screw 8-18 x ⅜ Phil. Truss Hd., Type B	1
23	00-529781	Tape-Foam	1
24	00-267201	Extension	1
25	00-433691	Tube-Suction (CUF27)	1
26	00-433647	Tube-Suction (CU27,CUS27)	1
27	00-433600-00001	Compressor (CU27)(Incls.Items 38 & 42)	1
28	00-433601-00001	Compressor (CUS27) Incls.Items 39 & 42)	1
29	00-433602-00001	Compressor (CUF27)(Incls.Items 40 & 41)	1
30	00-433606	Capacitor (CU27,CUS27)	1
31	00-433606-00002	Capacitor (CUF27)	1
32	00-433608	Relay (CU27)	1
33	00-433608-00003	Relay (CUF27)	1
34	00-433608-00002	Relay (CUS27)	1
35	00-433692	Protector-Overload (CU27)	1
36	00-433692-00003	Protector-Overload (CUF27)	1
37	00-433692-00002	Protector-Overload (CUS27)	1
38	00-433603	Starter Assy.-Compressor (CU27)(Incls.Items 30,32 & 35)	1
39	00-433603-00002	Starter Assy.-Compressor (CUS27)(Incls.Items 30,34 & 37)	1
40	00-433603-00003	Starter Assy.-Compressor (CUF27)(Incls.Items 31,33 & 36)	1
41	00-433696-00001	Shock Absorber (CUF27)(Incls. Grommet & Sleeve)	4
42	00-433695-00001	Shock Absorber (CU27,CUS27)(Incls. Grommet & Sleeve)	4
43	00-433658	Shroud	1
44	00-268160	Pad-Dish	1

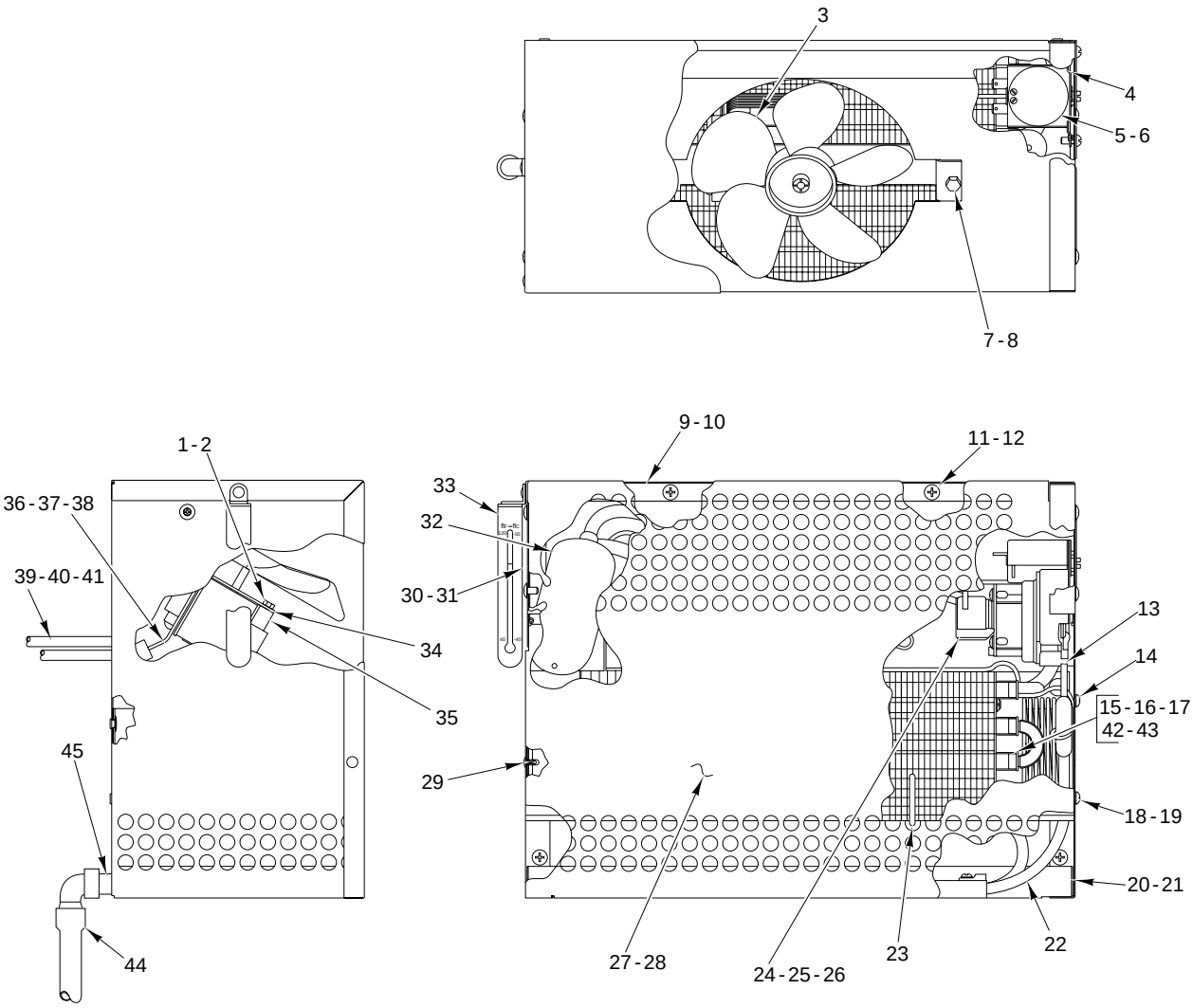

EVAPORATOR UNIT

PL-53228

EVAPORATOR UNIT

ILLUS. PL-53228	PART NO.	NAME OF PART	AMT.
1	WL-007-07	Lockwasher 8 External Shakeproof	2
2	NS-009-12	Mach. Nut 8-32 Hex	2
3	00-433090	Blade - Evaporator Fan	1
4	00-282916	Plate-Indicator (CUF27)	1
5	00-433599	Control-Freezer (CUF27)	1
6	00-433598	Control-Refrigerator (CU27,CUS27)	1
7	00-265780-00001	Insert - Avdel	2
8	SA-021-09	Screw Assy. 10-32 x ½ Ext. Washer Hex Hd.	2
9	00-433637	Panel-Evaporator (CU27,CUF27)	1
10	00-433749	Panel-Evaporator (CUS27)	1
11	SD-033-33	Self-Tapping Screw 8-18 x ⅝ Phil Truss Hd., Type A	4
12	WL-007-07	Lockwasher 8 External Shakeproof	1
13	00-280599	Timer - Defrost	1
14	SD-009-34	Self-Tapping Screw 6-32 x ⅜ Phil Pan Hd., Type F	2
15	00-433718	Evaporator (CUF27) (Incls.Items 32,39,41 & 42)	1
16	00-433717	Evaporator (CU27) (Incls.Items 40 & 43)	1
17	00-433735	Evaporator (CUS27) (Incls.Items 40 & 42)	1
18	SD-032-31	Self-Tapping Screw 8-18 x ⅜ Phil Pan Hd., Type B	8
19	WL-007-07	Lockwasher 8 External Shakeproof	1
20	00-433640-00002	Side-Evaporator Housing-RH (Perm-A-Shield)(CU27,CUF27)	1
21	00-433747-00001	Side-Evaporator Housing-RH (SST)(CUS27)	1
22	00-433669	Heater-Defroster Assy.(CUF27)	1
23	00-433588	Clip (CUF27)	1
24	00-269122	Thermostat-Safety (CUF27)	1
25	00-239872	Bracket-Thermostat (CUF27)	1
26	SD-008-40	Self-Tapping Screw 8-18 x ⅜ Phil. Truss Hd., Type B (CUF27)	4
27	00-433636-00002	Cover (Perm-A-Shield)(CU27,CUF27)	1
28	00-433746-00001	Cover (SST)(CUS27)	1
29	00-239309-00005	Plug	3
30	00-433639-00002	Side-Evaporator Housing-LH (Perm-A-Shield)(CU27,CUF27)	1
31	00-433748-00001	Side-Evaporator Housing-LH (SST)(CUS27)	1
32	00-433589	Accumulator (CUF27)	1
33	00-430037	Thermometer	1
34	00-279994	Fan Bracket Assy.	1
35	00-430061-00002	Motor-Evaporator Fan	1
36	00-433812	Harness-Wiring (CUS27)	1
37	00-433618-00001	Harness-Wiring (CU27)	1
38	00-433619-00001	Harness-Wiring (CUF27)	1
39	00-433596	Tube-Suction (Evaporator to Compressor)(CUF27)	1
40	00-433597	Tube-Suction (Evaporator to Compressor)(CU27,CUS27)	1
41	00-433713	Tube-Suction (Evaporator to Accumulator)(CUF27)	1
42	00-433635	Coil-Evaporator (CUF27,CUS27)	1
43	00-433634	Coil-Evaporator (CU27)	1
44	00-433732	Line-Evaporator Drain Assy	1
45	00-433671	Pan-Drain	1

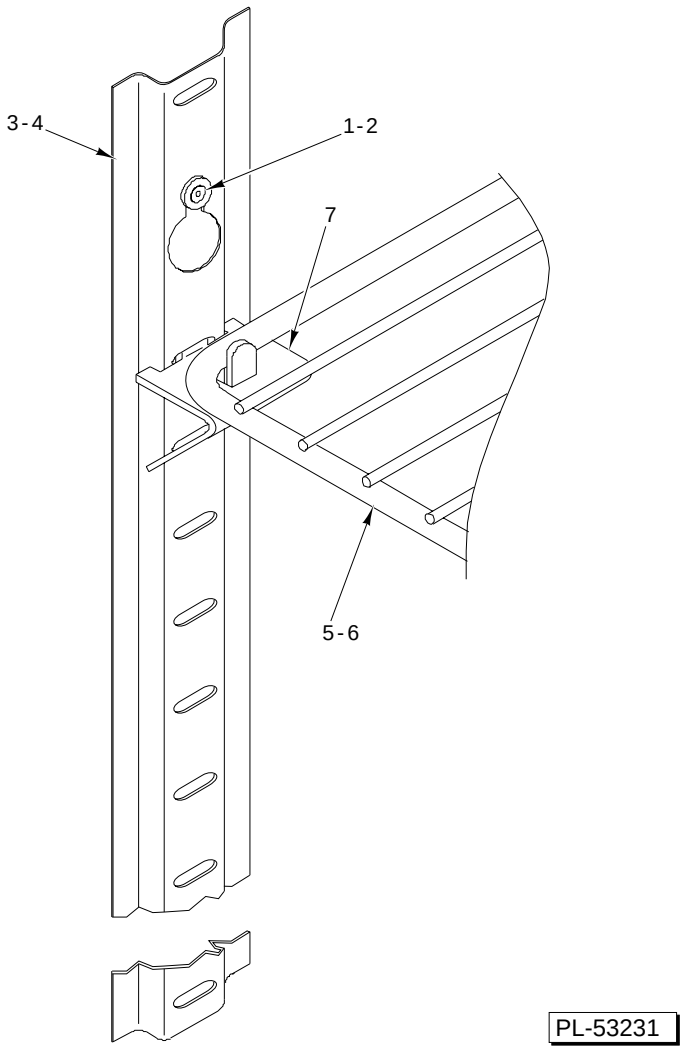

PILASTER-SHELVES

ILLUS. PL-53231	PART NO.	NAME OF PART	AMT.
1	00-433673	Support-Keyhole	16
2	RS-030-17	Rivet-Pop (⅛ x ½ Lg.,Alum)	16
3	00-433660	Pilaster-Keyhole Shelf (CU27,CUF27)(24"Lg.)	4
4	00-433660-00004	Pilaster-Keyhole Shelf (CUS27)(19"Lg.)	4
5	00-433674-00002	Shelf (Powder Coated)	2
6	00-433674-00003	Shelf (Stainless Steel)	2
7	00-433661	Clip-Support	8

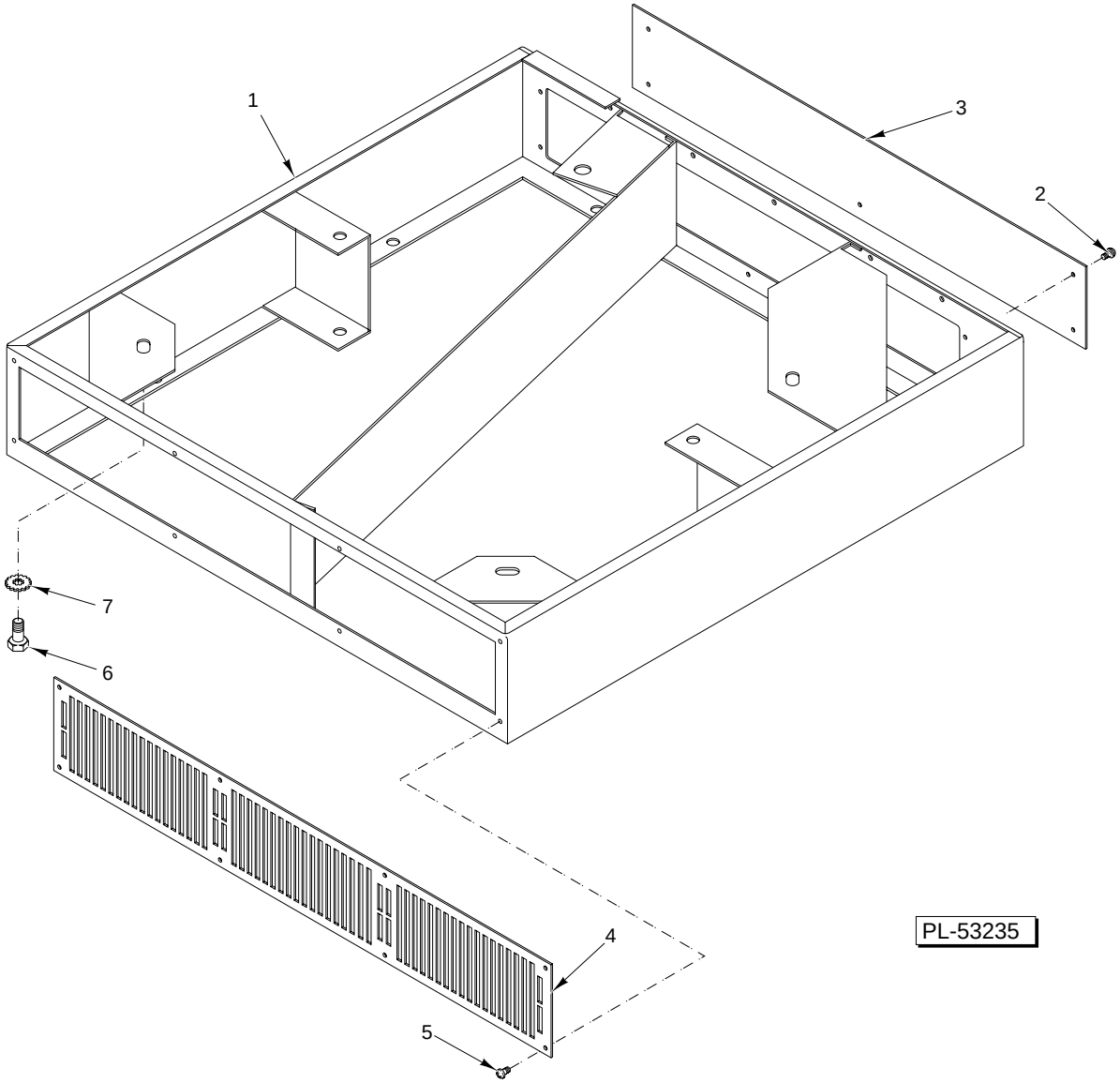

UTILITY BASE

ILLUS. PL-53235	PART NO.	NAME OF PART	AMT.
1	00-433738	Utility Base	1
2	SD-008-40	Self-Tapping Screw 8-18 x ⅜ Phil. Truss Hd., Type B	5
3	00-433702	Cover-Rear	1
4	00-433757	Cover-Front	1
5	SD-008-40	Self-Tapping Screw 8-18 x ⅜ Phil. Truss Hd., Type B	8
6	SC-097-18	Cap Screw ½-13 x ¾ Hex Head	4
7	WL-019-44	Lockwasher ½ Internal/External Shakeproof (Steel)	4

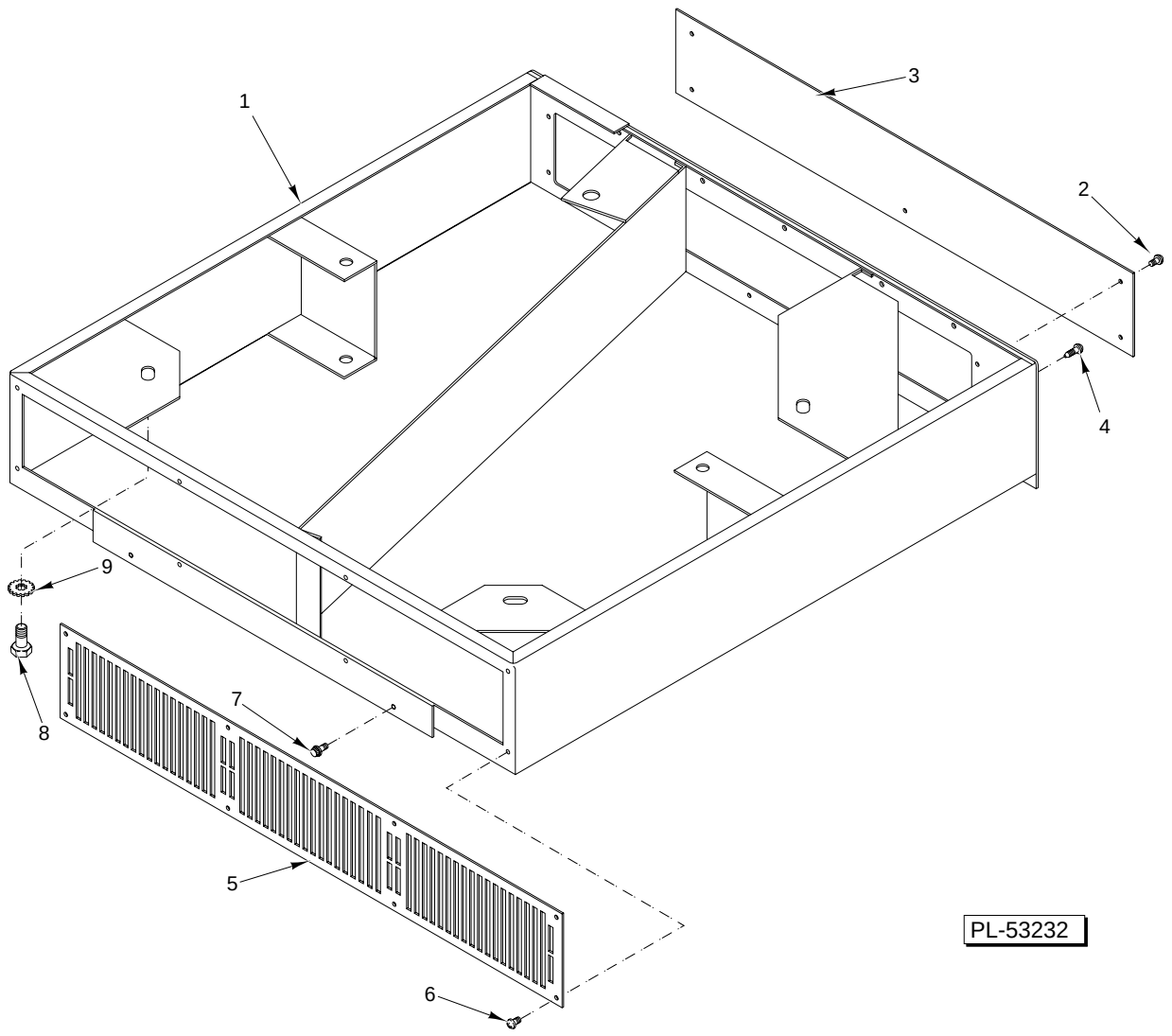

STACKING BASE

ILLUS. PL-53232	PART NO.	NAME OF PART	AMT.
1	00-433700	Stacking Base	1
2	SD-008-40	Self-Tapping Screw 8-18 x ⅜ Phil. Truss Hd., Type B	5
3	00-433702	Cover-Rear	1
4	SD-017-14	Self-Tapping Screw 10 x 1½ Phil. Truss Hd., Type AB	5
5	00-433757	Cover-Front	1
6	SD-008-40	Self-Tapping Screw 8-18 x ⅜ Phil. Truss Hd., Type B	13
7	SD-015-25	Self-Tapping Screw ¼-20 x ⅝ Hex Washer Hd., Type TT	2
8	SC-097-18	Cap Screw ½-13 x ¾ Hex Head	4
9	WL-019-44	Lockwasher ½ Internal/External Shakeproof (Steel)	4