HOBART

INSTRUCTION MANUAL

... with Replacement Parts

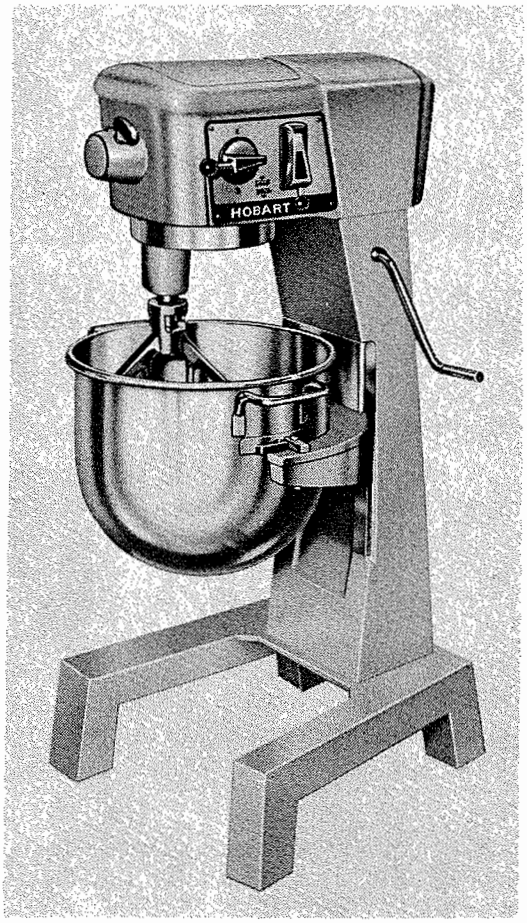

MODEL D-300 SERIES MIXERS

(INCLUDES MOTOR PARTS)

ML-19544 D-300 (W & W/O Overload Protection)
ML-19547 D-300-T (Timed)
ML-19550 D-300-D (W & W/O Overload Protection)
ML-19819 D-300-DT (Timed)

THIS MANUAL REPLACES AND SHOULD BE USED INSTEAD OF FORMS 10373F (2-77) & 12649 (2-78)

PRIOR ML'S COVERED IN THIS MANUAL:

ML-17684 D-300 (W & W/O Overload Protection)
ML-17685 D-300-T (Timed)
ML-17686 D-300-D (W & W/O Overload Protection)
ML-17687 D-300-DT (Timed)

A product of HOBART CORPORATION TROY, OHIO 45374

FORM 13510 (2-81)

Instructions for Operation and Care of MODEL D-300 SERIES MIXERS

Save These Instructions

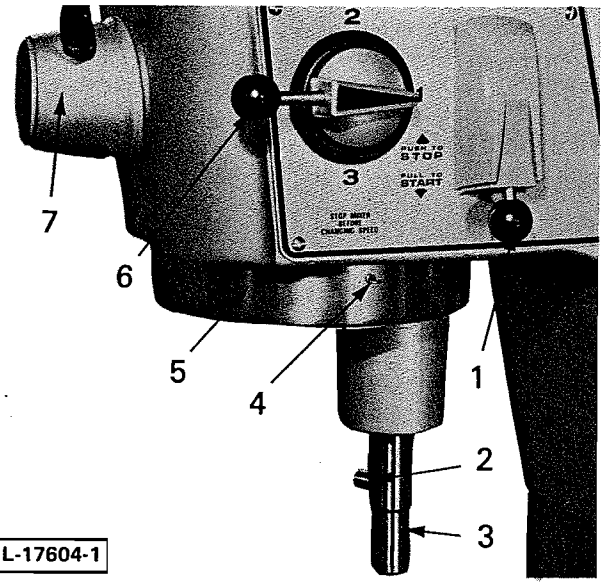

Fig. 1

GENERAL

The D-300 series mixers have a bowl capacity of 30 quarts. With the use of an adapter and a special agitator, a 20 quart bowl may also be used. The mixer is powered by a 1/2 H.P. motor and is available for single- or three-phase electrical service.

The D-300 series mixers incorporate a #12 attachment hub (7, Fig. 1). Various attachments and accessories available for this mixer include: Model 12 Power Dicer; Model 12 Vegetable Slicer; Model 12 Meat and Food Chopper; Soup Strainer and Colander; Model 12 Speed Drive (for use with Model 12 Vegetable Slicer only); Tray Support; Bowl Jacket; Bowl Truck and Splash Cover.

INSTALLATION

LOCATION

Mixer should be placed in a convenient location allowing adequate servicing space on the operational controls side, above and in front of the mixer. A Deck Plate Kit is available from Hobart for permanent bolting to the floor, although this is not necessary in normal installations.

ELECTRICAL CONNECTIONS

Before making electrical connections, check the specifications on the data plate (2, Fig. 2) to assure they agree with those of your electrical service. Electrical and grounding connections must comply with the applicable portions of the National Electrical Code and/or other local electrical codes.

WARNING: DISCONNECT ELECTRICAL POWER SUPPLY AND PLACE A TAG AT THE MAIN CIRCUIT BOX INDICATING THE CIRCUIT IS BEING WORKED ON.

BRANCH CIRCUIT SIZE AND PROTECTION

DUAL ELEMENT TIME-DELAY FUSE

Volts	Phase	Min. Ckt. Ampacity	Max. Fuse Size	60°C Copper Wire Size
115	1	20	20	12
200	1	15	10	14
230	1	15	10	14
200	3	15	6	14
230	3	15	6	14
460	3	15	3	14

INVERSE TIME CIRCUIT BREAKER

Volts	Phase	Min. Ckt. Ampacity	Max. Ckt. Bkr. Size	60°C Copper Wire Size
115	1	20	20	12
200	1	15	15	14
230	1	15	15	14
200	3	15	6	14
230	3	15	6	14
460	3	15	3	14

NOTE: The above information compiled in accordance with the National Electrical Code, 1981 edition.

A hole for 3/4" conduit is located at the bottom of the pedestal (3, Fig. 2). Connect the input power leads to the pigtail leads from the machine controls. A green pigtail lead is provided for the service ground.

Three-phase machines must be connected so the planetary turns in the direction of the arrow on drip cup (5, Fig. 1). To check the direction of rotation, turn the power disconnect switch ON. Place the speed selector handle (6, Fig. 1) in #1. If machine is equipped with optional timer, place timer on HOLD. Energize machine momentarily and verify the direction of rotation.

If motor rotation is incorrect, **DISCONNECT ELECTRICAL POWER SUPPLY** and interchange any two of the power supply leads.

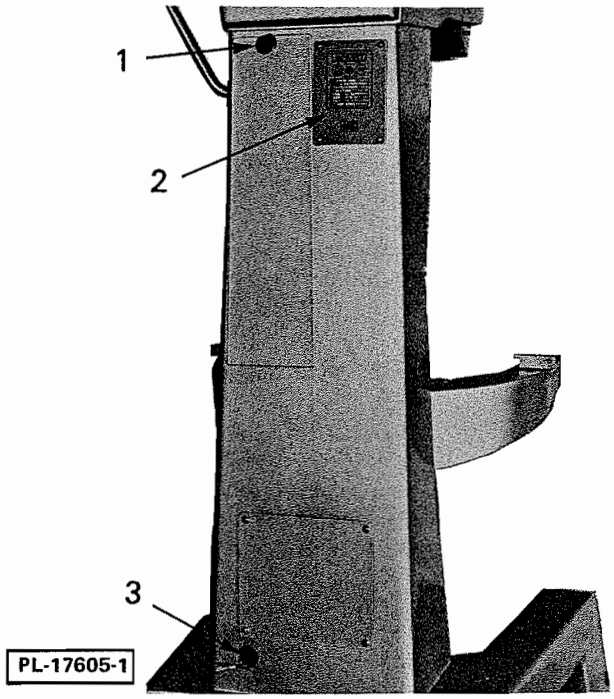

Fig. 2

OPERATION

CONTROLS

The D-300 series mixers may be operated in any of three speeds. With the mixer stopped, the speed selection is made by moving the speed selector handle (6, Fig. 1) to the desired speed. Never change speeds while mixer is running.

SPEED #1 is a slow speed for heavy mixtures such as bread dough.
SPEED #2 is an intermediate speed for light dough which must rise quickly or for whipping.
SPEED #3 is a fast speed for light work like whipping cream, beating eggs and mixing thin batters.

D-300; D-300-D

Turn power supply to mixer ON. Set the speed selector handle (6, Fig. 1) at the desired speed and pull START-STOP switch (1, Fig. 1) to start machine.

To change speeds, turn the motor off (1, Fig. 1). Allow the planetary to stop rotating. Move the speed selector handle (6, Fig. 1) to the desired speed. Make certain the speed selector handle lines up with the number on the shift selector plate. Never position the handle between numbers. Restart the mixer.

D-300-T; D-300-DT

For non-timed operation, set the speed selector handle at the desired speed. Set the timer on HOLD and depress the START button.

For timed operation, set the speed selector handle at the desired speed. Set the timer at the desired time (if less than 3 minutes, turn past "3" and back to the desired time), and depress the START button.

To change speeds, turn the motor off by pushing the STOP button. When the agitator shaft has stopped, move the speed selector handle to the desired speed. Make certain the speed selector handle lines up with the number on the shift selector plate. Never position the handle between numbers. Restart the mixer.

BOWL LIFT

Pull the lift handle (1, Fig. 3) forward to lower the bowl support (4, Fig. 3). It is necessary to lower the bowl to change agitators. This also makes the bowl more accessible for filling. When raising the bowl, rotate the lift handle counterclockwise until it touches the stop. To mash potatoes or to cream butter, start with bowl down and raise it slowly into working position while the agitator is rotating.

BOWL

Lower the bowl support (4, Fig. 3) to its bottom stop. Position the bowl so the square alignment bracket is to the back and sits under the bowl retainer (6, Fig. 3). Locate the alignment pins (5, Fig. 3) into the alignment holes of the bowl. Lock the bowl in place by rotating bowl clamps (3, Fig. 3) over the ears of the bowl. New mixer bowls and

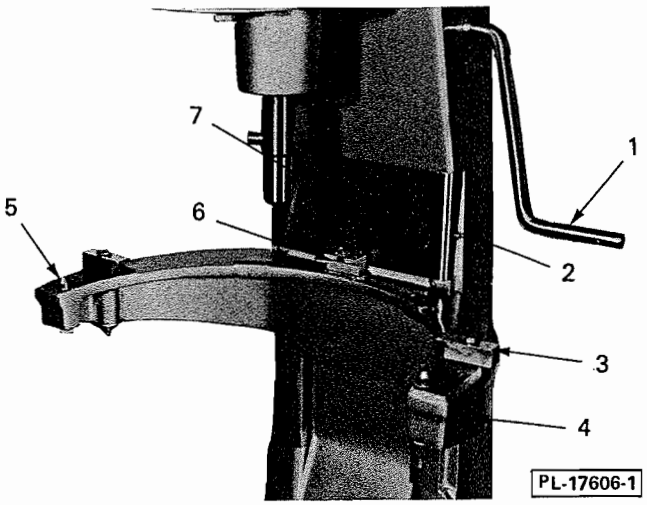

Fig. 3

agitators (beaters, whips and dough arms) should be thoroughly washed with hot water and a mild soap solution, rinsed with either a mild soda or vinegar solution and thoroughly rinsed with clear water BEFORE being put into service.

AGITATORS

When attaching an agitator, the bowl must be in place on the bowl support and in the down position. Slip the agitator up on the shaft (3, Fig. 1) and turn it until the driving pin in the shaft (2, Fig. 1) reaches the L-shaped slot in the agitator shank. Agitators which may be used with this mixer are shown on the last page of this manual.

The style "B" beater is commonly used for thin batters, cakes and mashing potatoes. The style "D" whip is best for whipping cream and beating eggs. Two other styles frequently used are the "ED" dough arm for bread doughs, and the "P" pastry knife for cutting shortening into flour for pastry. The "C" wing whip is for heavy whipping, including butter.

ATTACHMENTS

Insert the attachment with a slight twist to the left so that the stop stud of the attachment is tight against the side of the hole (2, Fig. 4) in the mixer. When in place, tighten the thumb screw (1, Fig. 4). The attachment speed is selected by the speed selector handle (6, Fig. 1). It is RECOMMENDED that most chopping operations be carried out in speed #3.

Use the mixer START-STOP switch to start and stop attachments. Always stop the mixer before changing the speed of an attachment.

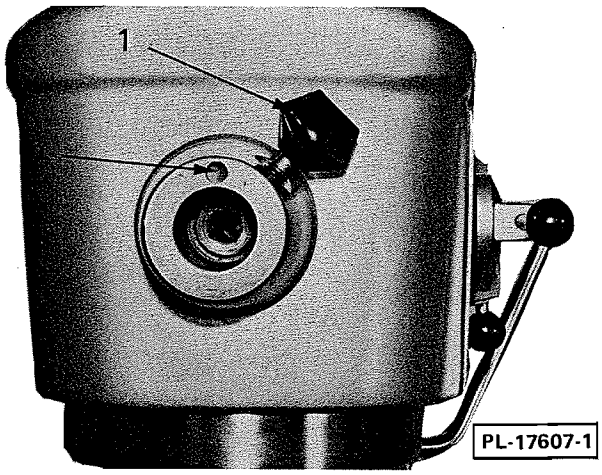

Fig. 4

The Speed Drive may be used with the Vegetable Slicer to increase the speed of operation. DO NOT use any other attachment with the Speed Drive.

MAINTENANCE

WARNING: DISCONNECT ELECTRICAL POWER SUPPLY AND PLACE A TAG AT MAIN CIRCUIT BOX INDICATING CIRCUIT IS BEING WORKED ON BEFORE BEGINNING ANY MAINTENANCE PROCEDURE.

CLEANING

The mixer should be wiped down with a damp towel after each mixing operation. The mixing bowl, beaters or attachments should be thoroughly washed and rinsed at the end of each operation. The mixer and any attachments or accessories used should be thoroughly washed and rinsed at the end of each working shift or whenever the machine is to be out of service for long periods of time (overnight).

LUBRICATION

Motor

The motor has grease-packed ball bearings and requires little attention. The transmission gearing is packed with special grease that will last for several years. When grease is needed for replacement, it should be ordered from your local Hobart Representative.

Bowl Slideways

Remove two thumb screws (2, Fig. 3) and lift off apron (7, Fig. 3) to expose bowl slideways. Lubricate slideways by applying a small amount of Lubriplate 630AA (supplied) with the tip of the finger.

Bowl Lift

Loosen the access cover knob (1, Fig. 2) and lift off cover. Lightly coat moving parts with Lubriplate 630AA (supplied). Replace cover and knob.

The polished drip cup (5, Fig. 1) is a safe-guard to prevent any lubricant or moisture that may have collected on the planetary from dropping into the bowl. Remove the drip cup (by removing two thumb screws (4, Fig. 1) and pulling straight down) once a month and wipe it clean.

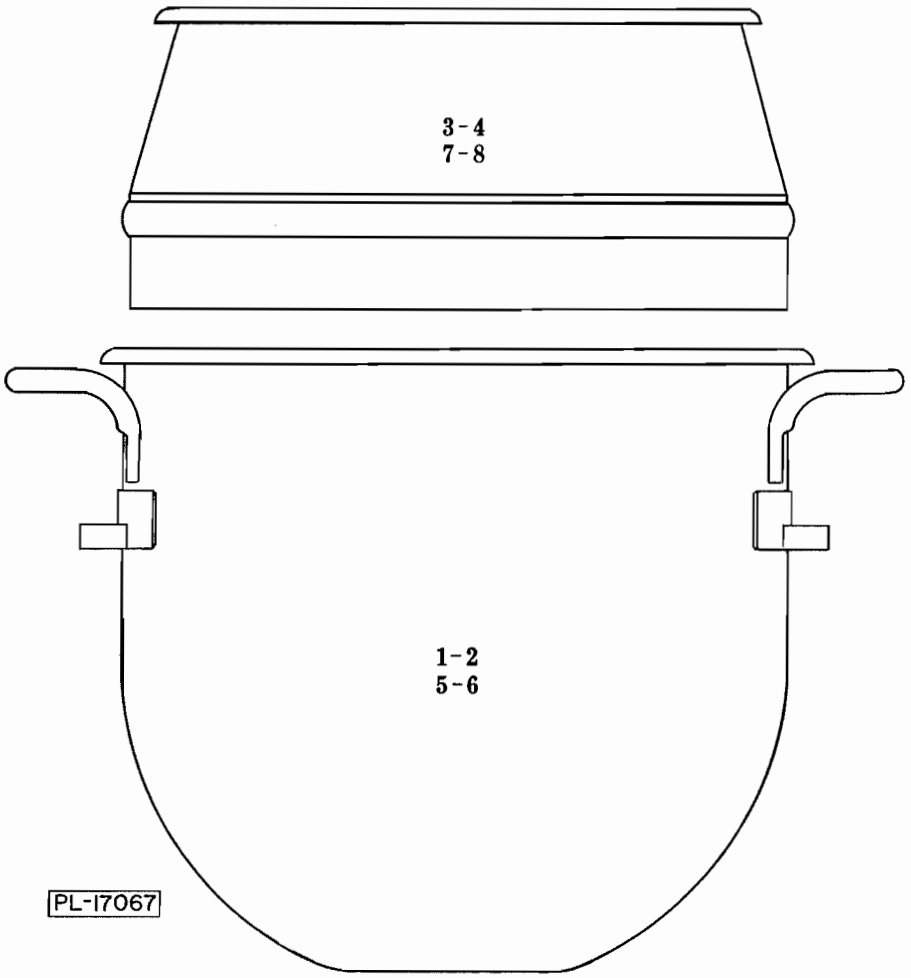

BOWL

ILLUS. PL-17067	PART NO.	NAME OF PART	AMT.
1	D-104413	Bowl - 30 Qt. (Tinned)	1
2	E-115228	Bowl - 20 Qt. (Not Shown) (Tinned)	1
3	S-70497-1	Splash Cover Assy. (30 Qt.) (Tinned)	1
4	S-20531-1	Splash Cover Assy. (20 Qt.) (Tinned)	1
5	D-104414	Bowl - 30 Qt. (SST)	1
6	E-115229	Bowl - 20 Qt. (SST)	1
7	S-70497-2	Splash Cover Assy. (30 Qt.) (SST)	1
8	S-20531-2	Splash Cover Assy. (20 Qt.) (SST)	1

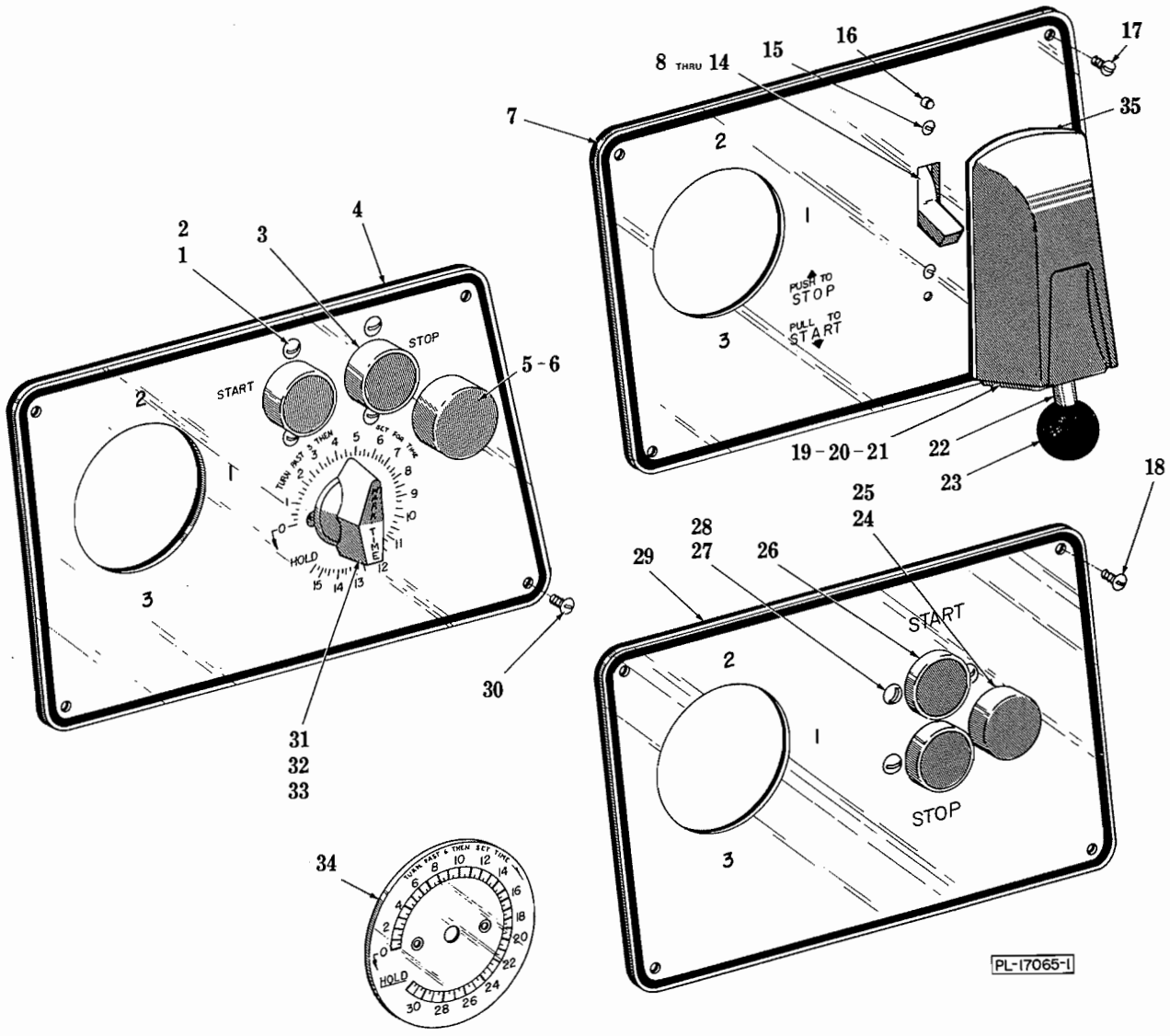

TIMER, CONTROL AND SWITCH UNIT

TIMER, CONTROL AND SWITCH UNIT

ILLUS. PL-17065-1	PART NO.	NAME OF PART	AMT.
1	SC-15-26	Mach. Screw - #8-32 x 5/16" Oval Hd	4
2	WS-2-18	Washer	4
3	P-87711-102-1	Station - Push Button	2
4	D-117852	Plate - Switch & Timer	1
5	A-102467-1	Cap - Push Button (Start)	1
6	A-102467-2	Cap - Push Button (Stop)	1
7	D-117864	Plate - Manual Switch	1
8	P-87711-99-4	Switch - Manual (1 Ph.)	1
9	P-87711-99-2	Switch - Manual (200/230 V., 60 Hz.; 220 V., 50 Hz.) (3 Ph.)	1
***10	P-87711-57-1	Switch - Manual (460 V., 60 Hz.; 380 V., 50 Hz.) (3 Ph.)	1
**11	P-87810-19-1	Switch - Manual (Less Elements) (1 Ph.)	1
**12	P-87810-26-1	Switch - Manual (Less Elements) (3 Ph.)	1
13	*	Heater Element - Manual Switch	AR
14	M-70262	Insulator - Switch (460 V., 60 Hz.; 380 V., 50 Hz.) (3 Ph.)	1
15	SC-9-49	Mach. Screw - #6-32 x 3/8" Rd. Hd	2
16	SD-15-41	Self-Tapping Screw - #8-32 x 1/2" Phil. Pan Hd. "Taptite"	2
17	B-123109	Screw - Special	4
18	B-123109	Screw - Special	4
19	A-105305	Switch Rod & Housing Assy. (Incls. items #20 thru 23)	1
20	D-105150	Housing - Switch Seal	1
21	B-121559	Sleeve - Actuating Rod	1
22	B-121237	Rod - Switch Actuating	1
23	A-105197	Knob	1
24	A-102467-1	Cap - Push Button (Start)	1
25	A-102467-2	Cap - Push Button (Stop)	1
26	P-87711-102-1	Station - Push Button	2
27	SC-15-26	Mach. Screw - #8-32 x 5/16" Oval Hd	4
28	WS-2-18	Washer	4
29	D-117851	Plate - Magnetic Switch	1
30	B-123109	Screw - Special	4
31	A-103228	Timer & Gasket Assy. (15 Min.) (Incls. item #33)	1
32	A-103229	Timer, Dial & Gasket Assy. (30 Min.) (Incls. items #33 & 34)	1
33	SC-13-7	Mach. Screw - #5-40 x 1/4" Flat Hd	2
34	B-73540	Dial - Timer (30 Min.)	1
35	A-105050	Gasket - Switch Housing	1
	M-61285-1	Boot - Insulating (Not Shown)	AR

*Give Elec. Spec., Mach. Model & Motor Type.
**W/ Overload Protection.
***W/O Overload Protection.

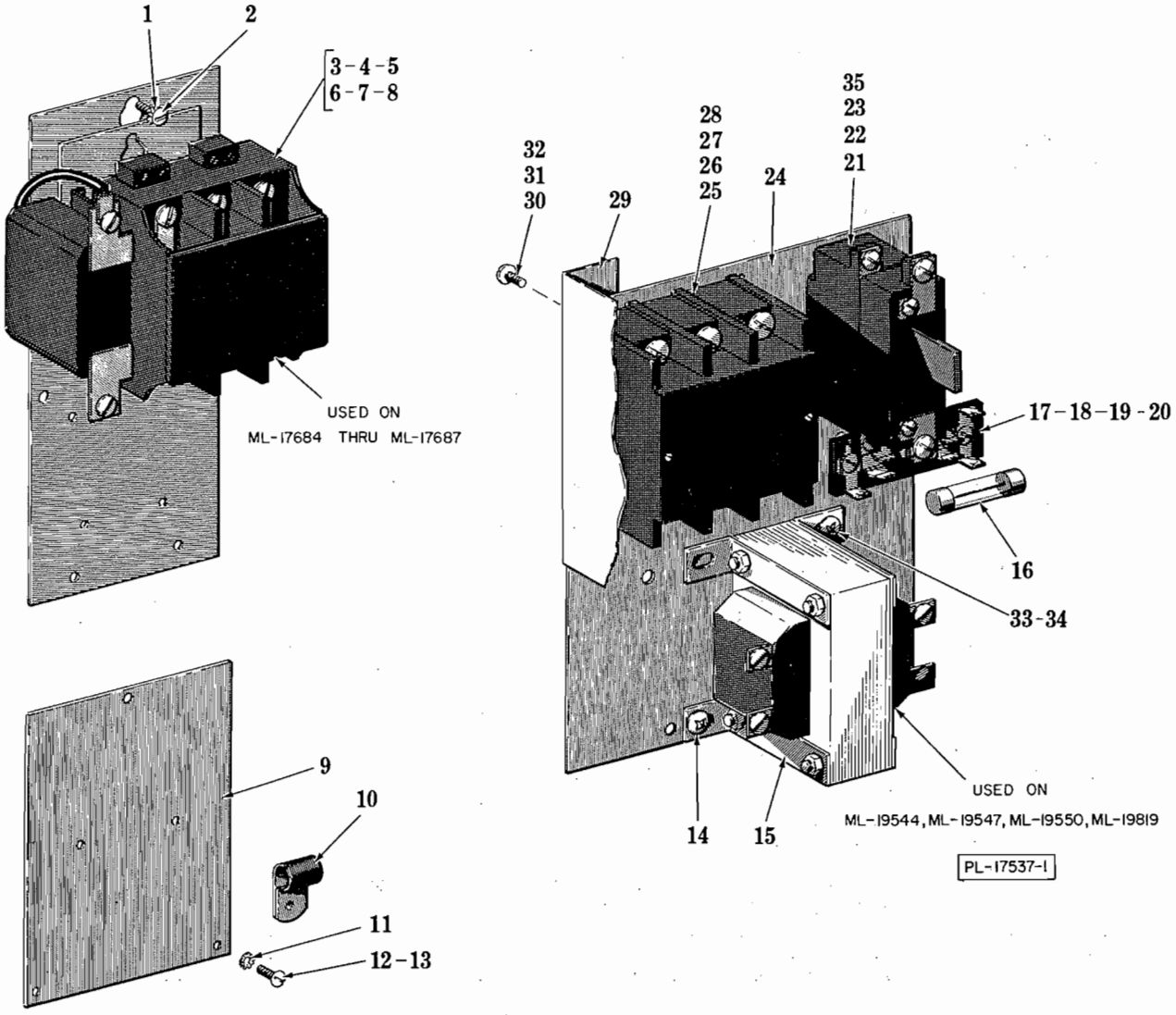

MAGNETIC CONTROL UNIT

MAGNETIC CONTROL UNIT

ILLUS. PL-17537-1	PART NO.	NAME OF PART	AMT.
1	WL-7-6	Lock Washer - #8 Ext. Shakeproof	3
2	SC-7-37	Mach. Screw - #8-32 x 1/4" Rd. Hd	3
3	D-87712-38-2	Starter - Magnetic (Less Elements) (115 V., 50/60 Hz., 1 Ph.)	1
4	D-87712-38-1	Starter - Magnetic (Less Elements) (220/230 V., 60 Hz.; 220 V., 50 Hz.) (1 Ph.)	1
5	D-87712-40-1	Starter - Magnetic (Less Elements) (460 V., 60 Hz.; 380 V., 50 Hz.) (3 Ph.)	1
6	D-87712-39-1	Starter - Magnetic (Less Elements) (200/230 V., 60 Hz.; 220 V., 50 Hz.) (3 Ph.)	1
7	P-72717	Plate - Mounting (Use with D-87712-39-1)	1
8	*	Heater Elements - Magnetic Starter	AR
9	P-70147	Plate - Capacitor Mounting (manual Starter)	1
10	M-78752-4	Clip - Wiring	1
11	WL-7-6	Lock Washer - #8 Ext. Shakrproof	3
12	SC-7-37	Mach. Screw - #8-32 x 1/4" Rd. Hd	2
13	SC-7-41	Mach. Screw - #8-32 x 3/8" Rd. Hd	1
14	SD-15-20	Self-Tapping Screw - #10-32 x 3/8" Phil. Pan Hd. "Taptite" (Above 250 V.) (3 Ph.)	1
15	B-101935	Transformer (Above 250 V.) (3 Ph.)	1
16	FE-9-25	Fuse (1/2 Amp.) (Above 250 V.) (3 Ph.)	1
17	B-124017	Fuse Block Assy. (Above 250 V.) (3 Ph.)	1
18	M-85432	Insulator - Fuse Block (Above 250 V.) (3 Ph.)	1
19	SC-9-49	Mach. Screw - #6-32 x 3/8" Rd. Hd	1
20	NS-9-7	Mach. Nut - #6-32 Hex	1
21	B-88196-6-1	Relay - Thermal Overload (1 Ph.)	1
22	B-88196-5-1	Relay - Thermal Overload (3 Ph.) (Tri-Block)	1
23	*	Heater Element - Overload Relay	AR
24	D-123962	Panel - Control	1
25	C-87713-23-2	Contactor (115 V., 50/60 Hz., 1 Ph.)	1
26	C-87713-23-1	Contactor (200/230 V., 60 Hz.; 220 V., 50 Hz.) (1 Ph.)	1
27	C-87713-22-1	Contactor (200/230 V., 60 Hz.; 220 V., 50 Hz.) (3 Ph.)	1
28	C-87713-22-2	Contactor (460 V., 60 Hz.; 380/415 V., 50 Hz.) (3 Ph.)	1
29	D-290551	Insulator	1
30	WL-7-2	Lock Washer - #6 Ext. Shakeproof	4
31	NS-9-7	Mach. Nut - #6-32 Hex	4
32	SC-9-49	Mach. Screw - #6-32 x 3/8" Rd. Hd	4
33	SC-7-37	Mach. Screw - #8-32 x 1/4" Rd. Hd	3
34	WL-7-6	Lock Washer - #8 Ext. Shakeproof	3
35	B-123131	Self-Tapping Screw - #8-32 x 3/8" Truss Hd., "Taptite"	2

*Give Elec. Spec., Mach. Model & Motor Type.

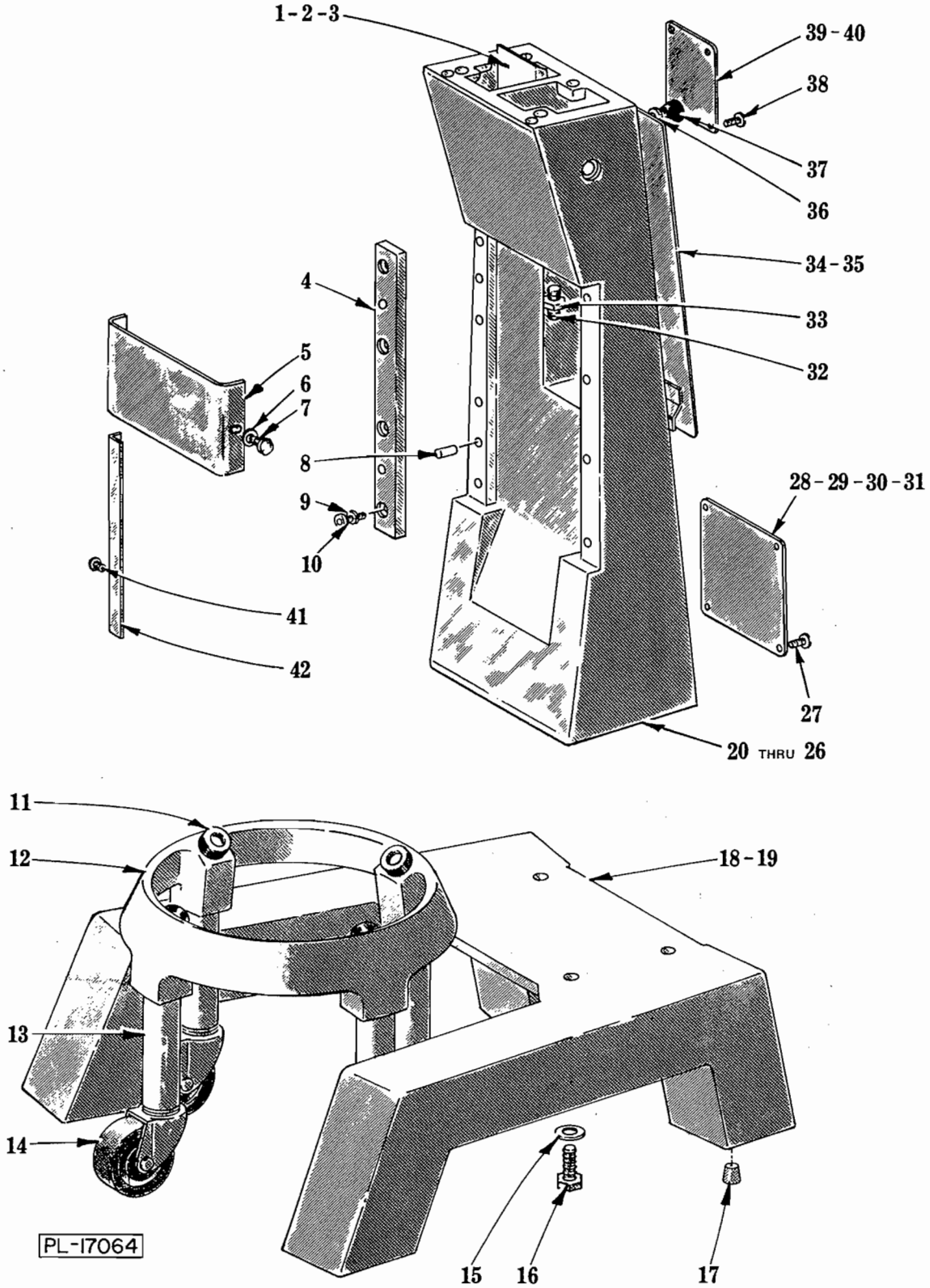

BASE AND PEDESTAL

BASE AND PEDESTAL

ILLUS. PL-17064	PART NO.	NAME OF PART	AMT.
1	R-70145	Air Baffle Assy	1
*2	SC-13-55	Mach. Screw - #10-24 x 1" Flat Hd	1
**3	SC-16-4	Mach. Screw - #10-24 x 1" Oval Hd	1
4	R-68717	Slideway	2
5	R-68720	Apron	1
6	WS-23-21	Washer	2
7	P-70641-12	Thumb Screw - Special	2
8	D-11800-116	Dowel	2
9	A-120288	Lock Washer - Special	8
10	SC-40-14	Cap Screw - 5/16"-18 x 3/4" Soc. Fil. Hd	8
11	B-18682-1	Bumper	4
12	S-70593-2	Bowl Truck Assy. (Incls. items #11, 13 & 14)	1
13	P-70590-1	Leg	4
14	P-87668-1	Caster	4
15	WS-18-19	Washer	4
16	SC-62-22	Cap Screw - 3/8"-16 x 1-1/4" Hex Hd	4
17	B-114992	Plug - Base (Plug for Foot Pad)	AR
*18	E-110146-2	Base Assy	1
**19	E-110155	Base Assy	1
*20	E-121582-1	Pedestal (ML-17684 & ML-17685 Only)	1
**21	E-121582-4	Pedestal (ML-17686 & ML-17687 Only)	1
*22	E-123961-4	Pedestal (ML-19544 & ML-19547 Only)	1
**23	E-123961-2	Pedestal (ML-19550 & ML-19819 Only)	1
*24	C-87532-88	Lead Wire Assy. (Grd.)	1
25	SD-24-1	Self-Tapping Screw - #10-24 x 3/8" Pan Hd. "Taptite"	1
26	WL-10-6	Lock Washer - #10 Ext. Shakeproof	1
27	B-123109	Screw - Special	4
*28	P-70004-1	Cover - Capacitor & Starter Access (ML-17684 & ML-17685 Only)	1
**29	P-70004-2	Cover - Capacitor & Starter Access (ML-17686 & ML-17687 Only)	1
*30	C-123969-1	Cover - Capacitor & Starter Access (ML-19544 & ML-19547 Only)	1
**31	C-123969-2	Cover - Capacitor & Starter Access (ML-19550 & ML-19819 Only)	1
32	SC-47-46	Set Screw - 3/8"-16 x 1-1/4" Soc. Hdls., Half-Dog Pt	1
33	NS-17-15	Jam Nut - 3/8"-16 Hex Fin	1
*34	R-70144-1	Lift Access Cover Assy	1
**35	R-70144-3	Lift Access Cover Assy	1
36	WS-19-26	Washer	1
37	M-70450	Knob - Lift Access Cover	1
38	B-121676-3	Screw - Special	4
*39	C-117872-1	Plate - Mach. Data (Give Serial No. & Elec. Spec.) (60 Hz.)	1
**40	C-117872-3	Plate - Mach. Data (Give Serial No. & Elec. Spec.) (50 Hz.)	1
**41	P-70641-12	Thumb Screw - Special	4
**42	P-70403	Cover - Slideways	2

*D-300 & D-300-T.
**D-300-D & D-300-DT.

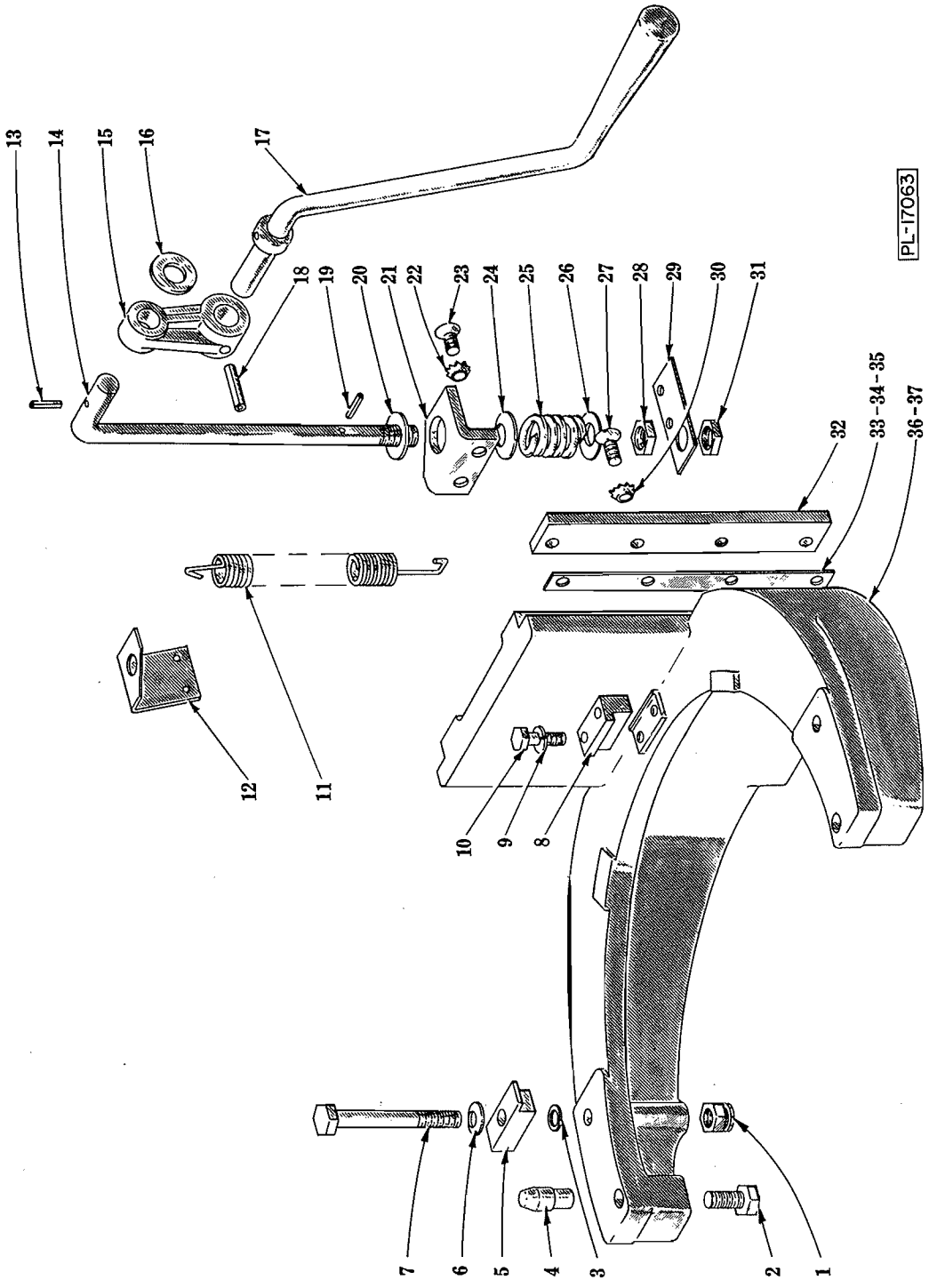

BOWL LIFT UNIT

BOWL LIFT UNIT

ILLUS. PL-17063	PART NO.	NAME OF PART	AMT.
1	NS-32-13	Stop Nut - 5/16"-18 "Flexloc"	2
2	SC-37-75	Cap Screw - 5/16"-18 x 3/4" Hex Hd	2
3	WS-4-18	Washer	2
4	M-70411	Pin - Bowl Locating	2
5	M-70057	Clamp - Bowl	2
6	M-70087	Washer - Spring	2
7	SC-62-28	Cap Screw - 5/16"-18 x 3-1/2" Hex Hd	2
8	M-70044	Retainer - Bowl	1
9	WL-6-16	Lock Washer - 1/4" Light	2
10	SC-36-9	Cap Screw - 1/4"-20 x 1-1/4" Hex Hd	2
11	M-23884	Spring - Counterbalance	2
12	P-70056	Bracket - Upper Spring Lift	1
13	RP-2-25	Rollpin - 1/8" Dia. x 7/8" Lg	1
14	P-68718	Rod - Bowl Lift	1
15	P-69995	Arm - Bowl Lift	1
16	WS-8-47	Washer	1
17	R-70493	Lift Handle Assy	1
18	RP-2-26	Rollpin - 1/4" Dia. x 1-1/8" Lg	1
19	RP-2-10	Rollpin - 3/16" Dia. x 1" Lg	1
20	WS-8-47	Washer	1
21	P-69998	Bracket - Bowl Lift	1
22	WL-9-14	Lock Washer - 5/16" Csk. Ext. Shakeproof	2
23	SC-61-3	Cap Screw - 5/16"-18 x 3/4" Soc. Flat Hd	2
24	M-70131	Washer - Cup	1
25	M-70104	Spring - Bowl Lift	1
26	WS-8-47	Washer	1
27	SC-61-3	Cap Screw - 5/16"-18 x 3/4" Soc. Flat Hd	8
28	NS-17-31	Jam Nut - 1/2"-20 Hex Fin	1
29	M-70058	Bracket - Lower Spring Lift	1
30	WL-9-14	Lock Washer - 5/16" Csk. Ext. Shakeproof	8
31	NS-17-31	Jam Nut - 1/2"-20 Hex Fin	1
32	P-69996	Gib	2
33	P-70092-1	Shim - Bowl Support (.001" Thk.)	AR
34	P-70092-2	Shim - Bowl Support (.002" Thk.)	AR
35	P-70092-3	Shim - Bowl Support (.003" Thk.)	AR
*36	T-69987-2	Support - Bowl	1
**37	T-70404-3	Support - Bowl	1

*D-300 & D-300-T.
**D-300-D & D-300-DT.

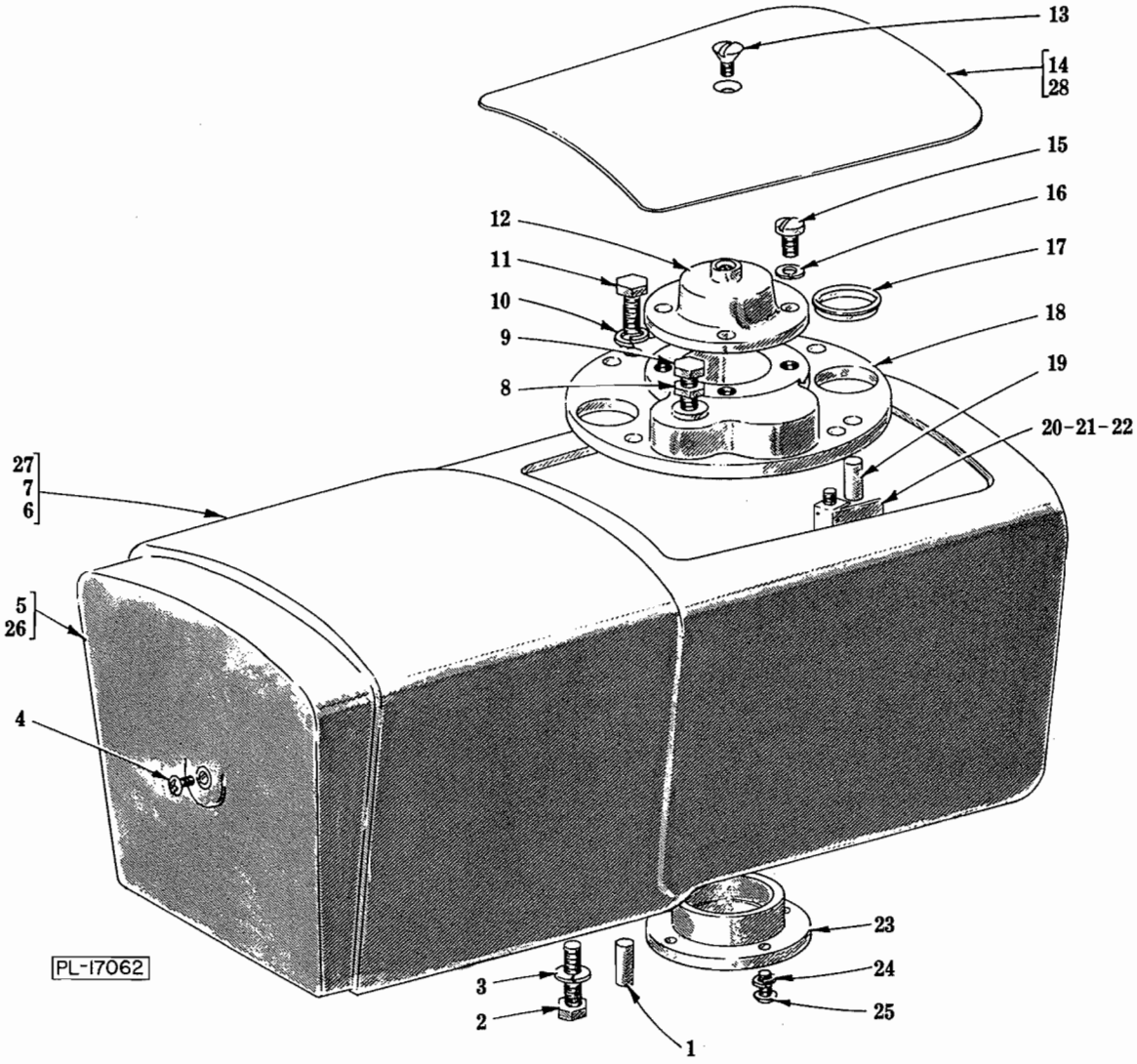

TRANSMISSION CASE

TRANSMISSION CASE

ILLUS. PL-17062	PART NO.	NAME OF PART	AMT.
1	D-11800-221	Dowel	2
2	SC-62-27	Cap Screw - 3/8"-16 x 1-3/4" Hex Hd	4
3	WL-4-2	Lock Washer - 3/8" Light	4
4	M-72189	Mach. Screw - "Nylok" Phil Truss Hd	1
*5	S-68723-1	Cap - Trim	1
*6	D-290505-1	Case - Transmission	1
7	———	Motor (See Page 19)	1
8	NS-17-14	Jam Nut - 3/8"-16 Hex Fin	1
9	SC-36-57	Cap Screw - 3/8"-16 x 1-1/4" Hex Hd	1
10	WL-3-43	Lock Washer - 5/16" Light	4
11	SC-36-26	Cap Screw - 5/16"-18 x 7/8" Hex Hd	4
12	P-70017	Retainer - Bearing	1
13	SC-15-36	Mach. Screw - #10-24 x 5/8" Oval Hd	1
*14	R-70005-1	Transmission Case Cover Assy	1
15	SC-11-74	Mach. Screw - 1/4"20 x 5/8" Fil. Hd	4
16	WL-3-37	Lock Washer - 1/4" Medium	4
17	M-64871	Plug - Single Friction	2
18	S-68721	Bearing Carrier - Transmission Case	1
19	D-11800-116	Dowel	2
20	P-70872	Deflector - Roller Clutch Oil	1
21	SC-7-40	Mach. Screw - #8-32 x 5/16" Rd. Hd	1
22	WL-7-6	Lock Washer - #8 Ext. Shakeproof	2
**23	P-70048	Liner - Aluminum Case	1
**24	WL-3-36	Lock Washer - 1/4" Light	4
**25	SC-76-1	Cap Screw - 1/4"-20 x 1/2" Soc. Button Hd	4
**26	S-68723-3	Cap - Trim	1
**27	D-290505-2	Case - Transmission	1
**28	R-70005-2	Transmission Case Cover Assy	1
	M-79621	Shim (Between Trans. Case & Ped.) (Not Shown)	AR

*D-300 & D-300-T.
**D-300-D & D-300-DT.

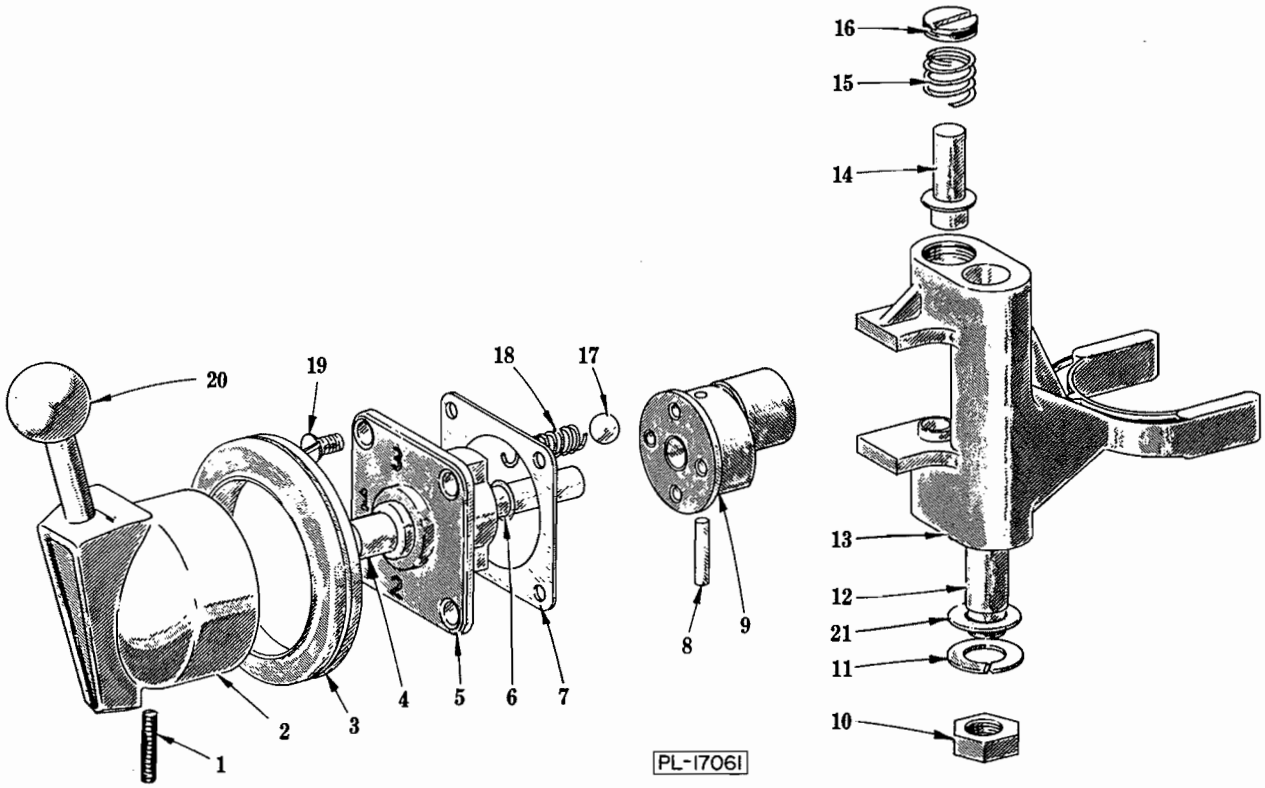

SHIFTER UNIT

SHIFTER UNIT

ILLUS. PL-17061	PART NO.	NAME OF PART	AMT.
1	SC-47-17	Set Screw - 1/4"-20 x 3/4" Soc. Hd., Cup Pt	1
2	P-70333-2	Shifter Handle Assy. (Incls. items #1 & 20)	1
3	B-110961	Grommet - Shifter Handle	1
4	B-114507	Shaft - Shifter	1
5	P-290115-2	Plate - Index	1
6	D-67500-44	"O" Ring	1
7	M-23946	Gasket - Index Plate	1
8	PS-3-8	Spirol Pin - 1/8" Dia. x 3/4" Lg	1
9	B-114506	Cam - Gear Shifter	1
10	NS-13-22	Full Nut - 3/8"-16 Hex Fin	1
11	WL-4-2	Lock Washer - 3/8" Light	1
12	M-70043	Rod - Shifter Guide	1
13	P-13160	Yoke - Shifter	1
14	V-12733	Plunger - Shifter Yoke	2
15	V-12734	Spring - Shifter Yoke	2
16	V-12732	Retainer - Shifter Yoke Spring	2
17	BA-2-9	Ball - 1/4" Dia	2
18	V-111170	Spring - Detent	2
19	SC-13-46	Mach. Screw - #10-24 x 1/2" Flat Hd	4
20	M-70085	Knob - Shifter Handle Ball	1
*21	WS-6-36	Washer	1

*D-300-D & D-300-DT.

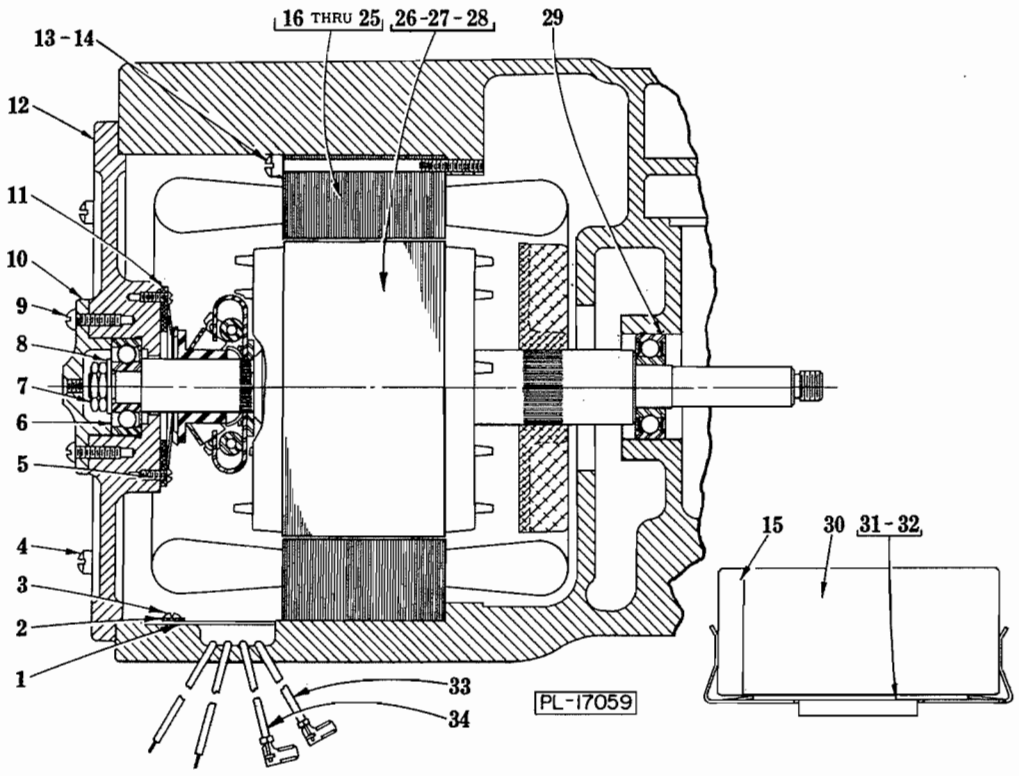
16 THRU 25
26-27-28
29
13-14
12
11
10
9
8
7
6
5
4
3
2
1
33
34
15
30
31-32
PL-17059

MOTOR UNIT

MOTOR UNIT

ILLUS. PL-17059	PART NO.	NAME OF PART	AMT.
1	M-70441	Retainer - Lead Wire	1
2	WL-7-7	Lock Washer - #8 Ext. Shakeproof	1
3	SC-9-56	Mach. Screw - #8-32 x 3/8" Rd. Hd	1
4	SC-11-64	Mach. Screw - #12-24 x 1" Fil. Hd	4
*5	SC-9-70	Mach. Screw - #6-32 x 1/4" Rd. Hd	2
6	BB-17-5	Ball Bearing - N.D. #7601	1
7	V-11430	Nut - Special	2
8	WS-7-9	Washer	1
9	SC-9-61	Mach. Screw - #8-32 x 1/2" Rd. Hd	4
10	P-70012	Cap - Bearing	1
*11	P-66085	Switch - Starting (Stationary Part)	1
12	S-68722	Bracket - Bearing	1
*13	SC-11-32	Mach. Screw - #10-24 x 3" Fil. Hd	4
**14	SC-11-28	Mach. Screw - #10-24 x 2-1/2" Fil. Hd	4
*15	C-70486-2	Cap - Capacitor End	1
*16	P-65477-64-1	Stator Assy. (115 V., 60 Hz.)	1
*17	P-65477-64-2	Stator Assy. (200 V., 60 Hz.)	1
*18	P-65477-64-3	Stator Assy. (230 V., 60 Hz.)	1
*19	P-65477-64-4	Stator Assy. (115 V., 50 Hz.)	1
*20	P-65477-64-5	Stator Assy. (220 V., 50 Hz.)	1
**21	P-65478-29-1	Stator Assy. (200 V., 60 Hz.)	1
**22	P-65478-29-2	Stator Assy. (230 V., 60 Hz.)	1
**23	P-65478-29-3	Stator Assy. (460 V., 60 Hz.)	1
**24	P-65478-29-4	Stator Assy. (220 V., 50 Hz.)	1
**25	P-65478-29-5	Stator Assy. (380 V., 50 Hz.)	1
*26	P-22275-104	Rotor Assy. (60 Hz.)	1
*27	P-22275-105	Rotor Assy. (50 Hz.)	1
**28	P-15747-219	Rotor Assy. (50/60 Hz.)	1
29	BB-18-17	Ball Bearing - Fafnir #H203PP	1
*30	D-70487-1	Capacitor	1
*31	P-66621-1	Bracket - Capacitor	1
*32	SC-14-45	Mach. Screw - #8-32 x 3/8" Flat Hd	2
*33	C-87525-235	Lead (Cap to Start Switch) (40")	1
*34	C-87525-236	Lead (Cap to Start Switch) (47")	1

*1 Ph.
**3 Ph.

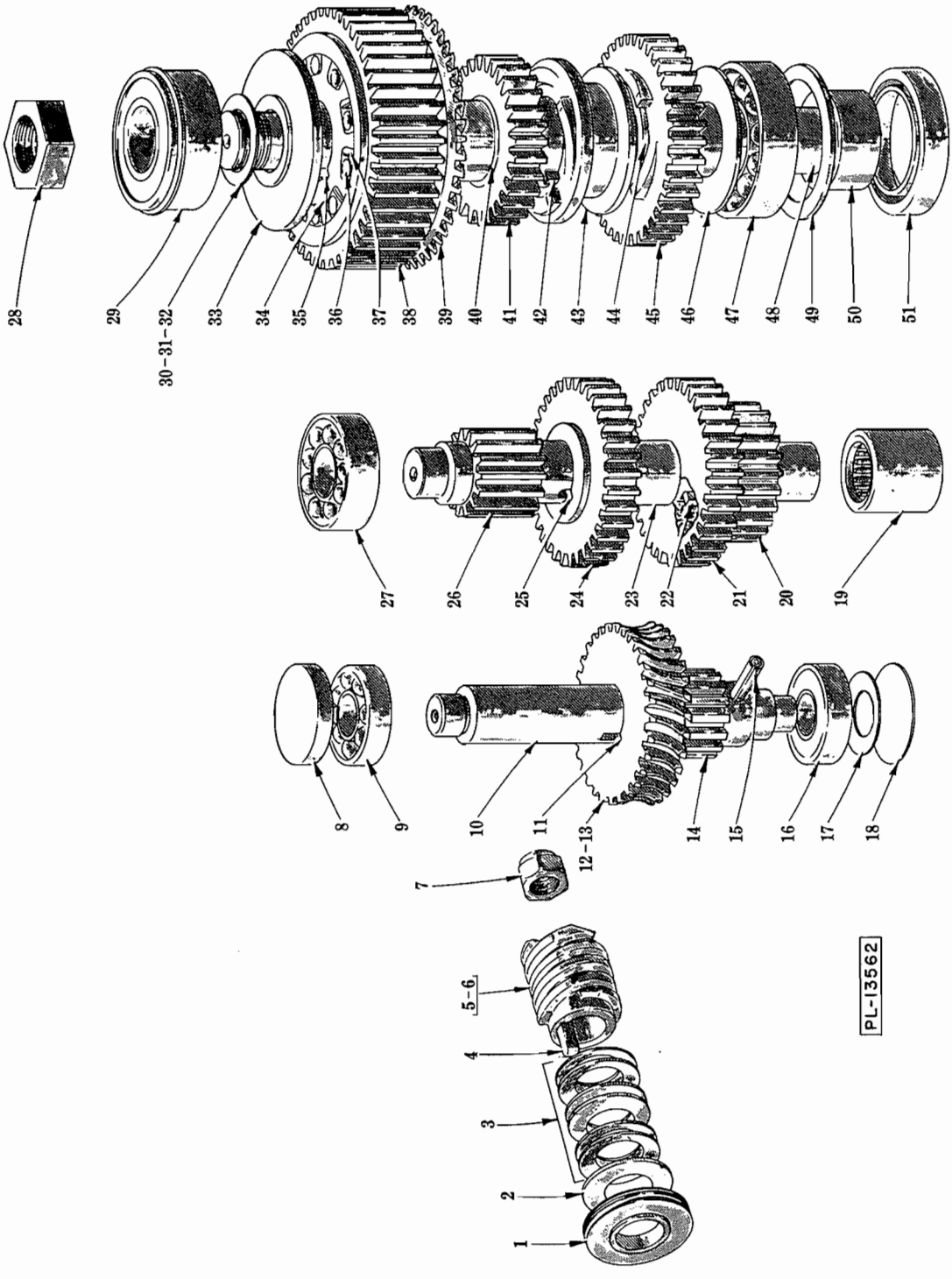

TRANSMISSION

TRANSMISSION

ILLUS. PL-13562	PART NO.	NAME OF PART	AMT.
1	M-13174-1	Deflector - Grease	1
2	WS-10-36	Washer	1
3	M-77840	Washer - Belleville	6
4	V-12747	Key	1
5	M-70406	Worm (5T) (60 Hz.)	1
6	M-70407	Worm (5T) (50 Hz.)	1
7	NS-32-23	Stop Nut - 7/16"-20 "Flexloc"	1
8	M-70026	Pusher - Bearing	1
9	BB-17-4	Ball Bearing - ND #7501	1
10	P-70036	Shaft - Worm Gear	1
11	R-12430-52	Key	1
12	P-70034	Gear - Worm (29T) (60 Hz.)	1
13	P-70251	Gear - Worm (24T) (50 Hz.)	1
14	C-70027	Gear - Worm Shaft (14T)	1
15	PS-4-13	Spirol Pin - 1/4" Dia. x 7/8" Lg	1
16	BB-17-4	Ball Bearing - ND #7501	1
17	M-70166	Spring - Worm Shaft	1
18	PL-3-14	Plug - Expansion	1
19	BN-2-2	Needle Bearing	1
20	M-70028	Gear (23T)	1
21	C-70030	Gear (33T)	1
22	M-70260	Key	1
23	M-89829	Spacer	1
24	M-89831	Gear (32T)	1
25	M-89830	Key	1
26	P-89818	Shaft - Transmission	1
27	BB-17-9	Ball Bearing - ND #3203	1
28	NS-32-32	Stop Nut - 3/4"-16 L.H. Thd. "Flexloc"	1
29	BB-9-41	Ball Bearing - ND #45504	1
30	WS-12-45	Washer (.002" Thk.)	AR
31	WS-12-46	Washer (.003" Thk.)	AR
32	WS-12-47	Washer (.010" Thk.)	AR
33	M-70015	Spacer - Upper Planetary Shaft	1
34	P-70033	Sleeve - Drive	1
35	R-12430-161	Key	1
36	M-70039	Roller - Clutch	10
37	M-70055	Spring - Roller	10
38	P-70032	Gear - Roller Clutch (46T)	1
39	P-70020	Gear - Bevel (46T)	1
40	M-70042	Bushing - Upper Clutch Gear	1
41	P-70040	Gear - Upper Clutch (29T)	1
42	R-12430-55	Key	2
43	C-70035-1	Sleeve - Clutch	1
44	M-70031	Bushing - Lower Clutch Gear	1
45	P-70095	Gear - Lower Clutch (38T)	1
46	M-70046	Spacer - Lower Planetary Shaft	1
47	BB-8-33	Ball Bearing - Fafnir #205WD	1
48	M-71187	Planetary Shaft & Bushing Assy. (Incls. item #44)	1
49	M-75050	Washer - Spacing	1
50	M-70016	Spacer - Planetary	1
51	B-110334	Seal - Planetary	1
	P-88774	Planetary Shaft & Gear Assy. (Incls. items #33, 34, 35, 38 thru 43, 45, 46, 47, 48 & 50)	1

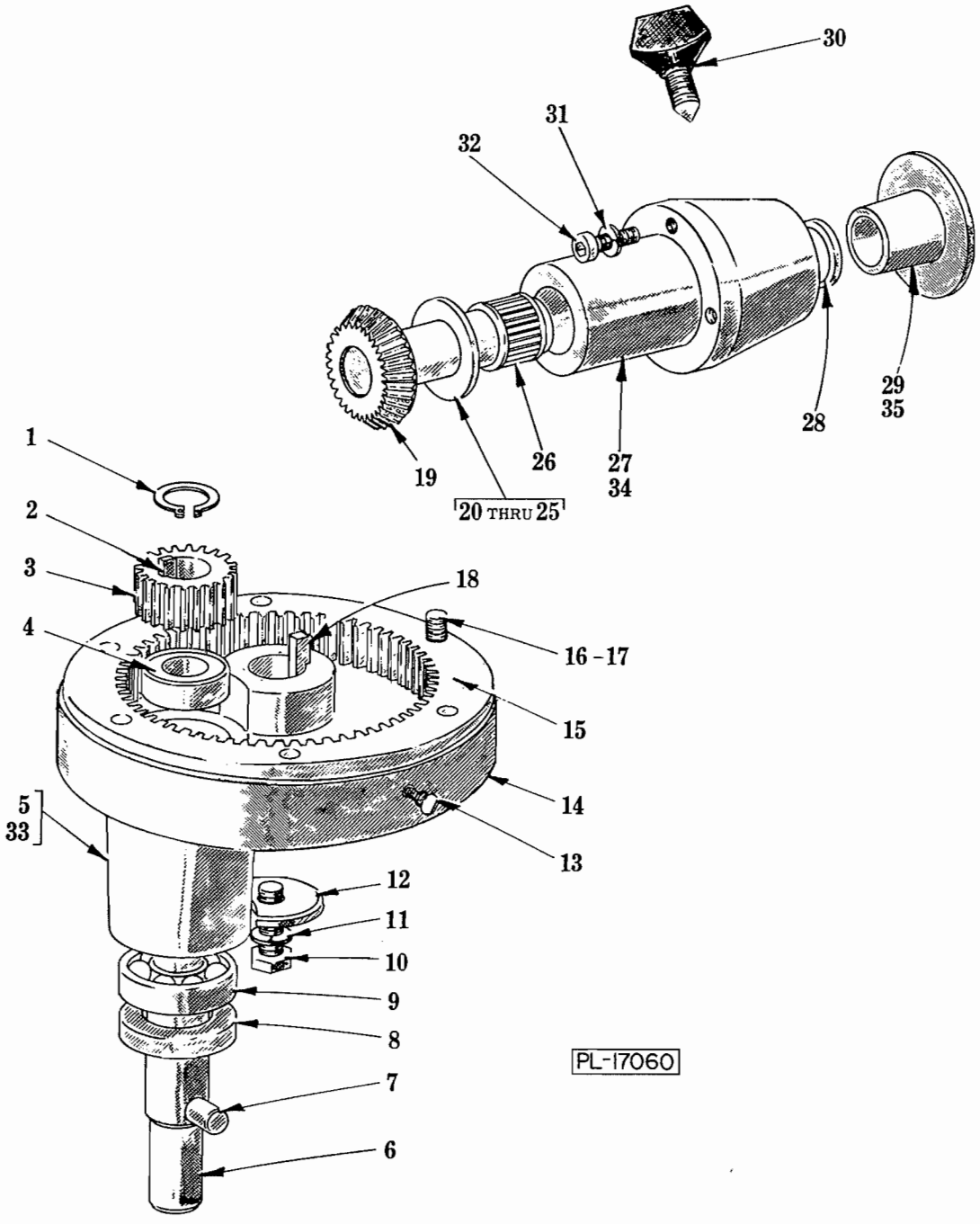

PLANETARY AND ATTACHMENT HUB

PLANETARY AND ATTACHMENT HUB

ILLUS. PL-17060	PART NO.	NAME OF PART	AMT.
1	RR-4-6	Retaining Ring	1
2	R-12430-142	Key	1
3	M-70014	Pinion - Agitator Shaft (18T)	1
4	BB-20-6	Ball Bearing - ND #7504	1
*5	S-69990-1	Planetary	1
6	M-70339	Agitator Shaft Assy. (Incls.item #7)	1
7	M-70019	Pin - Agitator	1
8	B-110335	Seal - Agitator Shaft	1
9	BB-17-36	Ball Bearing - ND #7505	1
10	SC-62-58	Cap Screw - 3/8"-24 x 1-1/4" Hex Hd	1
11	WL-6-27	Lock Washer - 3/8" Light	1
12	M-70047-1	Washer - Planetary	1
13	P-70641-12	Thumb Screw - Special	2
14	R-68719	Cup - Planetary Drip	1
15	S-69994	Gear - Internal (59T)	1
16	SC-40-16	Cap Screw - 5/16"-18 x 1" Soc. Fil. Hd	6
17	WL-3-48	Lock Washer - 5/16" High Collar	6
18	R-12430-158	Key	1
19	M-75393	Attach. Drive Gear (35T) & Expan. Plug Assy	1
20	M-70045-1	Washer - Thrust (.125" Thk.)	AR
21	M-70045-2	Washer - Thrust (.119" Thk.)	AR
22	M-70045-3	Washer - Thrust (.121" Thk.)	AR
23	M-70045-4	Washer - Thrust (.123" Thk.)	AR
24	M-70045-5	Washer - Thrust (.127" Thk.)	AR
25	M-70045-6	Washer - Thrust (.129" Thk.)	AR
26	BN-2-12	Bearing - Needle	2
*27	P-70511-3	Attachment Hub & Bearings Assy. (Incls. item #26)	1
28	P-70090	Seal - Attachment Hub	1
*29	C-114824-3	Plug - Attachment Hub	1
30	C-108197-1	Thumb Screw Assy	1
31	WL-3-43	Lock Washer - 5/16" Light	3
32	SC-40-15	Cap Screw - 5/16"-18 x 1-1/4" Soc. Fil. Hd	3
**33	S-69990-2	Planetary	1
**34	P-70511-2	Attachment Hub & Bearing Assy. (Incls. item #26)	1
**35	C-114824-5	Plug - Attachment Hub	1
	*M-88730-1	Planetary Assy. (Incls. items #1 thru 6, 8 & 9)	1
	**M-88730-2	Planetary Assy. (Incls. items #1, 2, 3, 4, 6, 8, 9 & 33)	1

*D-300 & D-300-T.
**D-300-D & D-300-DT.

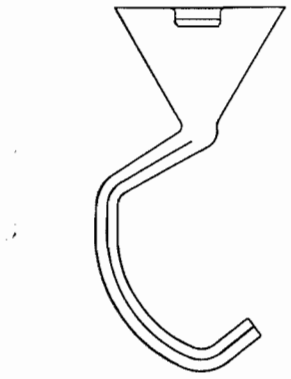

1

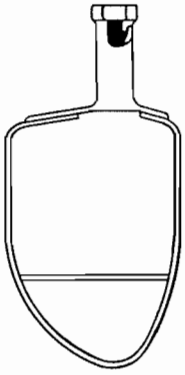

2

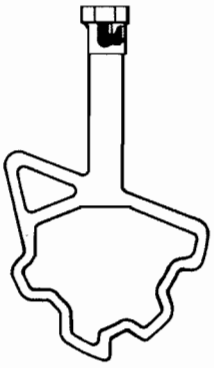

3-4

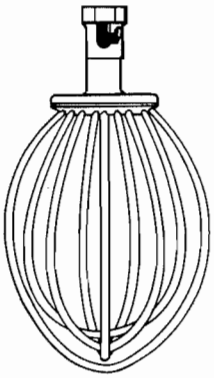

5

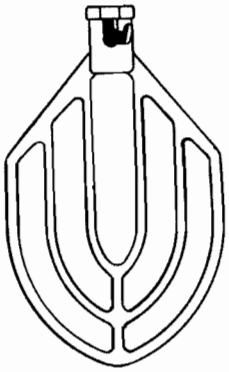

6-7

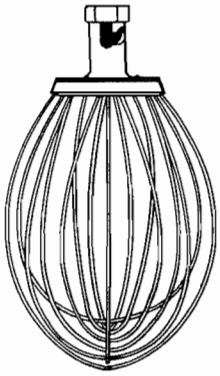

8-9

PL-17023

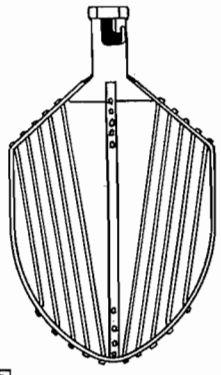

10

AGITATORS

ILLUS. PL-17023	PART NO.	PART NO.	NAME OF PART	AMT.
	30 Qt.	20 Qt.		
1	---	S-23500	"E" Dough Arm	1
2	S-68093	R-70764	"P" Pastry Knife	1
3	R-10582-1	---	"S" Sweet Dough (Standard)	1
4	R-10582-2	---	"S" Sweet Dough (Deluxe)	1
5	R-11016	---	"I" Wire Whip (Deluxe)	1
6	S-23641-1	S-23642-1	"B" Flat Beater (Standard)	1
7	S-23641-2	S-23642-2	"B" Flat Beater (Deluxe)	1
8	S-23525-1	S-23526-1	"D" Wire Whip (Standard)	1
9	S-23525-2	S-23526-2	"D" Wire Whip (Deluxe)	1
10	D-123717	D-123724	"C" Wing Whip	1
	E-119679	---	"ED" Dough Arm - Spiral (Not Shown)	1