INSTRUCTION MANUAL

. . . *with Catalog of Replacement Parts*

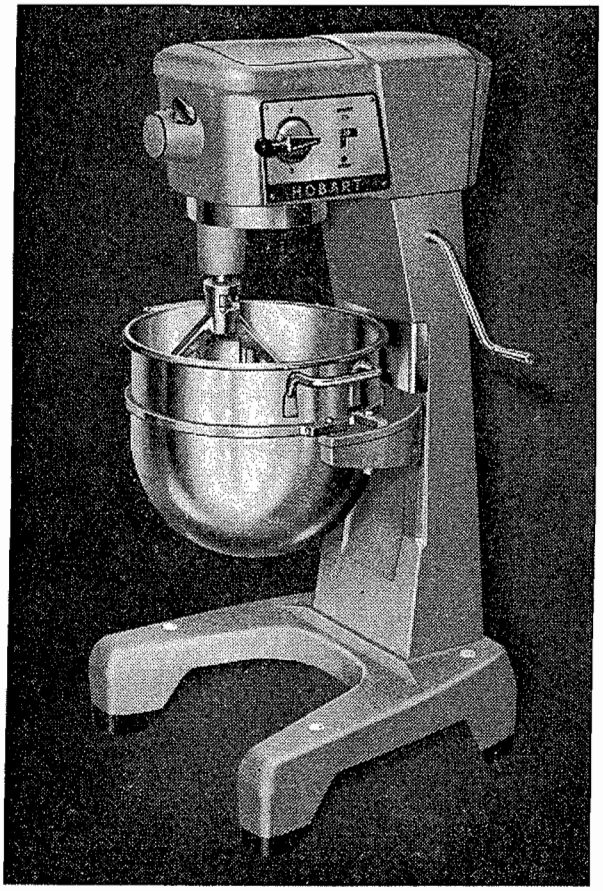

HOBART

MODELS D-300 & D-300-T MIXERS

ML-16127 D-300 (W & W/O Overload Protection)

ML-16129 D-300-T (Timed)

HOBART

The World's Oldest and Largest Manufacturer of Computing Scales and Food Store, Kitchen, Bakery and Dishwashing Machines

THE HOBART MANUFACTURING COMPANY TROY, OHIO

FORM 6868C (Revised June 1969) (Supersedes Form 6868B, Oct. 1968)

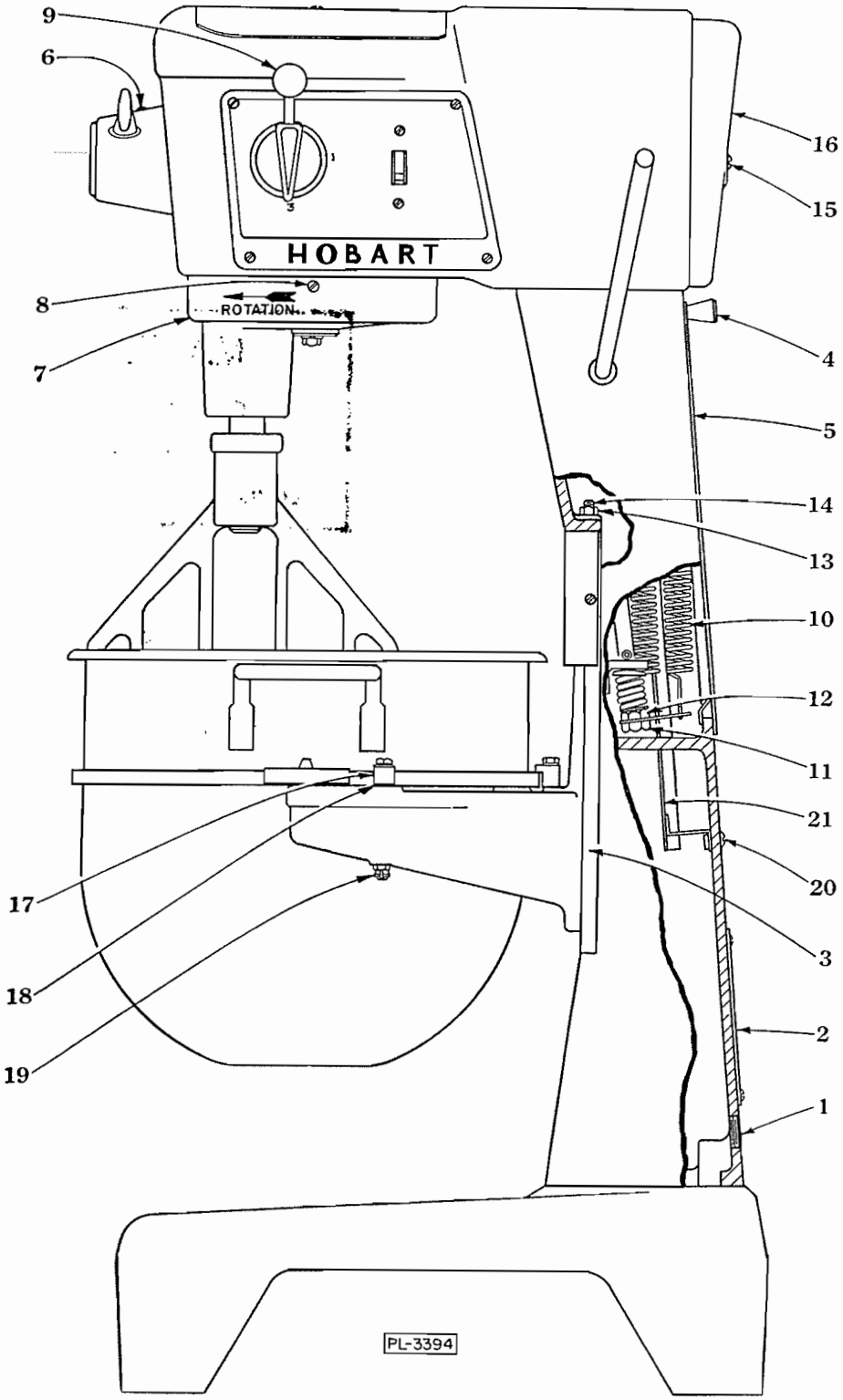
9
6
16
15
HOBART
8
ROTATION
7
4
5
14
13
10
12
11
21
20
17
3
18
2
19
1
PL-3394

FIG. 1

Instructions for Operation and Care of MODELS D-300 & D-300T MIXERS

INSTALLATION

ELECTRICAL CONNECTIONS (Fig. 1):

The L.H. rear of the pedestal is tapped for a 3/4" conduit connection (1). On machines without controllers, leads (either for one or three phase machines) are provided at the bottom of the pedestal to make direct connections with the power supply lines. These leads may be reached by removing the lower access panel (2) on the back of the pedestal. On machines equipped with controllers the line leads should be connected directly to the controller which is mounted in the lower pedestal behind the lower access panel (2). A wiring diagram for the mixer is attached to the back side of the lower access panel. The electrical specifications of the motor, stamped on the name plate on the back of the pedestal, MUST agree with those of the power supply. Three phase machines must be connected so that the planetary runs in the direction of the arrow in Fig. 1.

Electrical connections should be made by qualified workmen who will observe all applicable Safety Codes and the National Electrical Code.

D-300

To start the motor, either turn on the switch or press the start button (depending on the equipment). The shifter handle should be at one of the numbers indicating a speed, not at an intermediate position.

D-300T

To start the motor, for non-timed operation, set the timer on HOLD and turn on the switch. For timed operation set the timer for the desired time and then turn on the switch. The shifter handle should be at one of the numbers indicating a speed, not at an intermediate position.

LUBRICATION (Fig. 1):

The motor has grease packed ball bearings, so will require little attention. The transmission gearing is packed with a special grease that will last for several years. When grease is needed for replacement, it should be ordered from us. Lubricate the bowl slideways (3) occasionally, by applying a very small amount of oil with the tip of your finger. Only mineral oils are suitable for this type of lubrication. Occasionally lubricate the bowl lift. To do this, unscrew the cover knob (4) (retained in cover by fiber washer) at rear of pedestal, remove the lift access cover (5) and lightly lubricate the moving parts. A small oiler (6) is for lubricating attachments. The polished drip cup (7) is a safe-guard to prevent any lubricant that might work out of the planetary gearing from dropping into the bowl. Take off the drip cup (by removing the two screws (8)) once a month and wipe it clean.

OPERATION

1. **ELECTRICAL SYSTEM:**
   The D-300 is equipped with either a tumbler switch (overload or non-overload) or a magnetic starter with push button controls depending on the type ordered. A timer is also available on order.

2. **SPEED SELECTION (Fig. 1):**
   Speed selection is made by aligning the pointer of the shifter handle (9) with the proper number on the name plate. Stop the mixer before making ANY speed changes.

3. **BOWL LIFT:**
   This mixer is equipped with a "feather-touch" hand lever type bowl lift. It is spring counterbalanced and locks automatically at the top or bottom of its travel. Push the lever down to raise the bowl.

4. **BOWLS:**
   The standard bowl for this mixer has a capacity of 30 quarts. 20 quart bowl and agitators are also available.

5. **AGITATORS:**
   When assembling an agitator the bowl must be in the down position. Slip the agitator up on the shaft and turn it around until the driving pin in the shaft reaches the L-shaped slot in the agitator shank. Agitators of various styles are available, each suited to a particular job. Have your representative show them to you.

6. **ATTACHMENTS:**
   Various attachments and accessories are available for this machine, such as; Dicer, Vegetable Slicer and Shredder, Food Chopper, Soup Strainer and Colander, Juice Extractor, Coffee Mill, Tool Sharpener, Oil Dropper, Tray Support, Bowl Jacket, Bowl Truck, Bowl Splash Cover and Bowl Extension Ring.

   The attachment socket is for size 12 attachments. Three attachment speeds are available, relative to the settings of the shifter handle. Chopper attachment should be operated in 3rd speed.

7. **OVERLOAD RELEASE:**
   When an overload condition occurs (commonly due to excessive bowl load or insufficient power delivery) on mixers with overload protection, correct the cause of overload. Wait a minute for the thermal element to cool and re-start the mixer.

SERVICE INSTRUCTIONS

AGITATOR SHAFT BEARINGS:

These bearings are grease packed and will require little attention. Service men may remove these bearings should greasing become necessary.

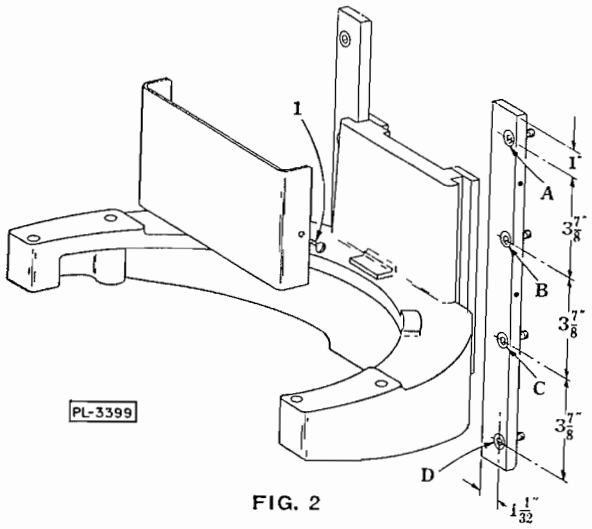

FIG. 2

BOWL SUPPORT (Fig. 2):

A. REMOVAL:

To remove the bowl support it is necessary to take off the right hand slideway and loosen the left hand slideway. Use the following method:

(1) Remove the apron. It is held by two screws (1).

(2) Break the paint covering the socket heads of eight retaining screws. Locate by dimensions given.

(3) Lower the bowl support to its bottom position.

(4) Unscrew the cover knob (4, Fig. 1) at the rear of the pedestal and remove the lift access cover. Unhook the two counterbalance springs (10, Fig. 1) from the lower spring bracket.

(5) Remove the lower jam nut (11, Fig. 1), then the lower spring lift bracket. Next, remove the remaining jam nut (12). The flat washer, bowl lift spring and cupped washer will then slide free from the bowl lift rod. Bowl lift locking tension may be adjusted by tightening or loosening the upper jam nut (12, Fig. 1).

(6) Pull the lift handle down, clearing the bowl lift rod from the bracket of the bowl support. Be careful not to lose the flat washer on top of the bracket.

(7) Remove the right slideway and loosen the left slideway sufficiently to permit the bowl support to clear the pedestal.

B. REMOVING LOOSENESS BETWEEN BOWL SUPPORT AND WAYS (Fig. 2):

Excessive play in the bowl support can be taken up by loosening all the screws in the right-hand slideway. The left-hand slideway is doweled and need not be disturbed. Pull the slideways together by placing large clamps across the slideways above and below the bowl support when it is in its top position. Tighten the top three screws A, B, & C. Lower the bowl support to within 1-1/2" of the bottom position, pull the bottom of the slideway in with a clamp, and tighten the lower screw D.

C. ADJUSTING AGITATOR CLEARANCE (Fig. 1):

With the type B beater in place, the bottom clearance between this beater and bowl should be 1/16". To adjust this dimension: unscrew the cover knob (4) at the rear of the pedestal and remove the lift access cover (5). Loosen the jam nut (13). Using an Allen wrench turn the stop screw (14) until the proper adjustment is reached. Lock in place with the jam nut.

D. BOWL CLAMP ADJUSTMENT (Fig. 1):

The height of the bowl clamp (17) is regulated by a washer (18). To change the tension on this clamp tighten or loosen the "Flexloc" nut (19) to suit.

PLANETARY REMOVAL (Fig. 3):

To remove the planetary: first dis-assemble the retaining screw (1) and then slide the planetary from the planetary shaft (2).

To disassemble the planetary after removal from the mixer, proceed as follows:

1. Remove the retaining ring (3).
2. Withdraw the internal pinion (4).
3. Force the agitator shaft (5) down through the upper bearing (6). Note: both the upper (6) and lower (7) beater shaft ball bearings are shielded and grease packed and will require little service attention.

PLANETARY OIL SEAL (Fig. 3):

The main purpose of the seal (8) is to prevent moisture and ingredients from the bowl from reaching the lower bearing. With the agitator shaft removed, the seal should be slipped down from the top of the shaft and over the small shoulder (9). The lip must go up toward the bearing. Make sure that the spring is in place in the seal groove adjacent to the lip. If the lip of the seal is dry, the seal may squeal. A little lubrication under the lip will correct this.

TRANSMISSION DIS-ASSEMBLY (Fig. 3):

Dis-assembly of various parts of the transmission will allow drainage of lubrication. This may be held to a minimum by forcing a cloth into the opening. Remove the retaining screw (10) and withdraw the transmission case cover. Dis-assemble the retaining screws and remove the bearing retainer (11). Next, unscrew the "Flexloc" nut (12) which has a left hand thread. Remove the bearing carrier retaining screws, then while pulling upward lightly tap the center hub of the bearing carrier (13) with a hammer. Lift off the bearing carrier with the bearing (14) in place.

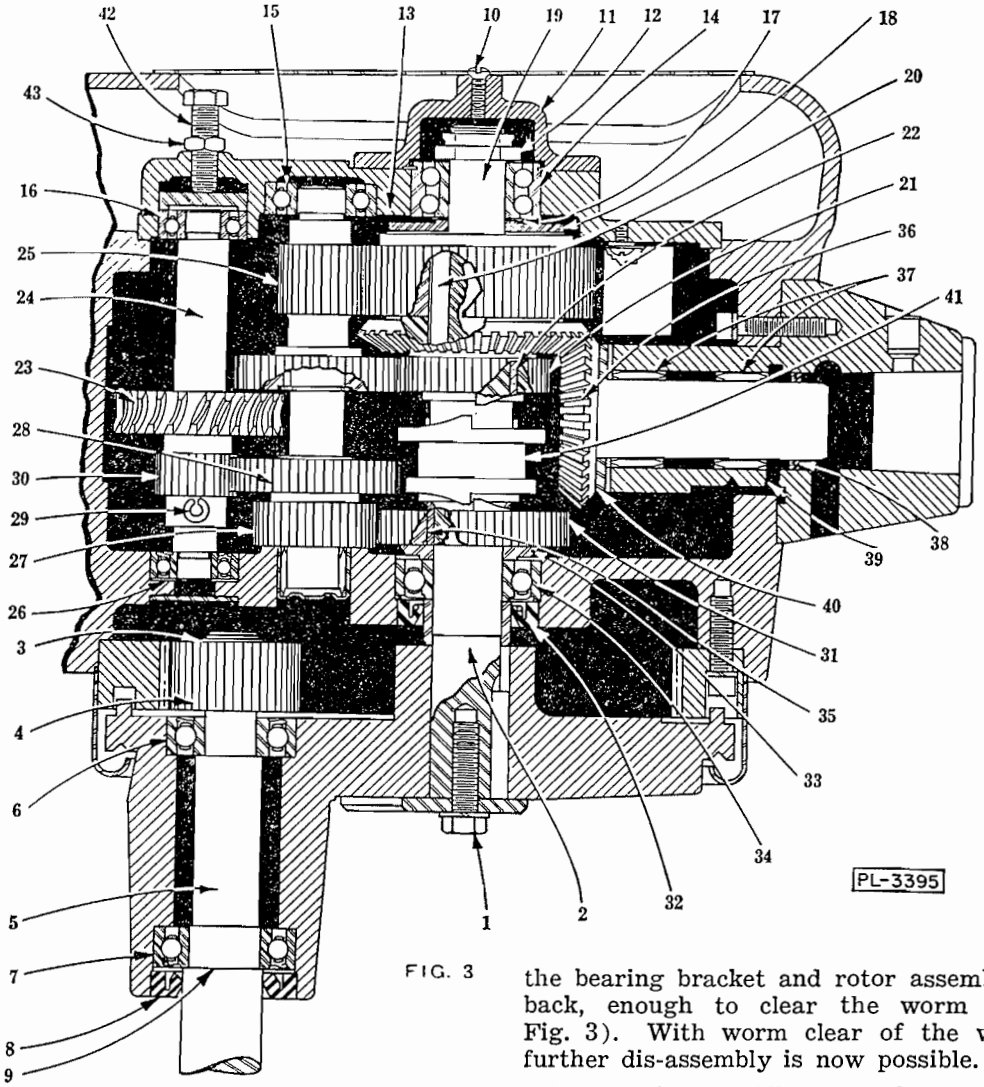

FIG. 3

Caution should be used in removing the carrier as bearings (15) and (16) may also be removed. Next, remove the shim washers (17) and the upper planetary spacer (18). Turn the planetary shaft (19) (in either direction) so that the bevel gear teeth will pass the teeth on the transmission shaft. Next, pull up the bevel gear and roller clutch assembly as a unit. Be careful in removing the roller clutch assembly to prevent losing rollers and springs. Remove the key (20) from the shaft and then the upper clutch gear (21) with bushing (22).

Further dis-assembly necessitates removal of the motor rotor assembly to clear the worm from the worm gear (23), which in turn must be free to allow removal of the worm gear shaft (24). Before pulling the rotor assembly, block up rear of mixer (min. 3″), tilting mixer forward. This prevents lubricant from escaping as rotor is pulled. Next remove retaining screw (15, Fig. 1) and trim cap (16, Fig. 1). Dis-assemble the bearing bracket screws. Insert a screwdriver in each of the two slots in the side of the bearing bracket and pry the bracket loose. Single phase motors require disconnecting the two starting switch leads by pulling off at the spade terminals. Pull the bearing bracket and rotor assembly straight back, enough to clear the worm wheel (23, Fig. 3). With worm clear of the worm wheel further dis-assembly is now possible.

Next, using an Allen wrench loosen the small set screw and withdraw the shifter handle (1, Fig. 4). Dis-assemble the retaining screws and remove the switch plate (2, Fig. 4). Remove the retaining screw, then the index plate unit (3, Fig. 4). The shifter yoke (4, Fig. 4) is now free on its shaft.

Pull the worm shaft (24, Fig. 3), the transmission shaft (25, Fig. 3) and the shifter yoke (4, Fig. 4) straight up out of the case together. Do not lose the worm shaft spring (26) when removing the worm shaft. If this spring is removed, it is important on re-assembly that the cupped shape is up (1, Fig. 5). CAUTION: The lower gear (27) is free to slide from the transmission shaft and must not be dropped. (When re-assembling the transmission shaft into the transmission case, use heavy grease on the face of this gear (27) to make it adhere to the gear (28) above it). Withdraw the three screws from the attachment hub and pull hub forward (to clear gear #31). With the planetary already having been removed (see paragraph on Planetary Removal) it is now possible to remove the planetary shaft (19). Tap the shaft lightly with a lead hammer on the planetary end.

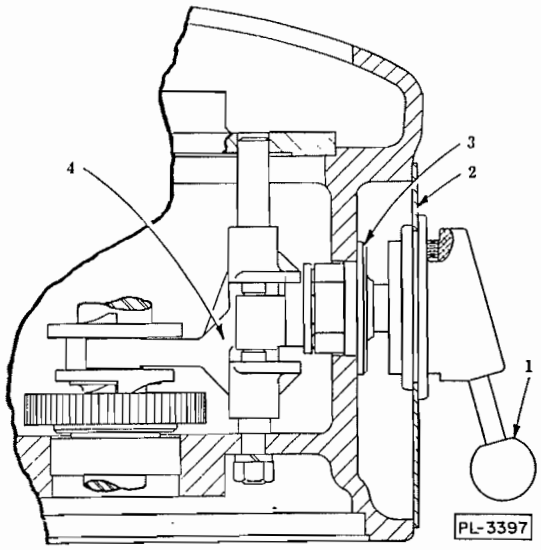

FIG. 4

To dis-assemble the worm shaft assembly, remove the roll pin (29) and slide the 14 tooth gear (30) and the worm gear (23) toward the roll pin end of the shaft. To dis-assemble the transmission shaft gears remove the two retaining rings and slide off the gears. To remove gear (31) from the planetary shaft, remove the seal (32) then use an arbor press. Press the gear, the lower spacer (33), ball bearing (34) and planetary spacer toward the planetary end. If it is ever necessary to remove the lower clutch gear bushing (35) (which is pressed onto the planetary shaft), lay the shaft on a wooden block. Strike the bushing with a hammer to relieve internal tension. Next, using a small sharp cold-chisel, insert it into the space between the bushing and shaft shoulder and force downward. After it is clear of the shaft shoulder, finish removal with a drift punch. A new bushing MUST be used for replacement.

The attachment drive gear (36) will slide free of the hub after the planetary shaft is removed. To remove the needle bearings (37) from the hub, press them forward which also removes the oil seal (38). In replacing these bearings make sure the front bearing does not cover the oil drain hole (39). Always use a new seal (38) after removal of an existing one. A special tool is used for assembly of the seal at the factory. Field assembly of the seal may be accomplished in the following manner: Have the attachment drive gear (36) in its forward position in the hub. Push the seal

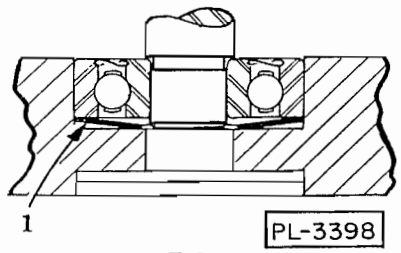

FIG. 5

(with the lip side toward the bearings) into the tapered hub until it starts over the beveled end of the drive gear. Then using a section of tubing (approx. 1-5/32" I.D. x 1-11/32" O.D.) press the seal onto the drive gear to a dimension of 2-1/4" from end of attachment hub. The attachment hub is retained by socket head screws from the inside of the transmission case. If the attachment hub is ever removed at re-assembly it should be sealed with permatex to prevent oil leakage. Washers (40) of various thicknesses are available for proper gear alignment of the attachment drive gear (36).

TRANSMISSION CASE REMOVAL (Fig. 1):

Should it ever become necessary to remove the transmission case the following method should be used:

1. Grind or file the heads from the motor data plate retaining drive screws. Lift off the data plate and then using a punch drive the screws inward (to make room for new drive screws at re-assembly).
2. Remove the hex head screw (located behind the motor data plate).
3. Remove screw (20) allowing air baffle (21) to drop to bottom of pedestal. Remove forward hex head transmission screw.
4. Unscrew the cover knob (4) and remove the access cover (5). The remaining two hex head screws into the transmission are then accessible.

WORM SHAFT ADJUSTMENT (Fig. 3):

It is important that the worm wheel is properly engaged with the worm. Adjustment is made by turning the screw (42). Loosen the lock nut (43) and turn the screw until no resistance or tension is felt from the worm shaft spring. Then tighten the adjustment screw about 1/3 (120°) of a turn, giving an approximate setting. Turn on the mixer and check for noise. Adjust the screw until any unusual noise is eliminated. Tighten lock nut to hold setting.

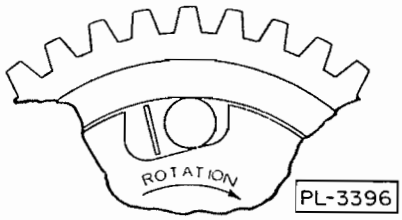

FIG. 6

ROLLER CLUTCH ASSEMBLY:

It is imperative that the roller clutch be assembled as shown in Fig. 6. Improper assembly will cause drive failure.

CLUTCH SLEEVE:

The clutch sleeve (41) must be assembled on the planetary shaft, with the small diameter downward (toward bottom) in order to clear the transmission shaft gear (28).

Page 7 Does Not Exist

Page 7 Does Not Exist

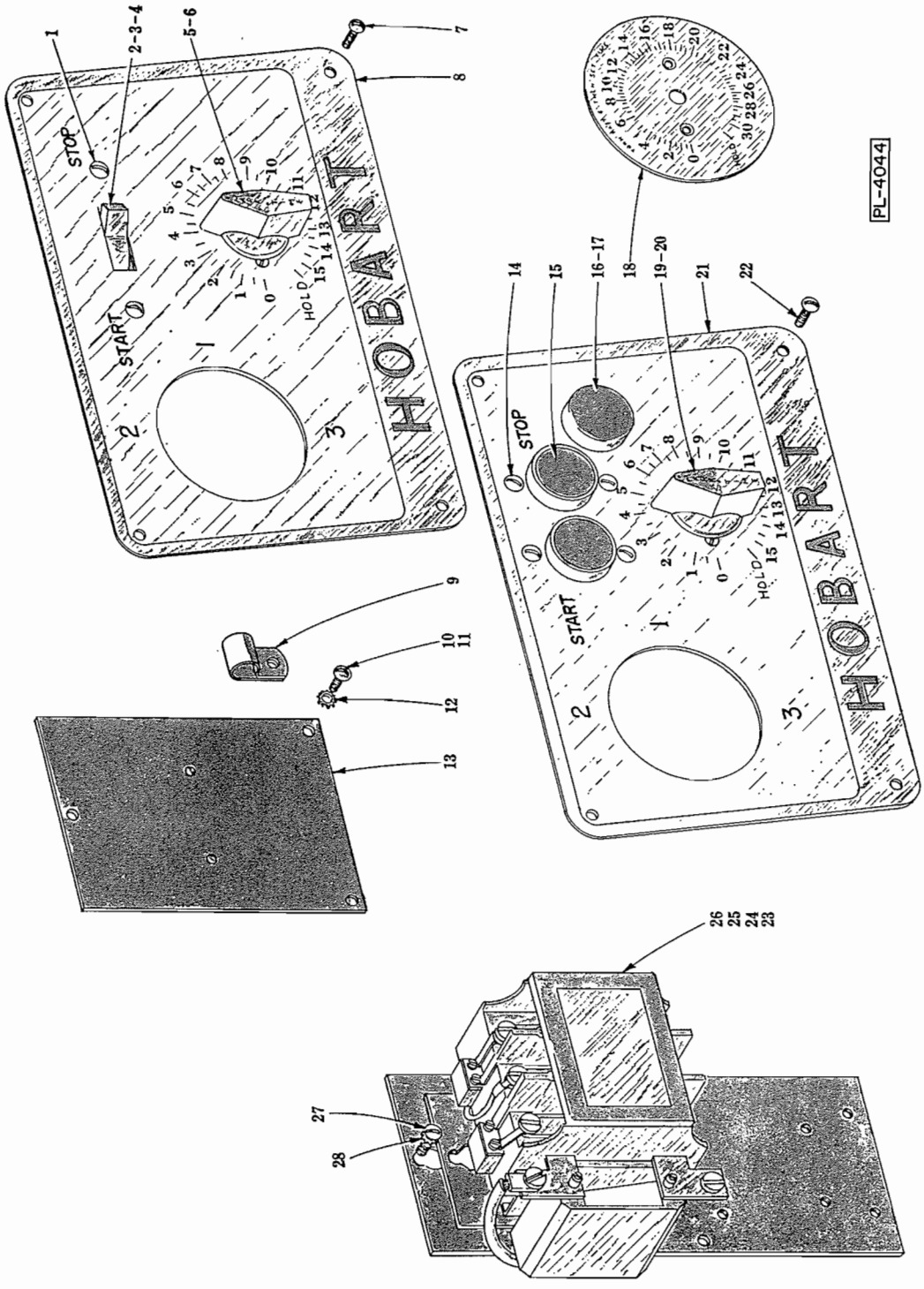

TIMER AND CONTROL UNIT

TIMER AND CONTROL UNIT

ILLUS. PL-4044	PART NO.	NAME OF PART	AMT.
1	SC-30-6	Mach. Screw - #6-32 x 3/8" Oval Hd.	2
2	R-24940-4	Switch (1 Ph., 115 V.)	1
3	P-82944	Starter - Manual (Less Elements) 1 Ph. 115-230 V. Application	1
4	*	Heater Element - Manual Starter (Give Elec. Spec. & Mach. Model)	As Reqd.
5	P-70484-1	Timer (15 Min.) (Incls. Retaining Screws)	1
6	P-70484-2	Timer (30 Min.) (Incls. Retaining Screws)	1
7	SC-19-26	Mach. Screw - #6-32 x 1/4" Bind. Hd.	4
8	C-102852	Plate - Manual Switch & Timer	1
9	M-78752-4	Clip - Wiring	1
10	SC-7-37	Mach. Screw - #8-32 x 1/4" Rd. Hd.	2
11	SC-7-41	Mach. Screw - #8-32 x 3/8" Rd. Hd.	1
12	WL-7-6	Lock Washer - #8 Ext. Shakeproof	3
13	P-70147	Plate - Capacitor Mounting	1
14	SC-26-1	Mach. Screw - #8-32 x 5/16" Phil. Bind. Hd.	4
15	P-87711-102-1	Station - Push Button	2
16	A-102467-2	Cap - Push Button (Stop)	1
17	A-102467-1	Cap - Push Button (Start)	1
18	P-73540	Dial - Timer (30 Min.)	1
19	A-103228	Timer & Gasket (15 Min.) (Incls. Retaining Screws)	1
20	A-103229	Timer, Dial & Gasket (30 Min.) (Incls. Retaining Screws)	1
21	C-102463	Plate - Magnetic Switch & Timer	1
22	SC-19-26	Mach. Screw - #6-32 x 1/4" Bind. Hd.	4
23	P-70483	Starter - Magnetic (Less Elements) 1 Ph. (Give Elec. Spec. & Mach. Model)	1
24	P-69478	Starter - Magnetic (Less Elements) 3 Ph. (under 250 V.) (Give Elec. Spec. & Mach. Model)	1
25	P-69757	Starter - Magnetic (Less Elements) 3 Ph. (over 250 V.) (Give Elec. Spec. & Mach. Model)	1
26	*	Heater Element - Magnetic Starter (Give Elec. Spec. & Mach. Model)	As Reqd.
27	SC-7-37	Mach. Screw - #8-32 x 1/4" Rd. Hd.	3
28	WL-7-6	Lock Washer - #8 Ext. Shakeproof	3
	SC-13-7	Mach. Screw - #5-40 x 1/4" Flat Hd. (Timer to Plate)	2
	M-61285	Boot - Insulating (Not Shown)	As Reqd
	P-72717	Plate - Mounting (For Magnetic Starter P-69478)	1

* Hobart service technician to use Starter Element Part No. as listed on Starter Parts Sheet.

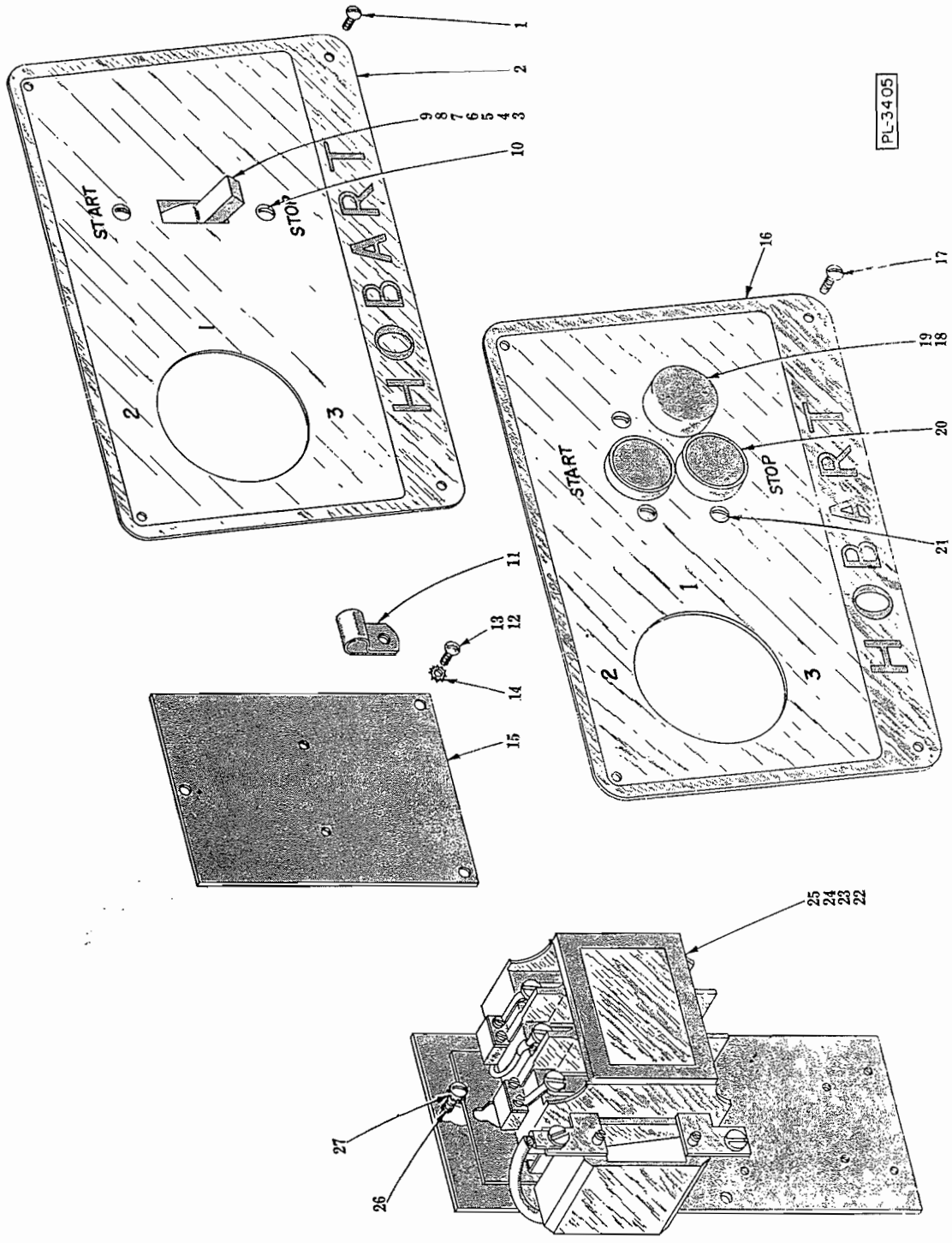
PL-3405
START
STOP
HOBART
1
2
3
4
5
6
7
8
9
10
11
12
13
14
15
16
17
18
19
20
21
22
23
24
25
26
27

SWITCH UNIT

SWITCH UNIT

ILLUS. PL-3405	PART NO.	NAME OF PART	AMT.
1	SC-19-26	Mach. Screw - #6-32 x 1/4" Bind. Hd.	4
2	C-102847	Plate - Manual Switch	1
3	R-24940-4	Switch (1 Ph., 115 V.)	1
4	R-24940-2	Switch (2 & 3 Ph., under 250 V.)	1
5	SS-3-26	Switch (2 & 3 Ph., above 250 V.)	1
6	P-82944	Starter - Manual (Less Elements) 1 Ph., 115-230 V. Application	1
7	P-61917-1	Starter - Manual (Less Elements) 3 Ph., 230-440 V. Application	1
8	*	Heater Element - Manual Starter (Give Elec. Spec. & Mach. Model)	As Reqd.
9	M-70262	Insulator - Switch (for item #7)	1
10	SC-30-6	Mach. Screw - #6-32 x 3/8" Oval Hd.	2
11	M-78752-4	Clip - Wiring	1
12	SC-7-37	Mach. Screw - #8-32 x 1/4" Rd. Hd.	2
13	SC-7-41	Mach. Screw - #8-32 x 3/8" Rd. Hd.	1
14	WL-7-6	Lock Washer - #8 Ext. Shakeproof	3
15	P-70147	Plate - Capacitor Mounting	1
16	C-102455	Plate - Magnetic Switch	1
17	SC-19-26	Mach. Screw - #6-32 x 1/4" Bind. Hd.	4
18	A-102467-2	Cap - Push Button (Stop)	1
19	A-102467-1	Cap - Push Button (Start)	1
20	P-87711-102-1	Station - Push Button	2
21	SC-26-1	Mach. Screw - #8-32 x 5/16" Phil. Bind. Hd.	4
22	P-70483	Starter - Magnetic (Less Elements) 1 Ph. (Give Elec. Spec. & Mach. Model)	1
23	P-69478	Starter - Magnetic (Less Elements) 3 Ph. (under 250 V.) (Give Elec. Spec. & Mach. Model)	1
24	P-69757	Starter - Magnetic (Less Elements) 3 Ph. (over 250 V.) (Give Elec. Spec. & Mach. Model)	1
25	*	Heater Element - Magnetic Starter (Give Elec. Spec. & Mach. Model)	As Reqd.
26	SC-7-37	Mach. Screw - #8-32 x 1/4" Rd. Hd.	3
27	WL-7-6	Lock Washer - #8 Ext. Shakeproof	3
	M-61285	Boot - Insulating (Not Shown)	As Reqd
	P-72717	Plate - Mounting (For Magnetic Starter P-69478)	1

* Hobart service technician to use Starter Element Part No. as listed on Starter Parts Sheet.

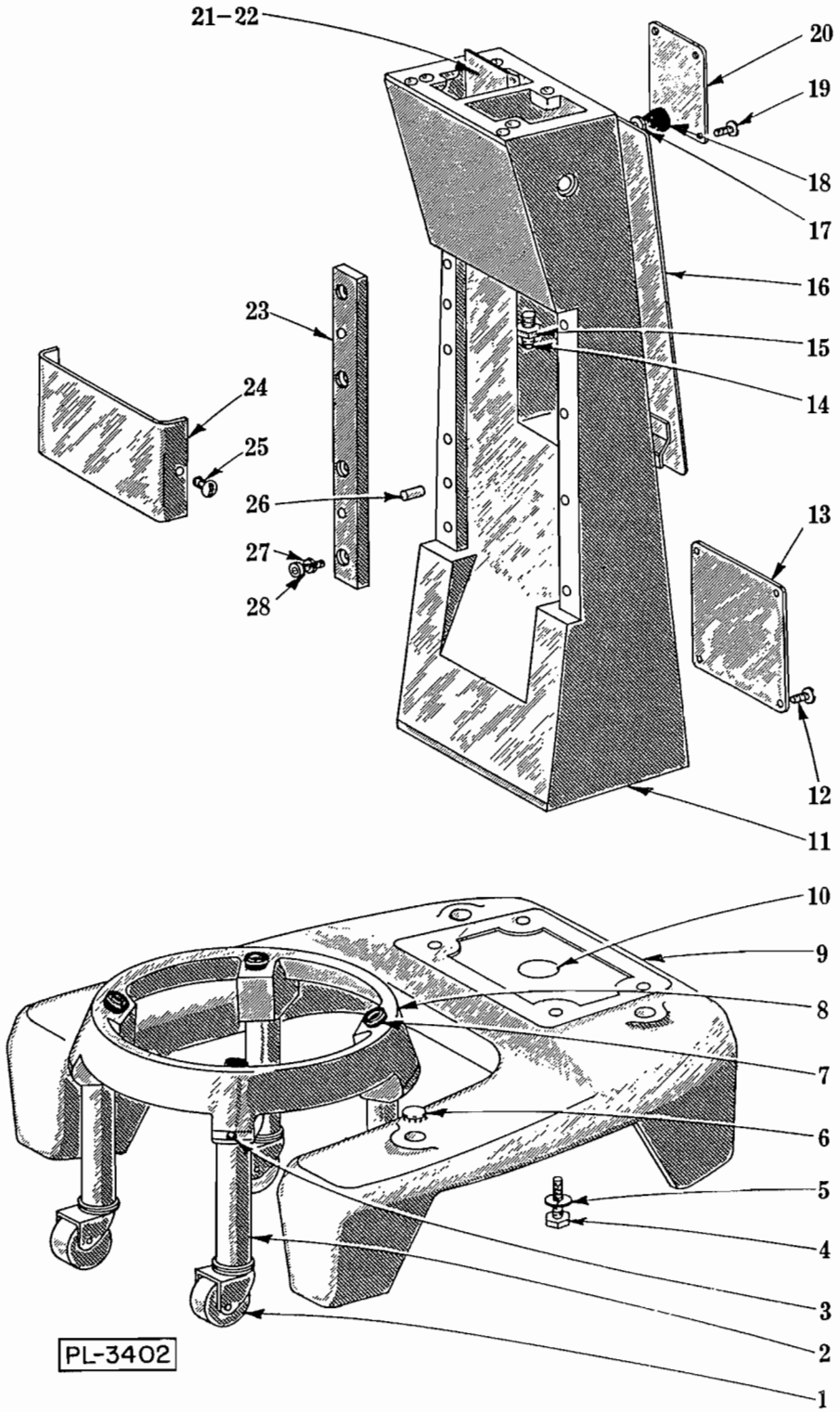

BASE AND PEDESTAL

BASE AND PEDESTAL

ILLUS. PL-3402	PART NO.	NAME OF PART	AMT.
1	P-87668	Caster	4
2	P-70590	Leg	4
3	SC-47-33	Set Screw - 5/16"-18 x 3/8" Soc. Hdls. Cone Pt.	1
4	SC-62-27	Fin. Bolt - 3/8"-16 x 1-3/4" Hex Hd.	4
5	WL-4-2	Lock Washer - 3/8" x .126" x .070"	4
6	M-72442-1	Plug Button	4
7	M-18682	Bumper	4
8	S-70593-1	Bowl Truck Assy. (Incls. items #1, 2, 3 & 7)	1
9	T-69974-1	Base	1
10	PL-3-47	Plug - Expansion	3
11	T-69978-1	Pedestal	1
12	SC-19-26	Mach. Screw - #6-32 x 1/4" Bind. Hd.	4
13	P-70004-1	Cover - Capacitor & Starter Access	1
14	SC-47-46	Set Screw - 3/8"-16 x 1-1/4" Soc. Hdls. Half Dog Pt.	1
15	NS-17-15	Jam Nut - 3/8"-16 Hex Fin.	1
16	R-70144-1	Lift Access Cover Sub-Assy.	1
17	WS-19-26	Washer	1
18	M-70450	Knob - Lift Access Cover	1
19	SD-5-37	Drive Screw - #6 x 1/4" Rd. Hd., Type U	4
20	P-85096	Plate - Mach. Data (Give serial No. and elec. spec.)	1
21	R-70145	Air Baffle Sub-Assy.	1
22	SC-60-51	Mach. Screw - #10-24 x 1" Rd. Hd.	1
23	R-68717	Slideway	2
24	R-68720	Apron	1
25	SC-19-26	Mach. Screw - #6-32 x 1/4" Bind. Hd.	2
26	P-11800-116	Dowel	2
27	WL-3-42	Lock Washer - 5/16" x .047" x .078"	8
28	SC-40-14	Cap Screw - 5/16"-18 x 3/4" Soc. Fil. Hd.	8

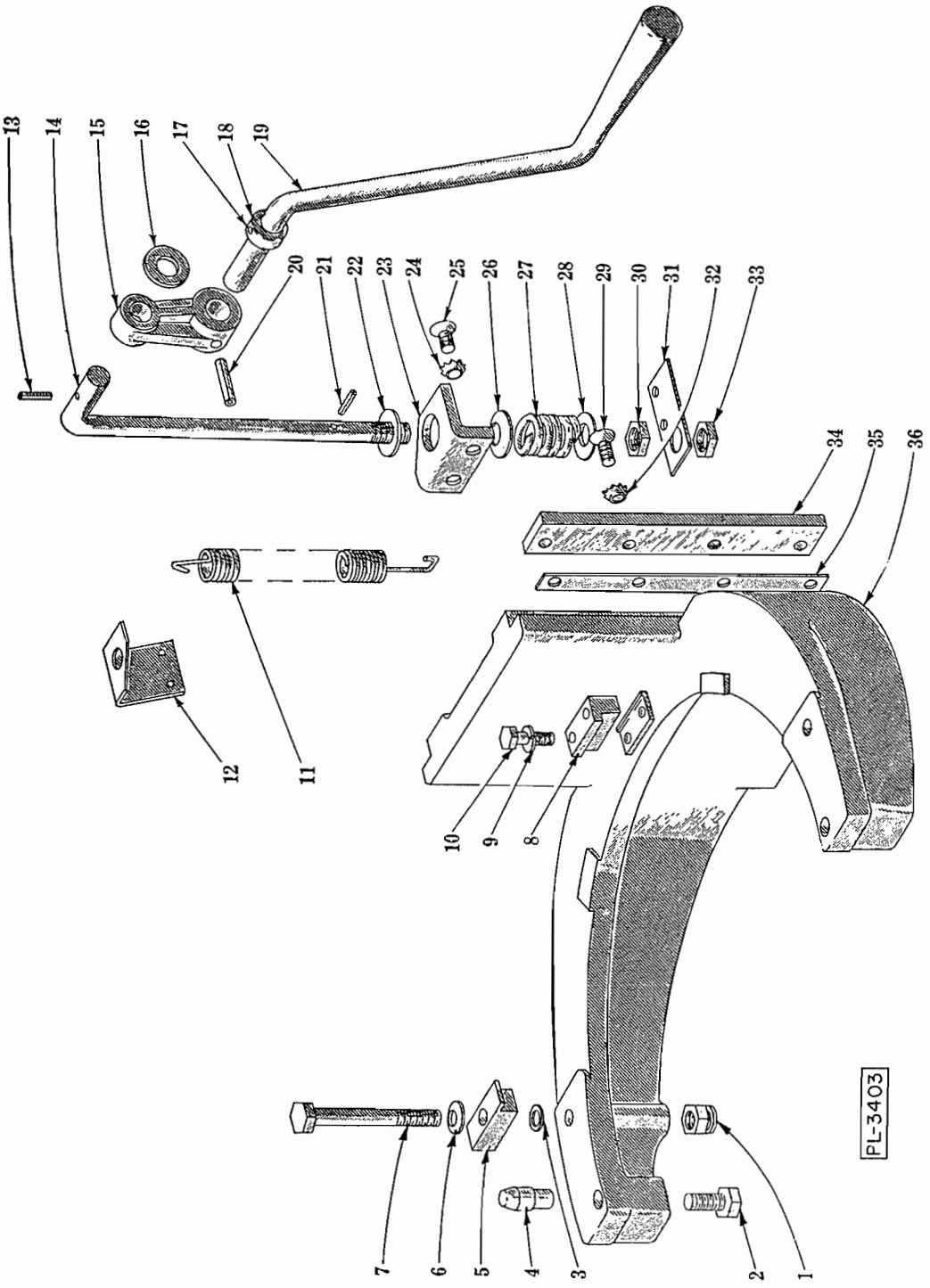

BOWL LIFT UNIT

BOWL LIFT UNIT

ILLUS. PL-3403	PART NO.	NAME OF PART	AMT.
1	NS-32-13	Stop Nut - 5/16"-18 "Flexloc"	2
2	SC-37-75	Fin. Bolt - 5/16"-18 x 3/4" Hex Hd.	2
3	WS-4-18	Washer	2
4	M-70411	Pin - Bowl Locating	2
5	M-70057	Clamp - Bowl	2
6	M-70087	Washer - Spring	2
7	SC-62-28	Fin. Bolt - 5/16"-18 x 3-1/2" Hex Hd.	2
8	M-70044	Retainer - Bowl	1
9	WL-6-16	Lock Washer - 1/4" x .107" x .047"	2
10	SC-36-9	Fin. Bolt - 1/4"-20 x 1-1/4" Hex Hd.	2
11	M-23884	Spring - Counterbalance	2
12	P-70056	Bracket - Upper Spring Lift	1
13	RP-2-25	Rollpin - 1/8" dia. x 7/8" lg.	1
14	P-68718	Rod - Bowl Lift	1
15	P-69995	Arm - Bowl Lift	1
16	WS-8-47	Washer	1
17	— — —	Open Number	-
18	— — —	Open Number	-
19	R-70493	Lift Handle Sub-Assy.	1
20	RP-2-26	Rollpin - 1/4" dia. x 1-1/8" lg.	1
21	RP-2-10	Rollpin - 3/16" dia. x 1" lg.	1
22	WS-8-47	Washer	1
23	P-69998	Bracket - Bowl Lift	1
24	WL-9-14	Lock Washer - 5/16" Csk. Ext. Shakeproof	2
25	SC-61-3	Cap Screw - 5/16"-18 x 3/4" Soc. Flat Hd.	2
26	M-70131	Washer - Cup	1
27	M-70104	Spring - Bowl Lift	1
28	WS-8-47	Washer	1
29	SC-61-3	Cap Screw - 5/16"-18 x 3/4" Soc. Flat Hd.	8
30	NS-17-31	Jam Nut - 1/2"-20 Hex Fin.	1
31	M-70058	Bracket - Lower Spring Lift	1
32	WL-9-14	Lock Washer - 5/16" Csk. Ext. Shakeproof	8
33	NS-17-31	Jam Nut - 1/2"-20 Hex Fin.	1
34	P-69996	Gib	2
35	P-70092	Shim - Bowl Yoke	As Reqd.
36	T-69987	Yoke - Bowl	1

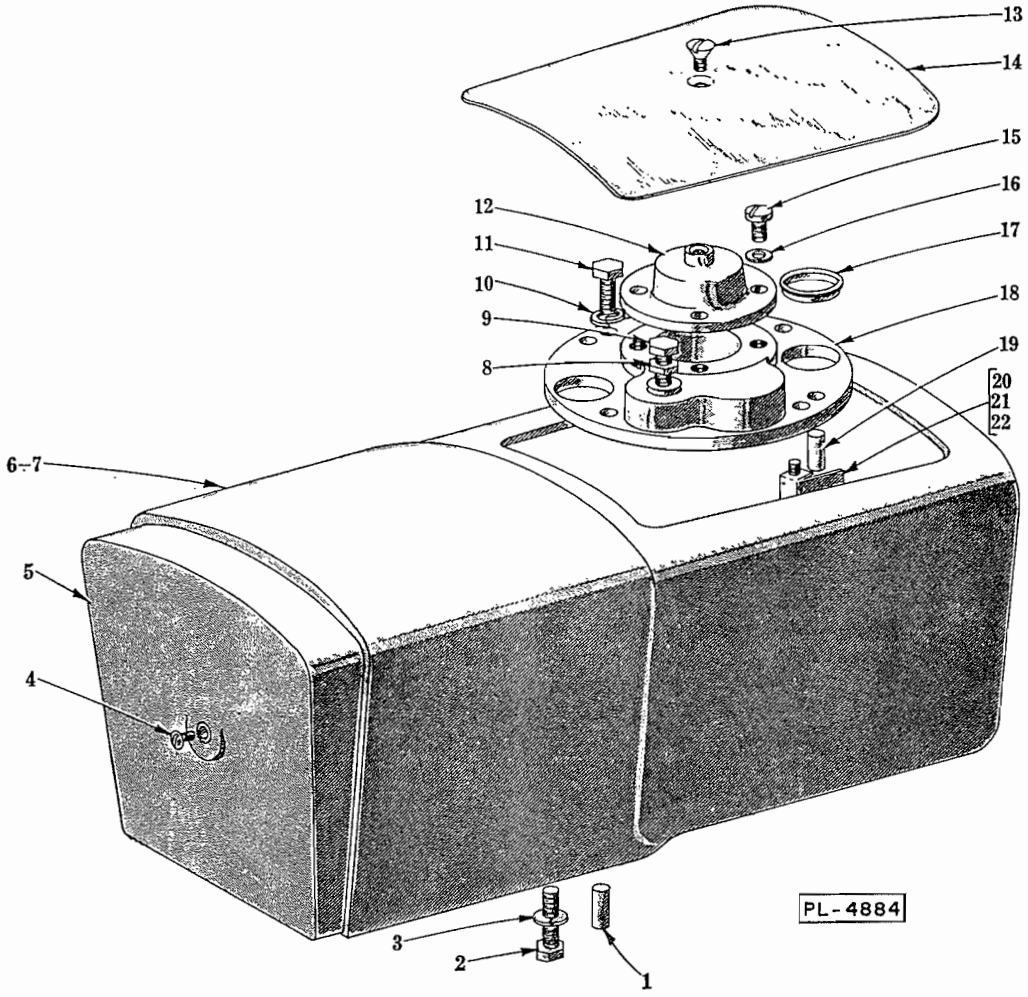

TRANSMISSION CASE

ILLUS. PL-4884	PART NO.	NAME OF PART	AMT.
1	P-11800-221	Dowel	2
2	SC-62-27	Fin. Bolt - 3/8"-16 x 1-3/4" Hex Hd.	4
3	WL-4-2	Lock Washer - 3/8" x .136" x .070"	4
4	M-72189	Mach. Screw - "Nylok" Phil. Truss Hd.	1
5	S-68723-1	Cap - Trim	1
6	T-69975-1	Case - Transmission	1
7	--------	Motor (see separate Motor Parts Sheet)	1
8	NS-17-14	Jam Nut - 3/8"-16 Hex Fin.	1
9	SC-36-57	Fin Bolt - 3/8"-16 x 1-1/4" Hex Hd.	1
10	WL-3-43	Lock Washer - 5/16" x .117" x .056"	4
11	SC-36-26	Fin. Bolt - 5/16"-18 x 7/8" Hex Hd.	4
12	P-70017	Retainer - Bearing	1
13	SC-15-34	Mach. Screw - #10-24 x 1/2" Oval Hd.	1
14	R-70005-1	Cover - Transmission Case	1
15	SC-11-74	Mach. Screw - 1/4"-20 x 5/8" Fil. Hd.	4
16	WL-3-37	Lock Washer - 1/4" x .109" x .062"	4
17	M-64871	Plug - Single Friction	2
18	S-68721	Bearing Carrier - Transmission Case	1
19	P-11800-116	Dowel	2
20	P-70872	Deflector - Roller Clutch Oil	1
21	SC-7-40	Mach. Screw #8-32 x 5/16" Rd. Hd.	1
22	WL-7-6	Lock Washer - #8 Ext. Shakeproof	2
	M-79621	Shim (Between Trans. Case & Ped.) (Not Shown)	As Reqd.

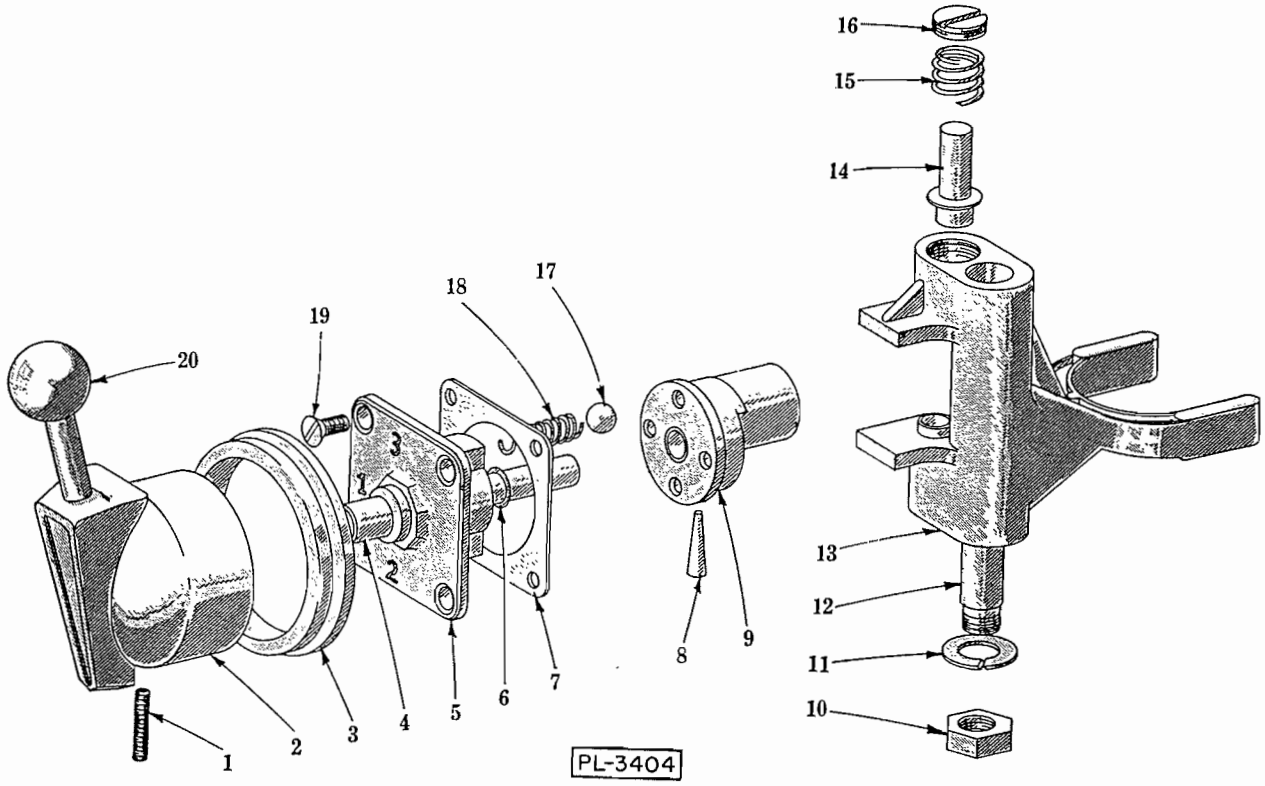

SHIFTER UNIT

ILLUS. PL-3404	PART NO.	NAME OF PART	AMT.
1	SC-75-3	Set Screw - #8-32 x 7/8" Soc. Hd. Cup Pt.	1
2	P-70333	Shifter Handle Sub-Assy.	1
3	P-70084	Grommet - Shifter Handle	1
4	P-70059	Shaft - Shifter	1
5	P-12726-2	Plate - Index	1
6	R-67500-44	"O" Ring	1
7	M-23946	Gasket - Index Plate	1
8	PT-3-28	Taper Pin - #1 x 3/4" Lg.	1
9	M-12729	Cam - Gear Shifter	1
10	NS-13-22	Full Nut - 3/8"-16 Hex Fin.	1
11	WL-4-2	Lock Washer - 3/8" x .136" x .070"	1
12	M-70043	Rod - Shifter Guide	1
13	P-13160	Yoke - Shifter	1
14	V-12733	Plunger - Shifter Yoke	2
15	V-12734	Spring - Shifter Yoke	2
16	V-12732	Retainer - Shifter Yoke Spring	2
17	BA-2-9	Ball - 1/4" Dia.	2
18	V-10755	Spring - Detent	2
19	SC-13-46	Mach. Screw - #10-24 x 1/2" Flat Hd.	4
20	M-70085	Knob - Shifter Handle Ball	1

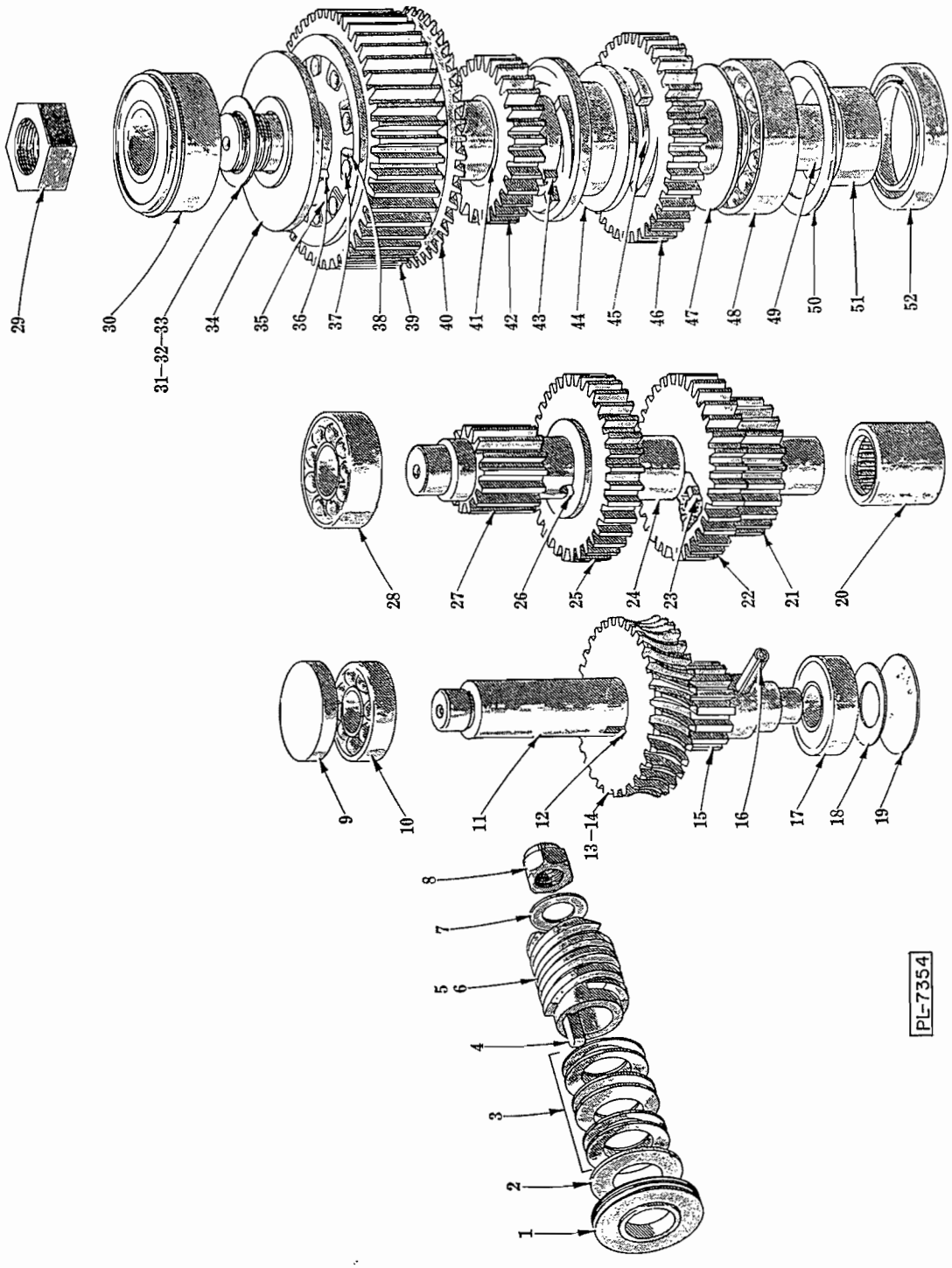

TRANSMISSION

TRANSMISSION

ILLUS. PL-7354	PART NO.	NAME OF PART	AMT.
1	M-13174-1	Deflector - Grease	1
2	WS-10-36	Washer	1
3	M-77840	Washer - "Belleville" (Spring)	6
4	V-12747	Key	1
5	M-70406	Worm - 5T (60 Cycle)	1
6	M-70407	Worm - 5T (50 Cycle)	1
7	WS-7-50	Washer	1
8	NS-32-23	Stop Nut - 7/16"-20 "Flexloc"	1
9	M-70026	Pusher - Bearing	1
10	BB-17-4	Ball Bearing - ND #7501	1
11	P-70036	Shaft - Worm Gear	1
12	R-12430-52	Key	1
13	P-70034	Gear - Worm (29T) (60 Cycle)	1
14	P-70251	Gear - Worm (24T) (50 Cycle)	1
15	M-70027	Gear - Worm Shaft (14T)	1
16	RP-2-5	Rollpin - 1/4" dia. x 7/8" Lg.	1
17	BB-17-4	Ball Bearing - ND #7501	1
18	M-70166	Spring - Worm Shaft	1
19	PL-3-14	Plug - Expansion	1
20	BN-2-2	Needle Bearing	1
21	M-70028	Gear (23T)	1
22	M-70030	Gear (33T)	1
23	M-70260	Key	1
24	M-89829	Spacer	1
25	M-89831	Gear (32T)	1
26	M-89830	Key	1
27	P-89818	Shaft - Transmission	1
28	BB-17-9	Ball Bearing - ND #3203	1
29	NS-32-32	Lock Nut - 3/4"-16 L.H. Thd. "Flexloc"	1
30	BB-9-41	Ball Bearing - ND #45504	1
31	WS-12-45	Washer (.002" thk.)	As Reqd.
32	WS-12-46	Washer (.003" thk.)	As Reqd.
33	WS-12-47	Washer (.010" thk.)	As Reqd.
34	M-70015	Spacer - Upper Planetary Shaft	1
35	P-70033	Sleeve - Drive	1
36	R-12430-161	Key	1
37	M-70039	Roller - Clutch	10
38	M-70055	Spring - Roller	10
39	P-70032	Gear - Roller Clutch (46T)	1
40	P-70020	Gear - Bevel (46T)	1
41	M-70042	Bushing - Upper Clutch Gear	1
42	P-70040	Gear - Upper Clutch (29T)	1
43	R-12430-55	Key	2
44	P-70035	Sleeve - Clutch	1
45	M-70031	Bushing - Lower Clutch Gear	1
46	P-70095	Gear - Lower Clutch (38T)	1
47	M-70046	Spacer - Lower Planetary Shaft	1
48	BB-8-33	Ball Bearing - Fafnir #205WD	1
49	M-71187	Planetary Shaft & Bushing Sub-Assy. (Incls. item #45)	1
50	M-75050	Washer - Spacing	1
51	M-70016	Spacer - Planetary	1
52	P-70088	Seal - Planetary	1

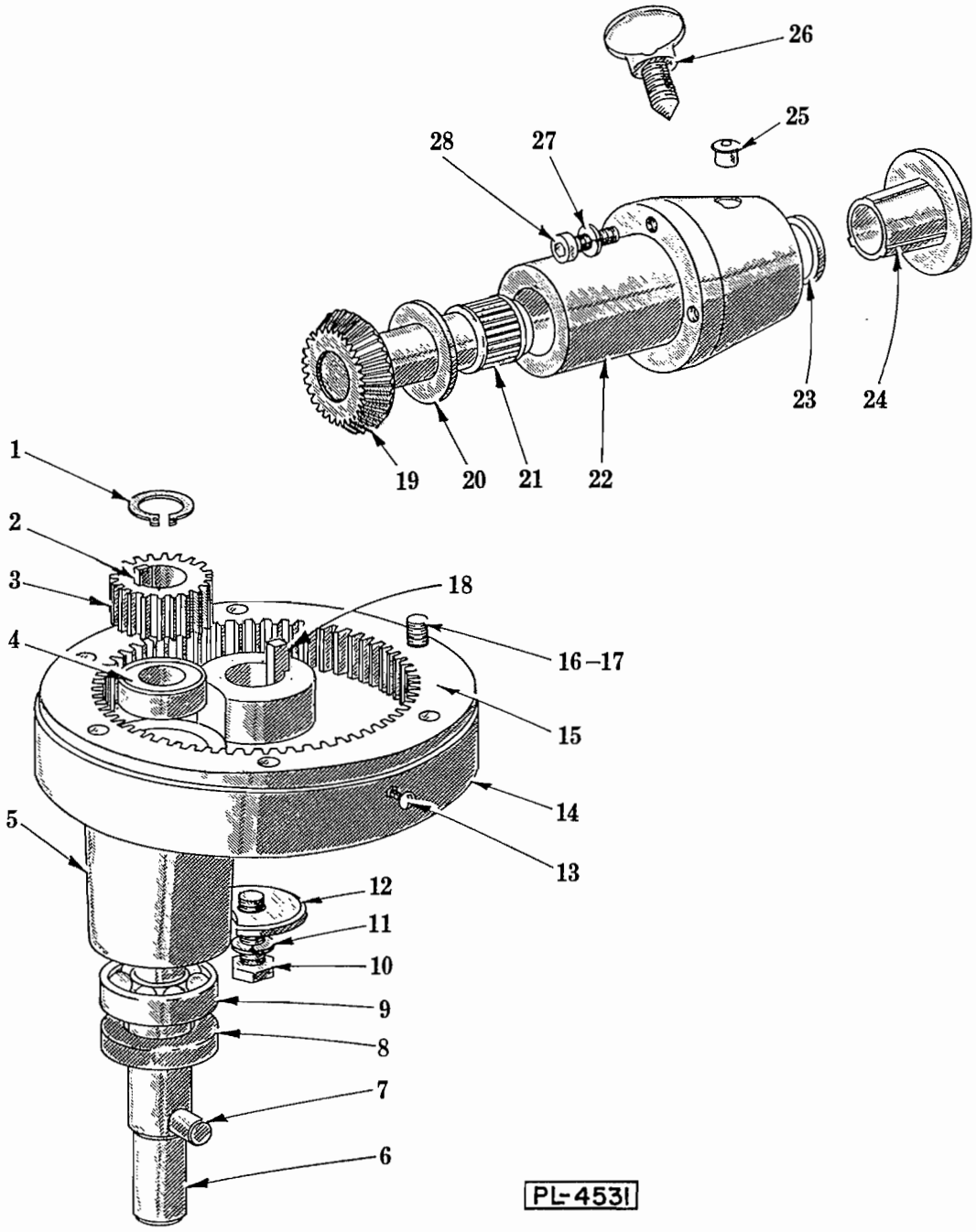

PLANETARY AND ATTACHMENT HUB

PLANETARY AND ATTACHMENT HUB

ILLUS. PL-4531	PART NO.	NAME OF PART	AMT.
1	RR-4-6	Retaining Ring	1
2	R-12430-142	Key	1
3	M-70014	Pinion - Agitator Shaft (18T)	1
4	BB-20-6	Ball Bearing - ND #7504	1
5	S-69990-1	Planetary	1
6	M-70339	Agitator Shaft Sub-Assy. (Incls. item #7)	1
7	M-70019	Pin - Agitator	1
8	P-70089	Seal - Agitator Shaft	1
9	BB-17-36	Ball Bearing - ND #7505	1
10	SC-36-75	Fin. Bolt - 3/8"-24 x 1-1/4" Hex Hd.	1
11	WL-4-2	Lock Washer - 3/8" x .136" x .070"	1
12	M-70047-1	Washer - Planetary	1
13	SC-19-26	Mach. Screw - #6-32 x 1/4" Bind. Hd.	2
14	R-68719	Cup - Planetary Drip	1
15	S-69994	Gear - Internal (59T)	1
16	SC-40-16	Cap Screw - 5/16"-18 x 1" Soc. Hd.	6
17	WL-3-42	Lock Washer - 5/16" x .047" x .078"	6
18	R-12430-158	Key	1
19	M-75393	Attach. Drive Gear (35T) & Expan. Plug Sub-Assy.	1
20	M-70045	Washer - Thrust (Give Thks.)	1
21	BN-2-12	Bearing - Needle	2
22	P-70511	Attachment Hub & Seal Assy. (Incls. items #21 & 23)	1
23	P-70090	Seal - Attachment Hub	1
24	P-70229-1	Plug - Attachment Hub	1
25	OG-3-30	Oiler - 7/16" Ball Valve	1
26	M-4202-2	Thumb Screw	1
27	WL-3-43	Lock Washer - 5/16" x .117" x .056"	3
28	SC-40-15	Cap Screw - 5/16"-18 x 1-1/4" Soc. Fil. Hd.	3

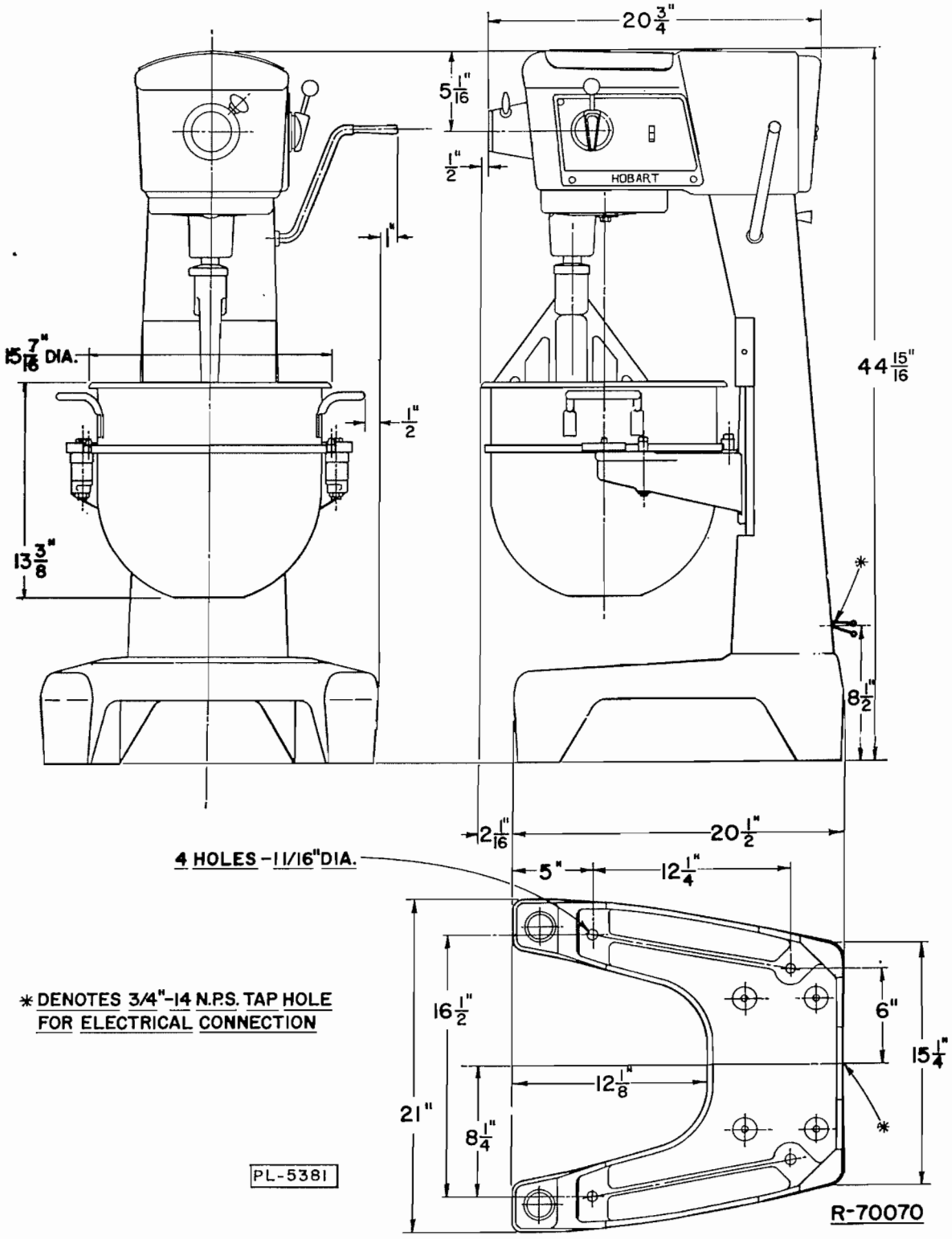

INSTALLATION DIAGRAM

SUPPLEMENT

Attach to form 6868C for model D-300 & D-300T

This supplement lists exceptions to the above form and is made for machines built under spec.16127;16129.ALL parts listed hereon REPLACE or ADD TO those listed in attached manual.

EXCEPTIONS:

Pg.	Illus.	New Part No.	Part Name	Replaces Part No. (Printed in Manual)
13	9	E-105091	Base Assy.	T-69974-1
-	-	A-105306	Rubber Foot	New Part
-	-	A-105327	Plug - Rubber Foot	New Part

SUPPLEMENT

Attach to form 6868C for model D-300 & D-300T

This supplement lists exceptions to the above form and is made for machines built under spec.16127;16129.ALL parts listed hereon REPLACE or ADD TO those listed in attached manual.

EXCEPTIONS:

Pg.	Illus.	New Part No.	Part Name	Replaces Part No. (Printed in Manual)
13	9	E-105091	Base Assy.	T-69974-1
-	-	A-105306	Rubber Foot	New Part
-	-	A-105327	Plug - Rubber Foot	New Part

THE HOBART MANUFACTURING COMPANY
TROY, OHIO