HOBART

CATALOG OF REPLACEMENT PARTS



D300 Series Mixers

ML-104420	D300 (Non-Timed)
ML-104421	D300T (Timed)
ML-104422	D300D (Non-Timed)
ML-104423	D300DT (Timed)

A product of HOBART 701 S. RIDGE AVENUE TROY, OHIO 45374-0001

FORM 19118 Rev. A (August 2018)

 © HOBART 2018

Table of Contents

5 MAGNETIC CONTROL UNIT
7 TIMER CONTROL AND SWITCH UNIT
9 BASE AND PEDESTAL
11 BOWL LIFT UNIT
13 TRANSMISSION CASE
15 MOTOR PARTS
17 SHIFTER UNIT
19 TRANSMISSION
21 PLANETARY AND ATTACHMENT HUB
23 BOWL GUARD UNIT
25 BOWL
27 AGITATORS
29 BOWL HEIGHT SENSING UNIT

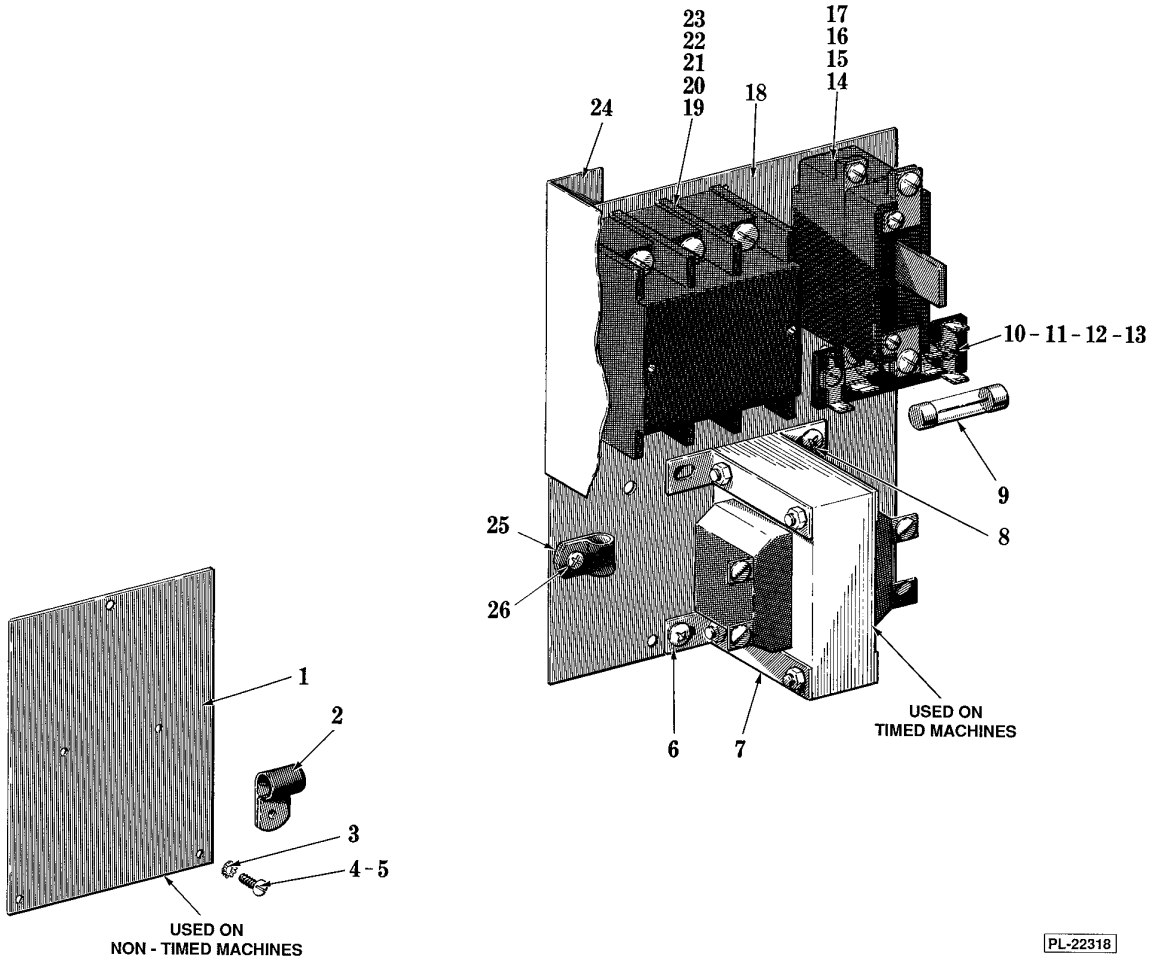

MAGNETIC CONTROL UNIT

MAGNETIC CONTROL UNIT

ILLUS. PL-22318	PART NO.	NAME OF PART	AMT.
1	0271920	Plate - Capacitor Mounting	1
2	78752-4	Clip - Wiring	1
3	WL-7-6	Lockwasher 8 External Shakeproof	3
4	SC-7-37	Mach. Screw 8-32 x 1/4 Rd. Hd	2
5	SC-7-41	Mach. Screw 8. 32 x 3/8 Rd. Hd	1
6	SD-15-20	Self-Tapping Screw 10-32 x 3/8 Phil. Pan Hd., Type TT (Above 250 V.)(3 Ph.)	1
7	101935	Transformer (Above 250 V.)(3 Ph.)	1
8	SD-15-20	Self-Tapping Screw 10-32 x 3/8 Phil. Pan Hd., Type TT (Above 250 V.)(3 Ph.)	1
9	FE-9-25	Fuse (1/2 Amp)(Above 250 V.)(3 Ph.)	1
10	124017	Fuse Block Assy.(Above 250 V.)(3 Ph.)	1
11	85432	Insulator - Fuse Block (Above 250 V.)(3 Ph.)	1
12	SC-9-49	Mach. Screw 6-32 x 3/8 Rd. Hd	1
13	NS-9-7	Mach. Nut 6-32 Hex	1
14	88196-6-1	Relay - Thermal Overload (1 Ph.)	1
15	88196-5-1	Relay - Thermal Overload (3 Ph.)(Tri-Block)(Not Shown)	1
16		Heater Element - Overload (Give elec. Spec., Mach. Model & Motor Type)	AR
17	123131	Self-Tapping Screw 8-32 x 3/8 Truss Hd."Taptite"	2
18	271911	Panel - Control	1
19	87713-37-2	Contactor (115 V. Coil)(2 Pole)	1
20	87713-37-1	Contactor (220 V. Coil)(2 Pole)	1
21	87713-39-1	Contactor (200/230 V., 60 Hz.; 220 V., 50 Hz.)(3 Ph.)(3 Pole)	1
22	87713-39-2	Contactor (460 V., 60 Hz.; 380/415 V., 50 Hz.)(3 Ph.)(3 Pole)	1
23	SD-8-25	Self-Tapping Screw 10-16 x 3/8 Phil Bind Hd., Type B	2
24	294815	Insulator	1
25	78752-4	Clip - Wiring	1
26	SD-8-25	Self-Tapping Screw 10-16 x 3/8 Phil Bind Hd., Type B	1

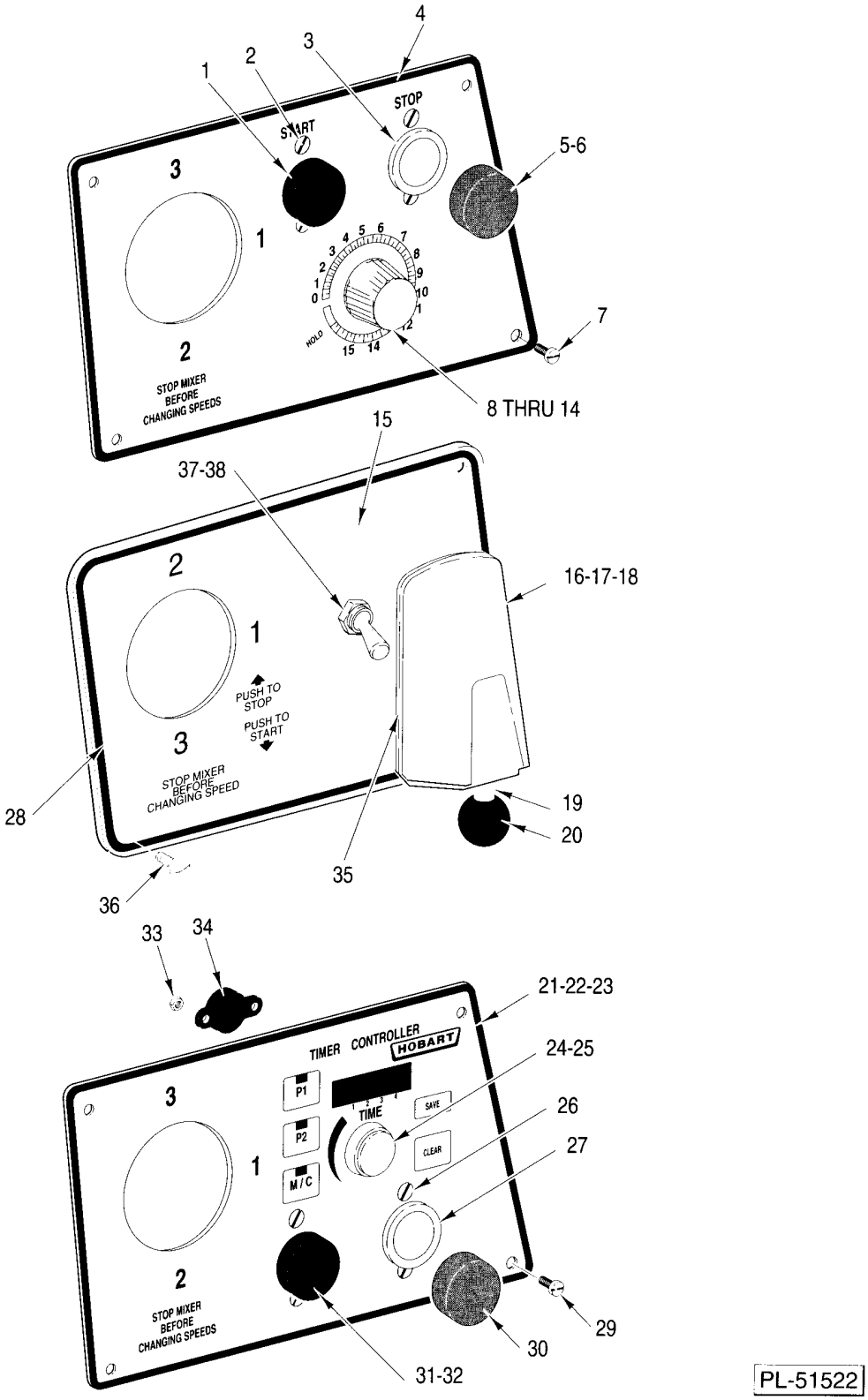

TIMER CONTROL AND SWITCH UNIT

TIMER CONTROL AND SWITCH UNIT

ILLUS. PL-51522	PART NO.	NAME OF PART	AMT.
1	87711-183-1	Switch - Push Button	1
2	SC-13-12	Mach. Screw 6-32 x 1/4 Flat Hd	4
3	87711-183-2	Switch - Push Button	1
4	291725	Plate - Switch & Timer	1
5	102467-1	Cap - Push Button (Start) (Black)	1
6	102467-2	Cap - Push Button (Stop) (Red)	1
7	SD-24-1	Self-Tapping Screw 10-24 x 3/8 Pan Hd., Type TT	4
8	291748	Knob - Timer	1
9	294650-4-1	Timer Assy.(115 V., 60 Hz.)(Machine W/Pilot Circuit)	1
10	294650-4-2	Timer Assy. (200/300 V. 60 Hz.)	1
11	294650-4-3	Timer Assy. (115 V. 50 Hz.) (Machines W/Pilot Circuit)	1
12	294650-4-4	Timer Assy. ((230 V. 50 Hz.)	1
13	SC-13-7	Mach. Screw 5-40 x 1/4 Flat Hd	2
14	291751	Insulation	1
15	SD-15-41	Self-Tapping Screw 8-32 x 1/2 Phil. Pan Hd., "Taptite"	2
16	105305-2	Switch Rod & Housing Assy. (Incls. items 17 thru 20)	1
17	105150	Housing - Switch Seal	1
18	121559	Sleeve - Actuating Rod	1
19	270326	Rod - Switch Actuating	1
20	105197	Knob - Switch Rod	1
21	439338-1	Switch Plate & Keypad Assy	1
22	439355-1	Board Assy. (120 V.)	1
23	439355-2	Board Assy. (240 V.)	1
24	437775	Knob - Potentiometer	1
25	437742	Seal - Shaft	1
26	SC-53-38	Mach. Screw 6-32 x 1/4 Truss Hd	4
27	87711-183-2	Switch - Push Button	1
28	270325	Plate - Toggle Switch	1
29	SD-24-1	Self-Tapping Screw 10-24 x 3/8 Pan Hd., Type TT	4
30	102467-2	Cap - Push Button (Stop) (Red)	1
31	87711-183-4	Switch - Push Button (N.O.)	1
32	102467-1	Cap - Push Button (Start) (Black)	1
33	NS-46-17	Stop Nut 4-40 Hex	2
34	438488	NLA - Obsolete--Buzzer	1
35	105050	Gasket - Switch Housing	1
36	SD-24-1	Self-Tapping Screw 10-24 x 3/8 Pan Hd., Type TT	4
37	WS-8-4	Washer	1
38	87711-229	Switch - Toggle	1
	117542-21	Cord & Plug (115 V.)	AR
	65890-85	Line Splice (Use With Items 9 thru 12)	1
	508494	NLA - Obsolete--Tape - Electrical	AR

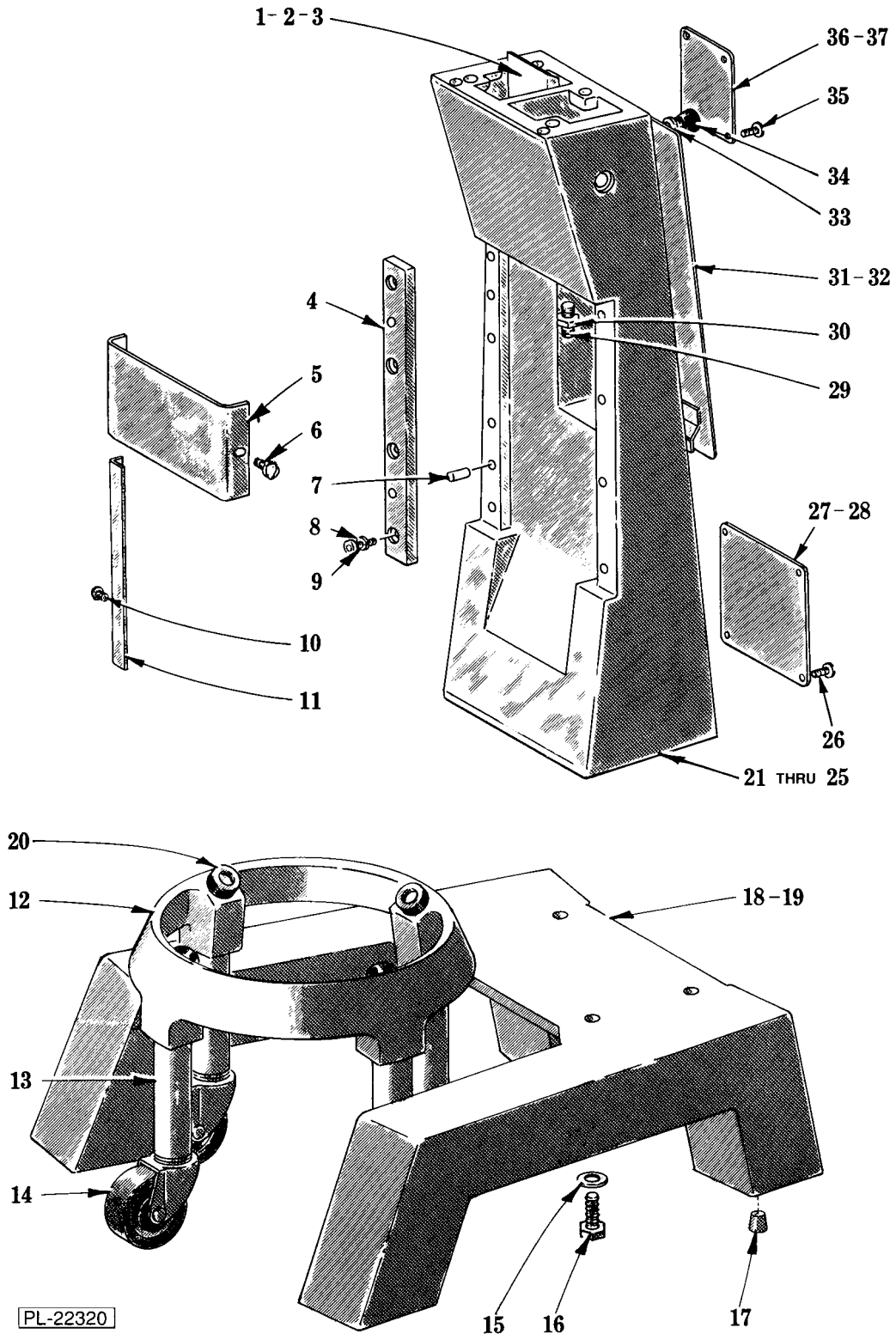

BASE AND PEDESTAL

BASE AND PEDESTAL

ILLUS. PL-22320	PART NO.	NAME OF PART	AMT.
1	70145	Air Baffle Assy.	1
2	SC-13-55	Mach. Screw 10-24 x 1 Flat Hd (D300 & D300T)	1
3	SC-16-4	Mach. Screw 10-24 x 1 Oval Hd (D300D & D300DT)	1
4	68717	Slideway	2
5	437723	Apron	1
6	70641-11	Thumb Screw 8-32 "Special"	2
7	11800-116	Dowel	2
8	WL-3-48	Lockwasher 5/16 High Collar	8
9	SC-40-14	Cap Screw 5/16-18 x 3/4 Soc. Fil. Hd	8
10	70641-11	Thumb Screw 8-32 "Special" (D300D & D300DT)	4
11	70403	Cover - Slideways (D300D & D300DT)	2
12	70593-2	Bowl Truck Assy.(Incls.items 13,14 & 20)	1
13	70590-1	Leg (6 Long) (30 Qt.)	4
14	87668-2	Caster	4
15	WS-18-19	Washer	4
16	SC-62-22	Cap Screw 3/8-16 x 1-1/4 Hex Hd	4
17	114992	Plug - Base (Plug for Foot Pad)	AR
18	110146-2	Base Assy. (D300 & D300T)	1
19	110115-3	Base Assy. (D300D & D300DT)	1
20	18682-1	Bumper	4
21	123961-4	Pedestal (D300 & D300T)	1
22	123961-8	NLA - Obsolete--Pedestal (D300D & D300DT)	1
23	87532-88	Lead Wire Assy.(Grd.)	1
24	SD-24-1	Self-Tapping Screw 10-24 x 3/8 Pan Hd., Type TT	1
25	WL-10-6	Lockwasher 10 Ext. Shakeproof	1
26	123109	Screw 6-32 x 3/8 Serrated Hd	4
27	123969-1	Cover & Gasket Assy. (Capacitor & Starter Access) (D300 & D300T)	1
28	123969-3	NLA - Obsolete--Cover & Gasket Assy. (Capacitor & Starter Access) (D300D & D300DT)	1
29	SC-47-46	Set Screw 3/8-16 x 1-1/4 Soc. Hdls., Half-Dog Pt	1
30	NS-17-15	Jam Nut 3/8-16 Hex	1
31	70144-1	Lift Access Cover Assy (D300 & D300T)	1
32	70144-5	Lift Access Cover Assy (D300D & D300DT)	1
33	WS-19-26	Washer	1
34	70450	Knob - Lift Access Cover	1
35	121676-3	Screw - Special	4
36	438795-1	Plate - Mach. Data (Give Serial No. & Elec. Spec.)(60Hz.)	1
37	438795-3	Plate - Mach. Data (Give Serial No. & Elec. Spec.)(50Hz.)	1

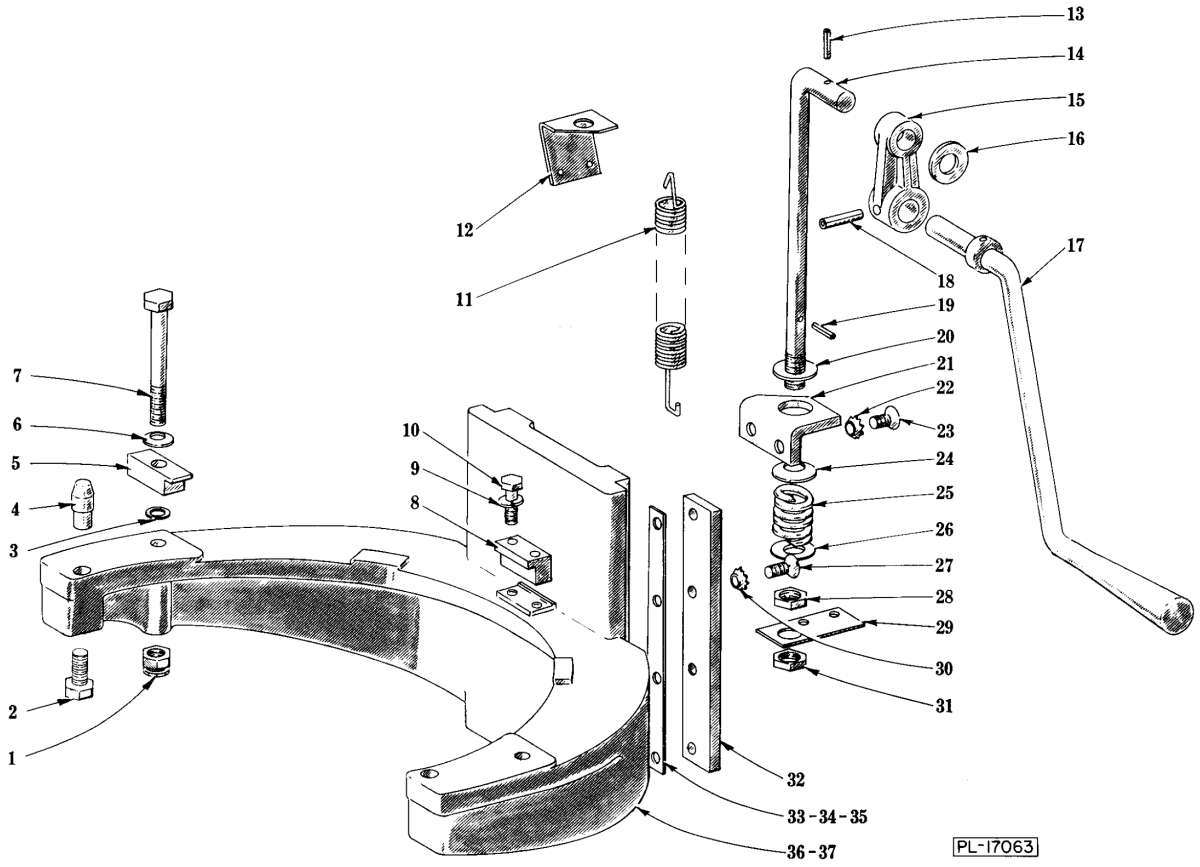

BOWL LIFT UNIT

BOWL LIFT UNIT

ILLUS. PL-17063D	PART NO.	NAME OF PART	AMT.
1	NS-32-13	Lock Nut 5/16-18 "Flexloc"	2
2	SC-37-75	Cap Screw -5/16-18 x 3/4 Hex Hd	2
3	WS-4-18	Washer	2
4	70411	Pin - Bowl Locating	2
5	70057	Clamp - Bowl	2
6	70087	Washer - Spring	2
7	SC-62-28	Cap Screw 5/16-18 x 3-1/2 Hex Hd	2
8	70044	Retainer - Bowl	1
9	WL-6-16	Lockwasher 1/4 Light	2
10	SC-36-9	Cap Screw 1/4-20 x 1-1/4 Hex Hd	2
11	23884	Spring - Counterbalance	2
12	70056	Bracket - Upper Spring Lift	2
13	RP-2-25	Roll Pin 1/8 Dia. x 7/8 Lg	1
14	68718	Rod - Bowl Lift	1
15	69995	Arm - Bowl Lift	1
16	WS-8-47	Washer	1
17	293564	Lift Handle Assy	1
18	RP-2-26	Roll Pin 1/4 Dia. x 1-1/8 Lg	1
19	RP-2-10	Roll Pin 3/16 Dia. x 1 Lg	1
20	WS-8-47	Washer	1
21	438474	Bracket - Bowl Lift	1
22	WL-9-14	Lockwasher 5/16 Csk. Ext. Shakeproof	2
23	SC-61-3	Cap Screw 5/16-18 x 3/4 Soc. Flat Hd	2
24	70131	Washer - Cup	1
25	70104	Spring - Bowl Lift	1
26	WS-8-47	Washer	1
27	SC-61-3	Cap Screw 5/16-18 x 3/4 Soc. Flat Hd	8
28	NS-17-31	Jam Nut 1/2-20 Hex	1
29	70058	Bracket - Lower Spring Lift	1
30	WL-9-14	Lockwasher 5/16 Csk. Ext. Shakeproof	8
31	NS-17-31	Jam Nut 1/2-20 Hex	1
32	69996	Gib	2
33	70092-1	Shim - Bowl Support (.001" Thk.)	AR
34	70092-2	Shim - Bowl Support (.002" Thk.)	AR
35	70092-3	Shim - Bowl Support (.003" Thk.)	AR
36	69987-2	Support - Bowl (D300 & D300T)	1
37	69987-3	NLA - Obsolete--Support - Bowl (D300D & D300DT)	1

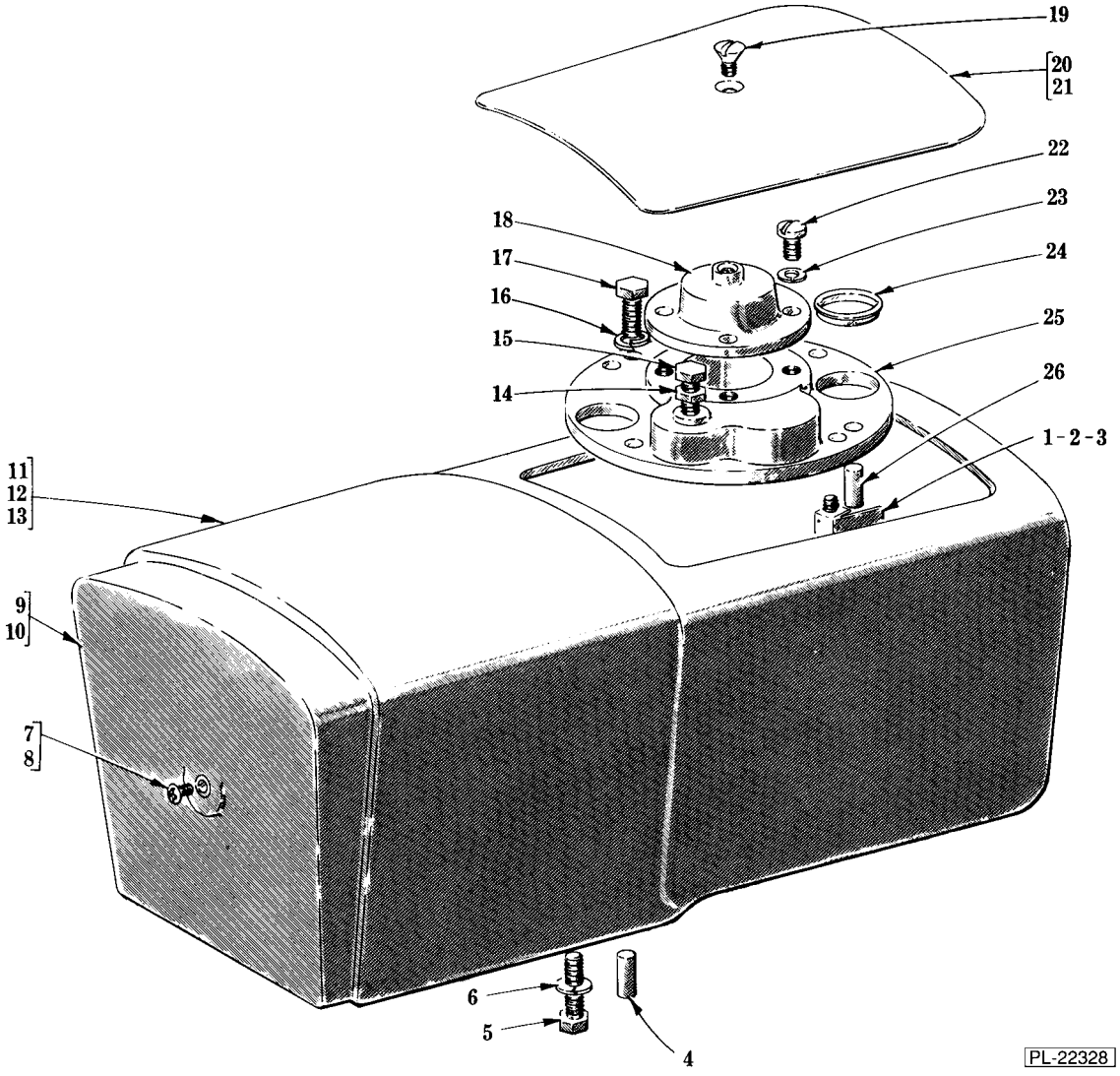

TRANSMISSION CASE

TRANSMISSION CASE

ILLUS. PL-22328	PART NO.	NAME OF PART	AMT.
1	70872	Deflector - Roller Clutch Oil	1
2	SC-7-40	Mach. Screw 8-32 X 5/16 Rd. Hd	1
3	WL-7-6	Lockwasher 8 External Shakeproof	2
4	270777	Dowel	2
5	SC-62-27	Cap Screw 3/8-16 x 1-3/4 Hex Hd	4
6	WL-4-2	Lockwasher 3/8 Light	4
7	SC-113-52	Mach. Screw 10-24 x 1/2 Phil. Truss Hd (D300 & D300T)	1
8	72189	Mach. Screw "Nylok" Phil. Truss Hd (D300D & D300DT)	1
9	289326	Cap - Trim (D300 & D300T)	1
10	437918-4	Cap - Trim (D300D & D300DT)	1
11	290505-1	Case - Transmission (D300 & D300T)	1
12	290505-4	NLA - Obsolete--Case - Tansmission (D300D & D300DT)	1
13		Motor - (See Motor Parts page)	1
14	NS-17-14	Jam Nut 3/8-16 Hex	1
15	SC-36-57	Cap Screw 3/8- 16 x 1-1/4 Hex Hd	1
16	WL-3-43	Lockwasher 5/16 Light	4
17	SC-36-26	Cap Screw 5/16-18 x 7/8 Hex Hd	4
18	70017	Retainer - Bearing	1
19	SC-15-36	Mach. Screw 10-24 x 5/8 Oval Hd	1
20	70005-1	Transmission Case Cover Assy (D300 & D300T)	1
21	70005-4	Transmission Case Cover Assy (D300D & D300DT)	1
22	SC-11-74	Mach. Screw 1/4-20 x 5/8 Fil. Hd	4
23	WL-3-37	Lockwasher 1/4 Medium	4
24	64871	Plug - Friction	2
25	68721	Bearing Carrier - Transmission Case	1
26	11800-116	Dowel	2
	79621	Shim (Between Trans. Case & Ped.)(Not Shown)	AR

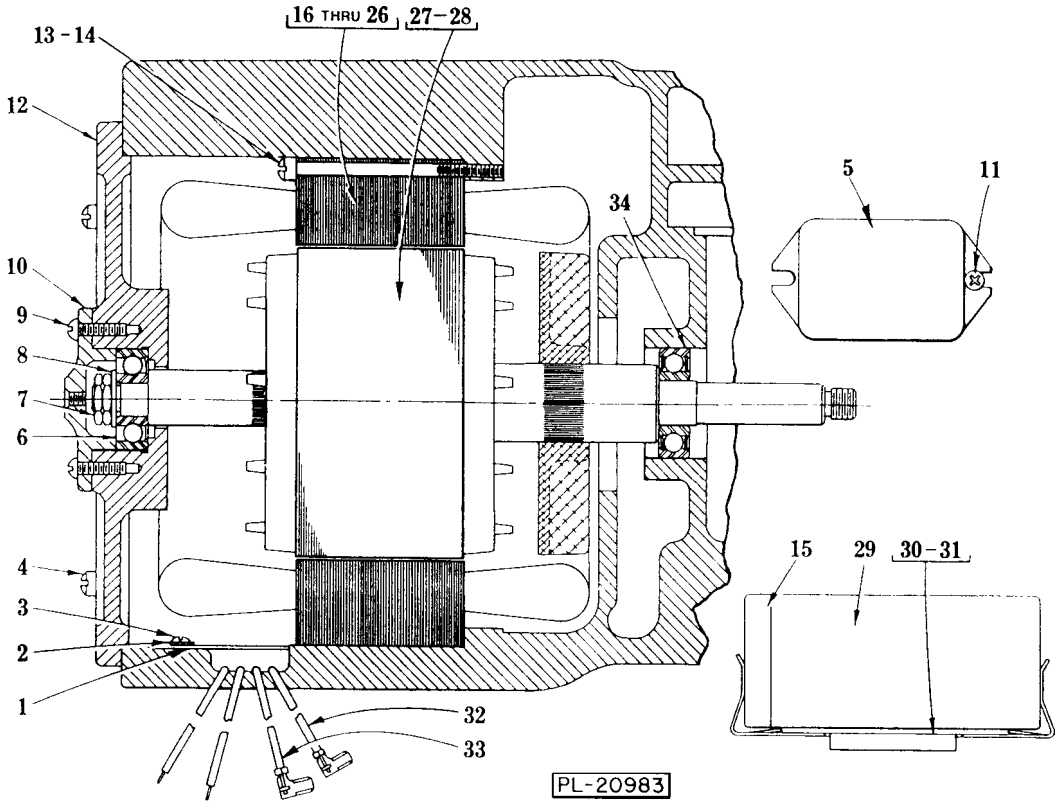
16 THRU 26
27-28
13-14
12
10
9
8
7
6
4
3
2
1
32
33
34
5
11
15
29
30-31
PL-20983

MOTOR PARTS

MOTOR PARTS

ILLUS. PL-20983D	PART NO.	NAME OF PART	AMT.
1	70441	Retainer - Lead Wire	1
2	WL-7-7	Lockwasher 8 External Shakeproof	1
3	SC-9-56	Mach. Screw 8-32 x 3/8 Rd. Hd	1
4	SC-11-64	Mach. Screw 12-24 x 1 Fil. Hd	4
5	271612-2	Switch - Electronic Start (50/60 Hz.) (1 Ph)	1
6	BB-21-25	Ball Bearing - NTN 6301-ZZ-C2-5C	1
7	11430	Nut - Special	2
8	WS-7-9	Washer	1
9	SC-9-61	Mach. Screw 8-32 x 1/2 Rd. Hd	4
10	70012	Cap - Bearing	1
11	SD-15-39	Self-Tapping Screw 8-32 x 1/4 Phil Pan Hd., Type TT (1 Ph)	2
12	68722-2	Bracket - Bearing	1
13	SC-11-32	Mach. Screw 10-24 x 3 Fil. Hd (1 Ph)	4
14	SC-11-28	Mach. Screw 10-24 x 2-1/2 Fil. Hd (3 Ph)	4
15	70486-2	Cap - Capacitor End (1 Ph)	1
16	65477-163-1	Stator Assy. (115 V., 60 Hz.) (1 Ph)	1
17	65477-163-2	Stator Assy.(200 V., 60 Hz.) (1 Ph)	1
18	65477-163-3	Stator Assy.(230 V., 60 Hz.) (1 Ph)	1
19	65477-163-4	Stator Assy.(115 V., 50 Hz.) (1 Ph)	1
20	65477-163-5	Stator Assy.(220 V., 50 Hz.) (1 Ph)	1
21	65478-29-1	Stator Assy.(200 V., 60 Hz.) (3 Ph)	1
22	65478-29-2	Stator Assy.(230 V., 60 Hz.) (3 Ph)	1
23	65478-29-3	Stator Assy.(460 V., 60 Hz.) (3 Ph)	1
24	65478-29-4	Stator Assy.(220 V., 50 Hz.) (3 Ph)	1
25	65478-29-5	Stator Assy.(380 V., 50 Hz.) (3 Ph)	1
26	65478-29-7	Stator Assy.(415 V., 50 Hz.) (3 Ph)	1
27	15747-219	Rotor Assy.(50/60 Hz.) (3 Ph)	1
28	22275-275	Rotor Assy.(50/60 Hz.) (1 Ph)	1
29	70487-1	Capacitor (1 Ph)	1
30	66621-1	Bracket - Capacitor (1 Ph)	1
31	SD-29-6	Self-Tapping Screw 10-24 x 1/2 Phil Flat Hd., Type F (1 Ph)	2
32	87525-635	Lead (Cap. to Start Switch)(7") (1 Ph)	1
33	87525-638	Lead (Cap. to Start Switch)(7") (1 Ph)	1
34	BB-18-17	Ball Bearing - Fafnir #H203PP	1
	ML-38942	Motor - Service (PTD)(Give Voltage)	1
	ML-38943	Motor - Service (Deluxe)(Give Voltage)	1

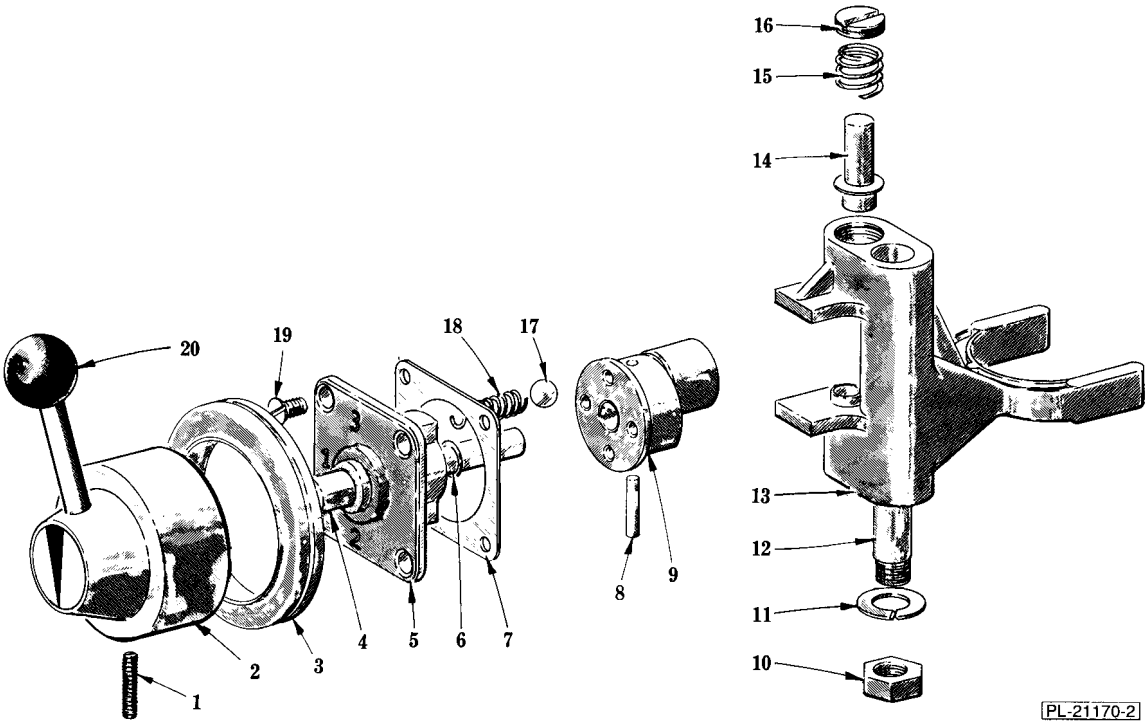

SHIFTER UNIT

SHIFTER UNIT

ILLUS. PL-21170-2	PART NO.	NAME OF PART	AMT.
1	SC-47-17	Set Screw 1/4-20 x 3/4 Soc. Hd., Cup Pt	1
2	291272	Shifter Handle Assy. (Incls. items 1 & 20)	1
3	110961	Grommet - Shifter Handle	1
4	114507	Shaft - Shifter	1
5	290115-2	Plate - Index	1
6	67500-44	"O" Ring	1
7	23946	Gasket - Index Plate	1
8	PS-3-8	Spirol Pin 1/8 Dia. x 3/4 Lg	1
9	00-114506	Cam - Gear Shifter	1
10	NS-13-22	Full Nut 3/8-16 Hex	1
11	WL-4-2	Lockwasher 3/8 Light	1
12	70043	Rod - Shifter Guide	1
13	13160	Yoke - Shifter	1
14	12733	Plunger - Shifter Yoke	2
15	12734	Spring - Shifter Yoke	2
16	12732	Retainer - Shifter Yoke Spring	2
17	BA-2-9	Ball 1/4 Dia	2
18	111170	Spring - Detent	2
19	SC-13-46	Mach. Screw 10-24 x 1/2 Flat Hd	4
20	00-70085	Knob - Shifter Handle Ball	1

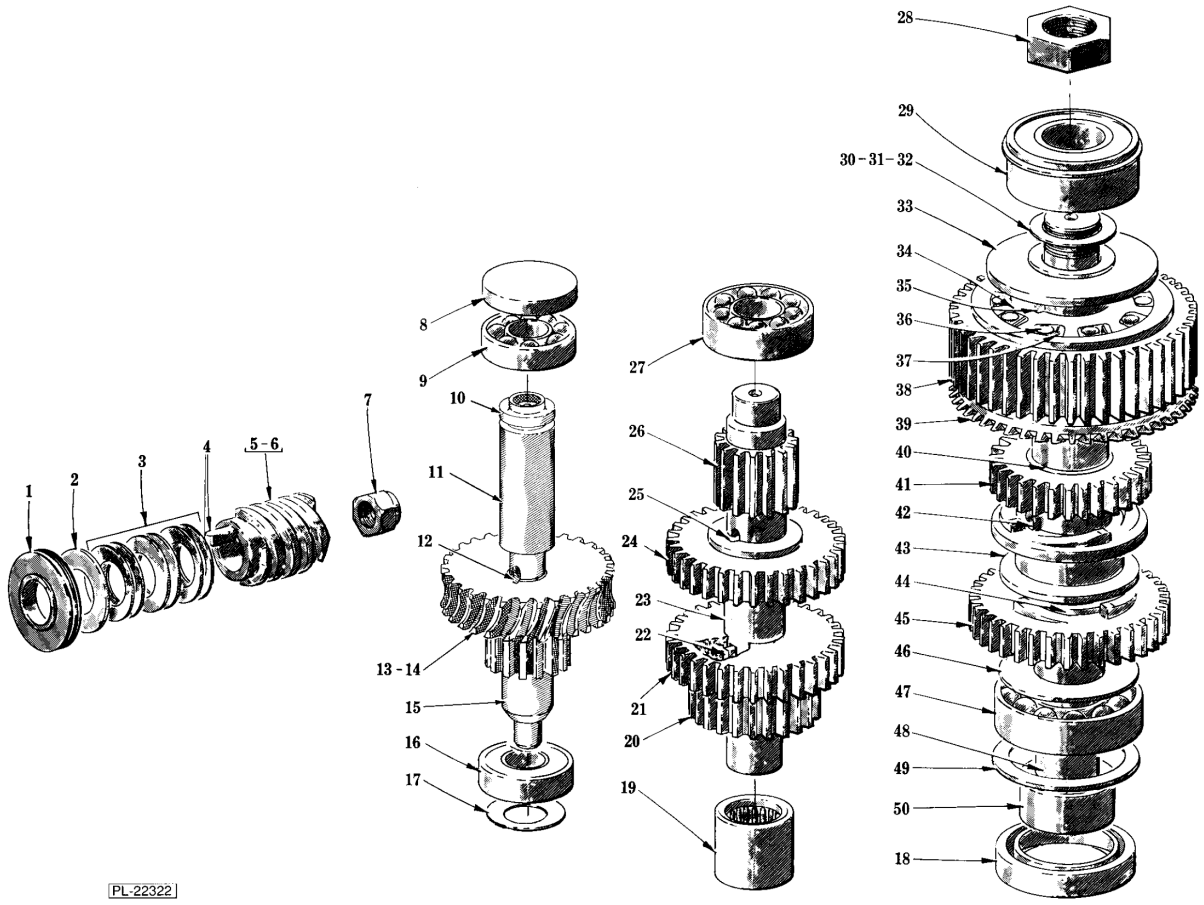

TRANSMISSION

TRANSMISSION

ILLUS. PL-22322	PART NO.	NAME OF PART	AMT.
1	13174-1	Deflector - Grease	1
2	WS-10-36	Washer	1
3	77840	Washer - Belleville	6
4	12747	Key	1
5	291221	Worm (5T)(60 Hz.)	1
6	70407	Worm (5T)(50 Hz.)	1
7	NS-32-23	Lock Nut 7/16-20 "Flexloc"	1
8	70026	Pusher - Bearing	1
9	BB-17-4	Ball Bearing - ND #7501	1
10	270526	Spacer	1
11	124765-3	Spacer - Gear	1
12	12430-49	Key	1
13	70034	Gear - Worm (29T)(60 Hz.)	1
14	70251	Gear - Worm (24T)(50 Hz.)	1
15	291130	Shaft - Worm Gear	1
16	BB-17-4	Ball Bearing - ND #7501	1
17	70166	Spring - Worm Shaft	1
18	110334	Seal - Planetary	1
19	BN-2-2	Needle Bearing	1
20	70028	Gear (23T)	1
21	70030	Gear (33T)	1
22	70260	Key	1
23	89829	Spacer	1
24	89831	Gear (32T)	1
25	89830	Key	1
26	89818	Shaft - Transmission	1
27	BB-17-9	Ball Bearing - MRC 2035-01-ST-E-92-C	1
28	NS-32-32	Stop Nut 3/4-16 L.H. Thd. "Flexloc"	1
29	BB-9-41	Ball Bearing - ND #45504	1
30	WS-12-45	Washer (.002" Thk.)	AR
31	WS-12-46	Washer (.003" Thk.)	AR
32	WS-12-47	Washer (.010" Thk.)	AR
33	70015	Spacer - Upper Planetary Shaft	1
34	70033	Sleeve - Drive	1
35	12430-161	Key	1
36	70039	Roller - Clutch	10
37	70055	Spring - Roller	10
38	70032	Gear - Roller Clutch (46T)	1
39	70020	Gear - Bevel (46T)	1
40	70042	Bushing - Upper Clutch Gear	1
41	70040	Gear - Upper Clutch (29T)	1
42	12430-55	Key 3/16 x 3/16 x 1	2
43	70035-1	Sleeve - Clutch	1
44	70031	Bushing - Lower Clutch Gear	1
45	124743	Gear - Lower Clutch (38T)	1
46	70046	Spacer - Lower Planetary Shaft	1
47	BB-8-33	Ball Bearing - Fafnir #205WD	1
48	71187	Planetary Shaft & Bushing Assy. (Incls. item 44)	1
49	70016	Spacer - Planetary	1
50	88774	NLA - Obsolete--Planetary Shaft & Gear Assy. (Incls. items 33,34,35,38 thru 47 & 48)	1
	270533-1	Worm Gear,Shaft & Bearing Assy.(60 Hz.) (Incls.items 9 thru 13,15 & 16)	1
	270533-2	Worm Gear,Shaft & Bearing Assy.(50 Hz.) (Incls.items 9,10,11,12,14,15 & 16)	1

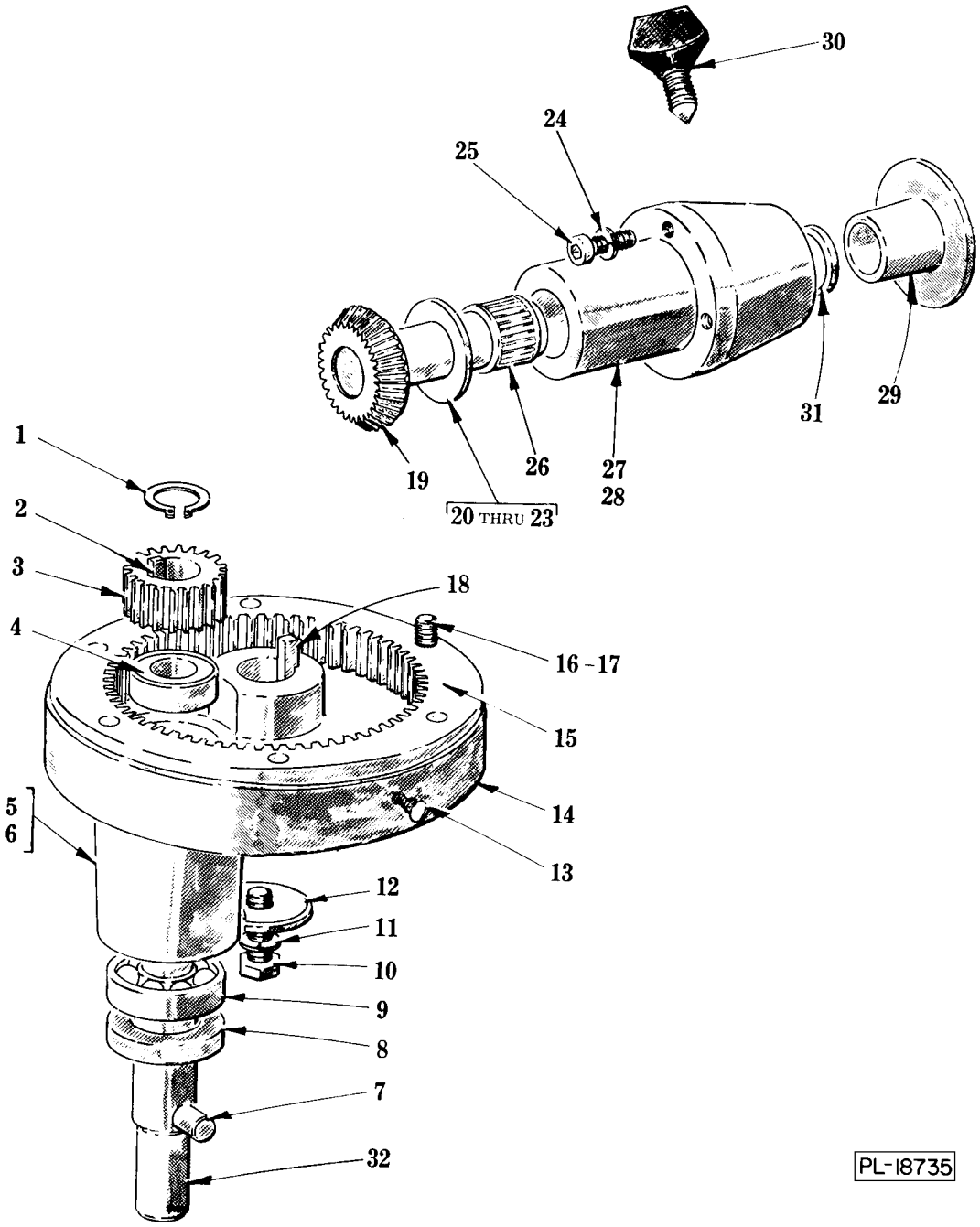

PLANETARY AND ATTACHMENT HUB

PLANETARY AND ATTACHMENT HUB

ILLUS. PL-18735D	PART NO.	NAME OF PART	AMT.
1	RR-4-6	Retaining Ring	1
2	12430-142	Key 1/4 sq. x 1 Lg	1
3	70014	Pinion - Agitator Shaft (18T)	1
4	BB-20-6	Ball Bearing - Fafnir 204KDFA51580	1
5	69990-1	Planetary (D300 & D300T)	1
6	69990-5	NLA - Obsolete--Planetary (D300D & D300DT)	1
7	70019	Pin - Agitator	1
8	110335	Seal - Agitator Shaft	1
9	BB-17-36	Ball Bearing - SKF #6205Z	1
10	SC-62-58	Cap Screw 3/8-24 x 1-1/4 Hex Hd	1
11	WL-6-27	Lockwasher 3/8 Light	1
12	70047-1	Washer - Planetary	1
13	70641-11	Thumb Screw 8-32 "Special"	2
14	437708	NLA - Obsolete--Cup - Planetary Drip	1
15	438472	Gear - Internal (59T)	1
16	SC-40-16	Cap Screw 5/16-18 x 1 Soc. Fil. Hd	6
17	WL-3-48	Lockwasher 5/16 High Collar	6
18	12430-158	Key 1/4 Sq. X 1-1/2 Lg	1
19	75393	NLA - Obsolete--Attach. Drive gear (35 T) & Expan. Plug Assy	1
20	70045-2	Washer - Thrust (.119" Thk.)	AR
21	70045-3	Washer - Thrust (.121" Thk.)	AR
22	70045-4	Washer - Thrust (.123" Thk.)	AR
23	70045-5	Washer - Thrust (.127" Thk.)	AR
24	WL-3-43	Lockwasher 5/16 Light	3
25	SC-40-15	Cap Screw 5/16-18 x 1-1/4 Soc. Fil. Hd	3
26	BN-2-12	Needle Bearing	2
27	70511-3	Attachment Hub & Bearings Assy. (Incls. item 26) (D300 & D300T)	1
28	70511-4	Attachment Hub & Bearings Assy. (Incls. item 26)(D300D & D300DT)	1
29	114824-1	Plug - attachment Hub	1
30	108197-1	Thumb Screw	1
31	70090	Seal - Attachment Hub	2
32	70339	Agitator shaft Assy. (Incls. item 7)	1
	88730-1	Planetary Assy.(Incls.items 1 thru 5, 8, 9 & 32) (D300 & D300T)	1
	88730-3	Planetary Assy.(Incls.items 1, 2, 3, 4, 6, 8, 9 & 32) (D300D & D300DT)	1

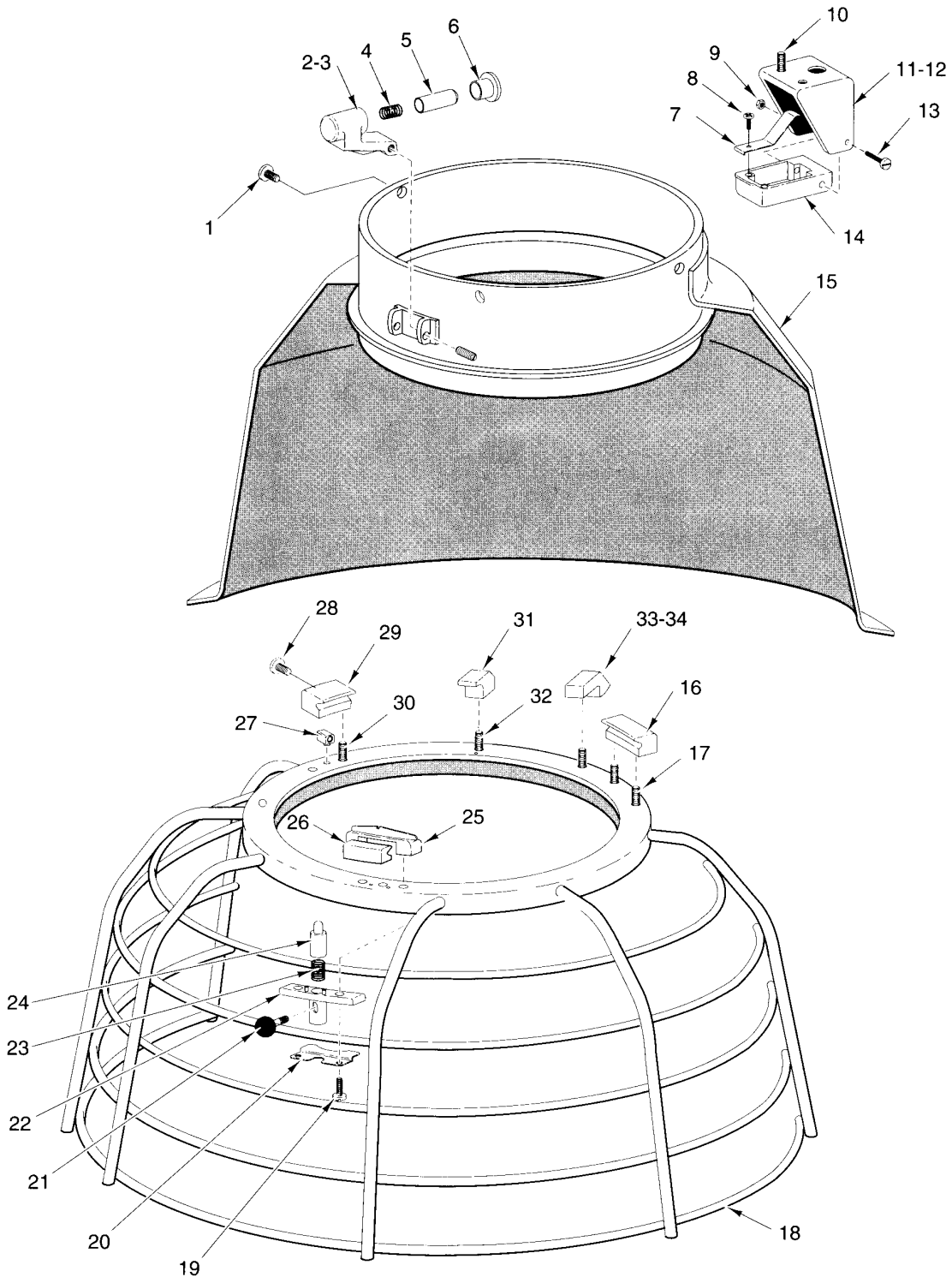

PL-51478

BOWL GUARD UNIT

BOWL GUARD UNIT

ILLUS. PL-51478	PART NO.	NAME OF PART	AMT.
1	70641-11	Thumb Screw 8-32 "Special"	3
2	437717-2	Latch - Cage Detent	1
3	437451	NLA - Obsolete--Set Screw - ""Special""	2
4	437446-1	Spring - Cage Detent	1
5	437724	Plunger - Detent	1
6	437725	Bushing - Detent	1
7	437815	Spring - Reed Switch	1
8	SC-18-50	Mach. Screw 6-32 x 1/4 Pan Hd	1
9	NS-48-11	Lock Nut 8 x 32	1
10	SC-68-14	Mach. Screw 8-32 x 3/8 Hex Hd	2
11	437728-4	Housing - Reed (Painted)	1
12	437728-5	Housing - Reed (Deluxe)	1
13	SC-122-48	Mach. Screw 8-32 x 1-3/4 Rd. Hd	1
14	87711-244	Housing - Reed Switch	1
15	437707	NLA - Obsolete--Splash Guard & Drip Cup Assy. (Painted)(Incls. items 2 & 3)	1
16	437713	Shoe - Fixed	1
17	SC-122-45	Mach. Screw - "Special" 1/4-20 x 3/8 Truss Hd	2
18	437819	NLA - Obsolete--Wire Cage Assy	1
19	SC-122-46	Mach. Screw - "Special" 1/4-20 x 3/4 Truss Hd	2
20	437817	Stop - Cage	1
21	437436	Pin - Plunger	1
22	437799	Housing - Plunger	1
23	437446-2	Spring - Cage On/Off	1
24	437432	Plunger	1
25	437718-2	Saddle - Shoe	1
26	437715	Shoe - Saddle	1
27	437720	Key - Shoe	1
28	SC-122-44	Mach. Screw 8-32 x 3/8 Slotted Truss Hd	1
29	437714	Shoe - Adjustable	1
30	SC-122-45	Mach. Screw - "Special" 1/4-20 x 3/8 Truss Hd	2
31	00-437816	Block - Rear Guide	1
32	SC-122-44	Mach. Screw 8-32 x 3/8 Slotted Truss Hd	1
33	437719	Retainer - Magnet	1
34	SC-122-44	Mach. Screw 8-32 x 3/8 Slotted Truss Hd	1
	438607	Ingredient Chute (Not Shown)	1

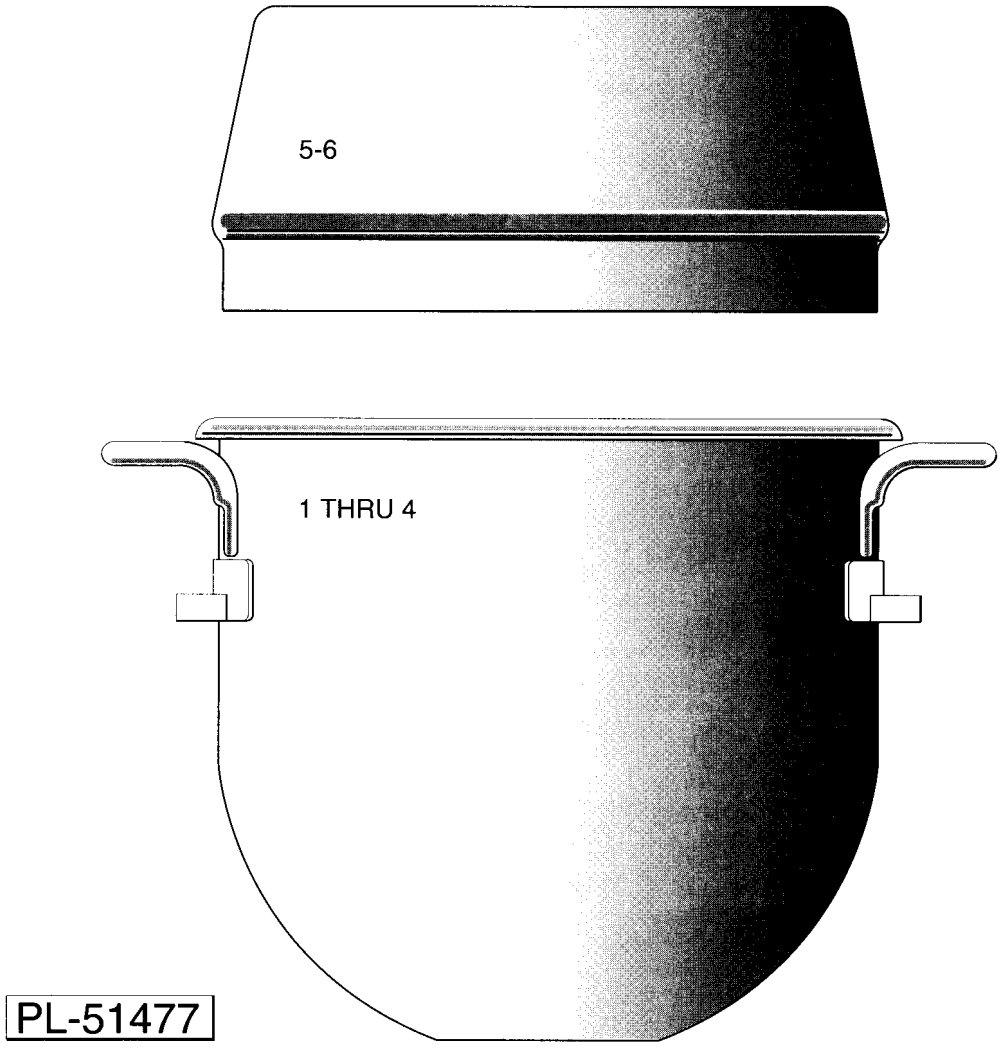

BOWL

BOWL

ILLUS. PL-51477D	PART NO.	NAME OF PART	AMT.
1	295649	Bowl - 30 Qt. (Tinned)	1
2	295646	Bowl - 20 Qt.(Not Shown)(Tinned)	1
3	437410	Bowl - 30 Qt.(SST)	1
4	295647	Bowl - 20 Qt.(SST)	1
5	438080	Splash Cover Assy. 30 Qt	1
6	438079	Splash Cover Assy. 20 Qt	1

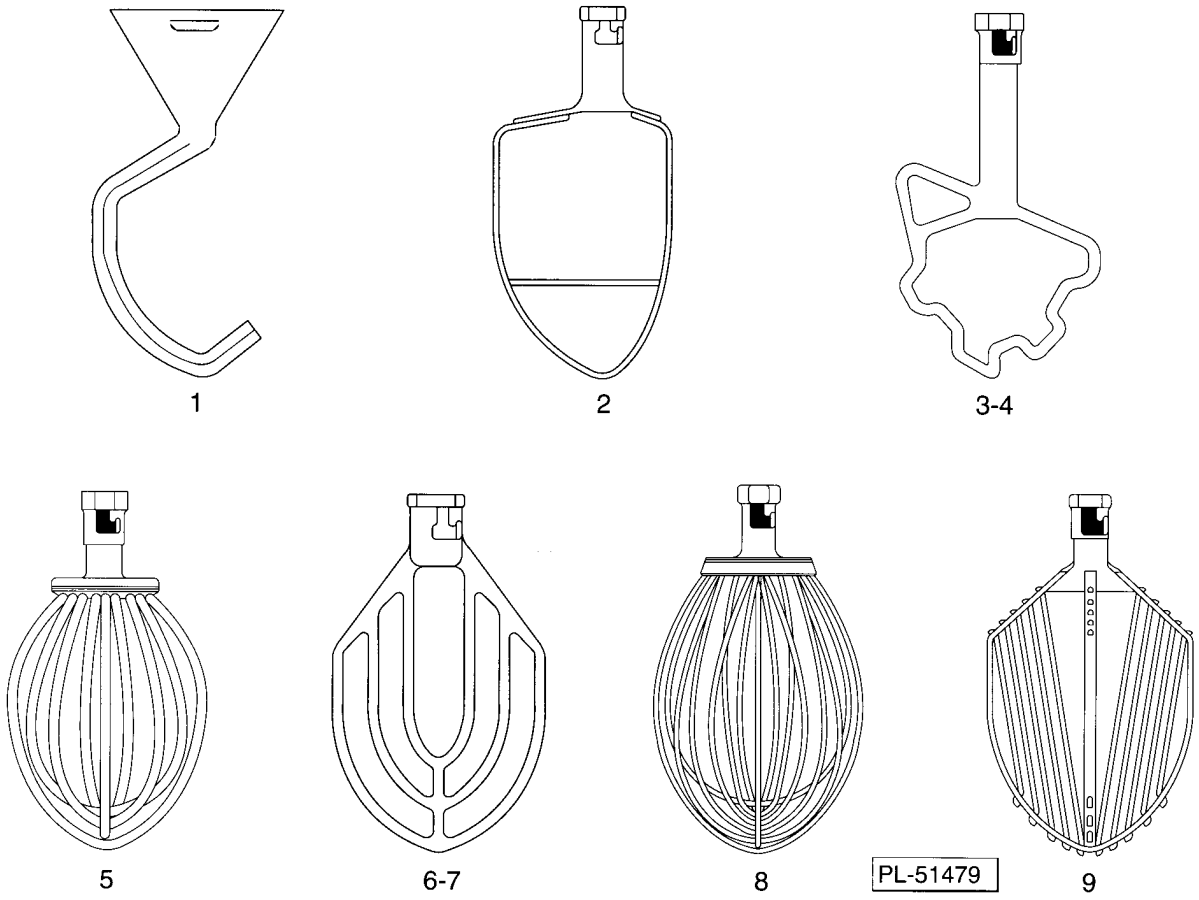

AGITATORS

AGITATORS

ILLUS. PL-51479	PART NO.	NAME OF PART	AMT.
1	295120	E Dough Arm (Alum.)(30 Qt)(20 Qt use 275465)	1
2	295037	P Pastry Knife(30 Qt)(20 Qt use 275467)	1
3	275463	S Sweet Dough Arm (Alum.)(30 Qt)	1
4	275464	NLA - Obsolete--S Sweet Dough Arm (Alum.)(30 Qt)	1
5	295163	I Wire Whip (SST.)(30 Qt)	1
6	275450	B Flat Beater (Alum.)(30 Qt)(20 Qt use 275461)	1
7	275451	B Flat Beater (SST.)(30 Qt)(20 Qt use 275462)	1
8	275899	D Wire Whip (SST.)(30 Qt)(20 Qt use 295029)	1
9	295161	C Wing Whip (30 Qt)(20 Qt use 295164)	1
	275889	ED Dough Arm - Spiral(30 Qt)(Not Shown)	1

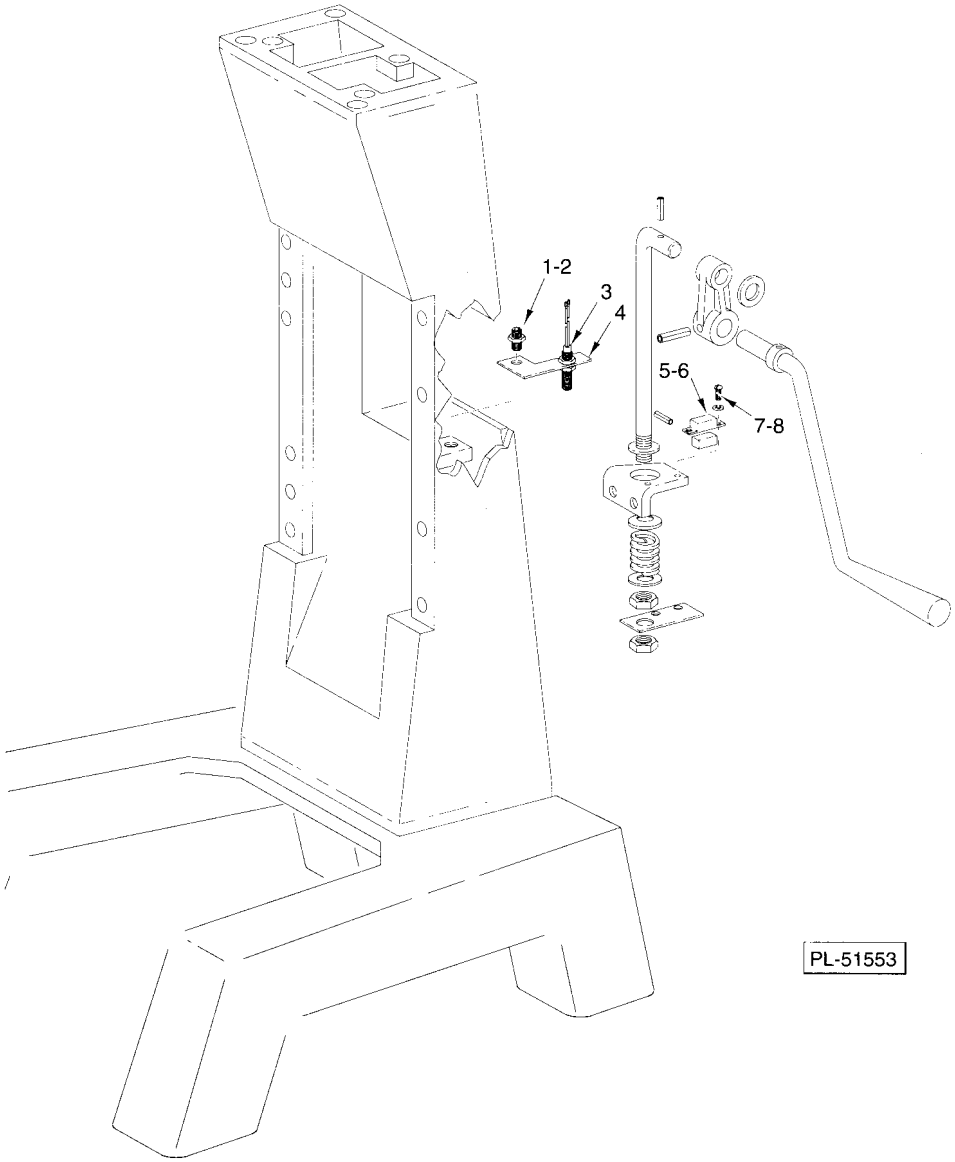

BOWL HEIGHT SENSING UNIT

BOWL HEIGHT SENSING UNIT

ILLUS. PL-51553	PART NO.	NAME OF PART	AMT.
1	SC-47-46	Set Screw 3/8-16 x 1-1/4 Soc. Hdls., Half-Dog Pt.	1
2	NS-17-15	Jam Nut 3/8-16 Hex	1
3	00-087711-306-1	Switch - Bowl Height Sensing	1
4	438387	Bracket - Bowl Height Sensor	1
5	120332	Retainer - Magnet	1
6	111941	Magnet	1
7	SC-21-1	Mach. Screw 4-40 x 1/4 Rd. Hd	1
8	WL-3-1	Lockwasher 4 Light	1