HOBART

CATALOG OF REPLACEMENT PARTS



D300 Series Mixers D300 Series Mixers (Includes the following MLs - 134258, 134261, 134211, 134213, 104421, 134114)

A product of HOBART 701 S. RIDGE AVENUE TROY, OHIO 45374-0001

FORM 43067 Rev. B (November 2016)

 © HOBART 2016

Table of Contents

5 MAGNETIC CONTROL UNIT
7 TIMER CONTROL AND SWITCH UNIT
9 BASE AND PEDESTAL (ML-104421 & ML-134114)
11 BASE AND PEDESTAL (ML-134211, ML-134213, ML-134258, & ML-134261)
13 BOWL LIFT UNIT
15 TRANSMISSION CASE
17 MOTOR PARTS (ML-104421 & ML-134114)
19 MOTOR PARTS (ML-134211, ML-134213, ML-134258, & ML-134261)
21 SHIFTER UNIT
23 TRANSMISSION
25 PLANETARY AND ATTACHMENT HUB
27 BOWL GUARD UNIT (PREVIOUS CONSTRUCTION)
29 BOWL GUARD UNIT (CURRENT CONSTRUCTION)
31 BOWL HEIGHT SENSING UNIT
33 BOWL
35 AGITATORS

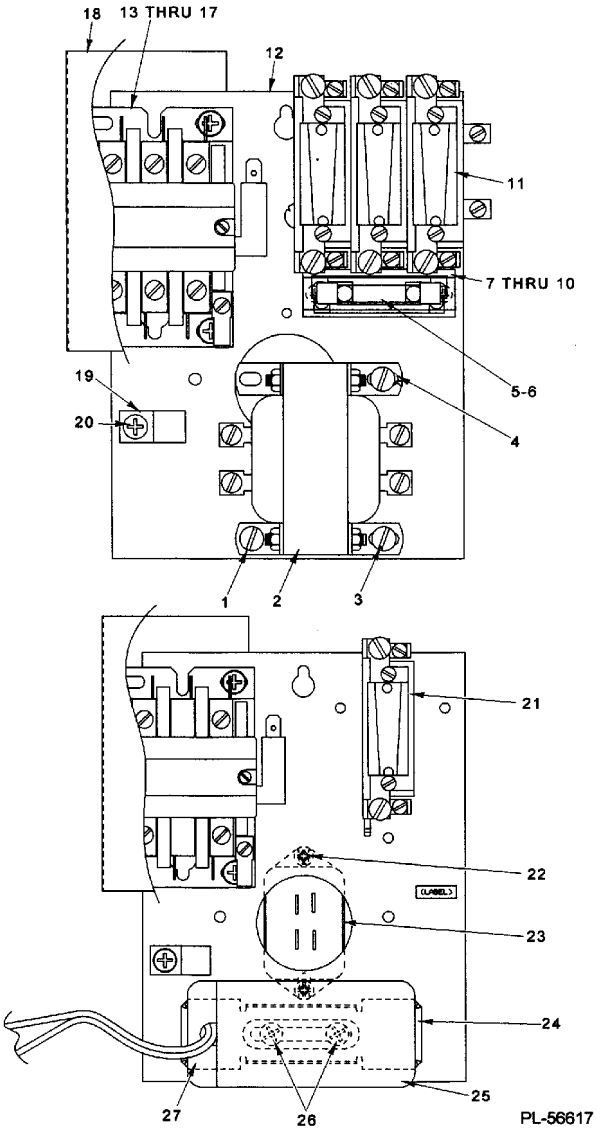

Heater Part No.	Motor Part No.	Machine Voltage Code	Machine Voltage	Freq. Hz.	Ph.	Hp.	Motor RPM	Amp. Rating	Overload Relay
112235-42	875386-1	A	115	60	1	3/4	1725	11.6	E-56
112235-35	875386-3	B	200	60	1	3/4	1725	6.3	E-48
112235-35	875386-1	C	230	60	1	3/4	1725	5.8	E-48
112235-26	875386-2	F	200	60	3	3/4	1725	2.5	E-36
112235-23	875386-4	G	230	60	3	3/4	1725	2.0	E-32
112235-16	875386-4	H	460	60	3	3/4	1725	1.0	E-23
112235-35	875386-1	M	220	50	1	3/4	1425	6.4	E-48
112235-23	875386-4	AB	200	50	3	3/4	1425	2.0	E-32

MAGNETIC CONTROL UNIT

MAGNETIC CONTROL UNIT

ILLUS. PL-56617	PART NO.	NAME OF PART	AMT.
1	SD-015-20	Self-Tapping Screw 10-32 x 3/8 Phil. Pan Hd., Type TT (Above 250 V.) (3 Ph.)	1
2	00-101935	Transformer (Above 250 V.)	1
3	SD-015-20	Self-Tapping Screw 10-32 x 3/8 Phil. Pan Hd., Type TT (Above 250 V.) (3 Ph.)	1
4	SD-015-20	Self-Tapping Screw 10-32 x 3/8 Phil. Pan Hd., Type TT (Above 250 V.) (3 Ph.)	1
5	FE-009-25	Fuse (0.5 Amp.) (Above 250 V.) (3 Ph.)	1
6	00-022376-00001	Fuse Holder	1
7	00-124017	Fuse Block Assy. (Above 250 V.) (3 Ph.)	1
8	00-085432	Insulator - Fuse Block (Above 250 V.) (3 Ph.)	1
9	SC-009-49	Mach. Screw 6-32 x 3/8 Slotted Rd. Hd	1
10	NS-009-07	Nut 6-32 Hex	1
11	00-088196-009-1	Relay - Thermal Overload (3 Ph.) Less Elements	1
12	00-271911	Panel - Control	1
13	00-087713-037-2	Contactor (115 V. Coil) (2 Pole)	1
14	00-087713-037-1	Contactor (220 V. Coil) (2 Pole)	1
15	00-087713-101-1	Contactor (200/300 V., 60 Hz.; 220 V., 50 Hz.) (3 Ph.) (3 Pole)	1
16	00-087713-101-2	Contactor (460 V., 60 Hz.; 380/415 V., 50 Hz.) (3 Ph.) (3 Pole)	1
17	SD-019-23	Self-Tapping Screw 10-16 x 3/8 Phil. Pan Hd., Type B	2
18	00-294815	Insulator	1
19	00-078752-00004	Clip - Wiring	1
20	SD-019-23	Self-Tapping Screw 10-16 x 3/8 Phil. Pan Hd., Type B	1
21	00-088196-006-1	Relay - Thermal Overload (1 Ph.)	1
22	SD-015-39	Self-Tapping Screw 8-32 x 1/4 Phil. Pan Hd., Type TT	2
23	00-271612-00002	Electronic Start Switch (1 Ph.)	1
24	00-066621-00001	Bracket (1 Ph.)	1
25	00-070487-00001	Capacitor (1 Ph.)	1
26	SD-029-06	Self-Tapping Screw 10-24 x 1/2 Phil. Flat Hd., Type F (SST)	2
27	00-070486-00002	Cap (1 Ph.)	1
	00-112235	Data Plate - Machine	AR
			AR

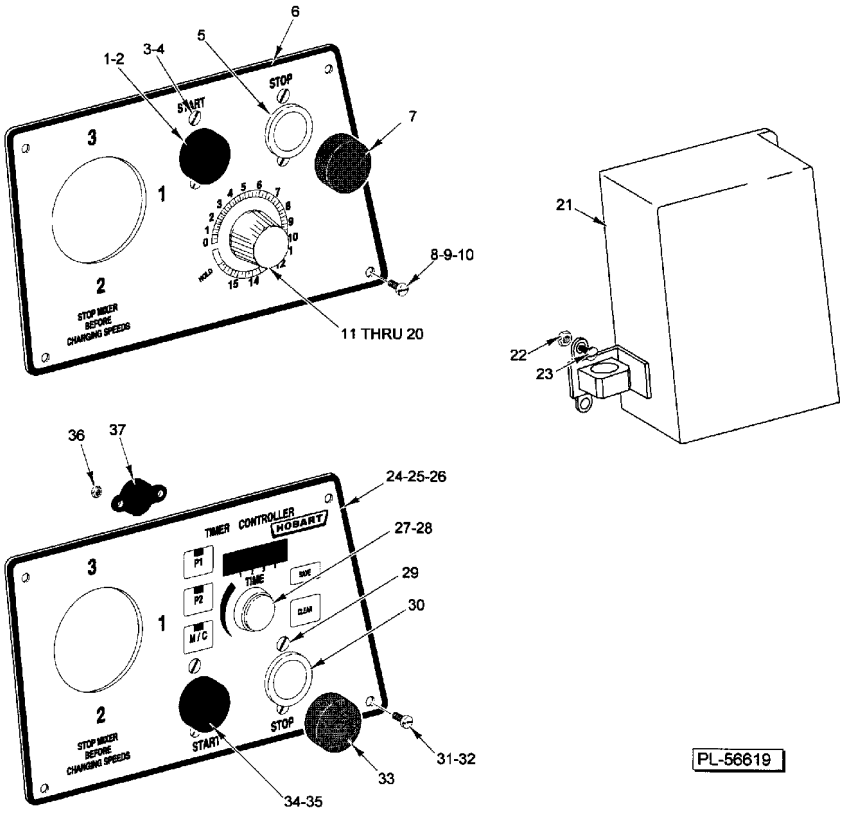

TIMER CONTROL AND SWITCH UNIT

TIMER CONTROL AND SWITCH UNIT

ILLUS. PL-56619	PART NO.	NAME OF PART	AMT.
1	00-087711-183-1	Switch - Push Button (N.O.) (Start)	1
2	00-102467-00001	Cap - Push Button (Start) (Black)	1
3	SC-013-12	Mach. Screw 6-32 x 1/4 Slotted Flat Hd. (ML-104421, ML-134211, & ML-134258)	4
4	SC-128-67	Mach. Screw 6-32 x 1/4 Tx. Flat Hd. (SST) (ML-134114, ML-134213, & ML-134261)	4
5	00-087711-183-2	Switch - Push Button (N.C.) (Stop)	1
6	00-291725	Plate - Switch & Timer	1
7	00-102467-00002	Cap - Push Button (Stop) (Red)	1
8	SD-024-01	Self-Tapping Screw 10-24 x 3/8 Slotted Pan Hd.,Type TT (MLs-104421,134211,& 134258)	4
9	SD-037-58	Self-Tapping Screw 10-24 x 3/8 Hex Button Hd.,Type F(SST)(MLs-134114,134213,& 134261)	4
10	WL-008-13	Lockwasher #10 Internal	4
11	00-291748	Knob - Timer	1
12	00-294650-004-1	Timer Assy. (115 V., 60 Hz.) (ML-134211, ML-134213, ML-134258, & ML-134261)	1
13	00-294650-004-2	Timer Assy. (200 V., 60 Hz.) (ML-134211, ML-134213, ML-134258, & ML-134261)	1
14	00-294650-004-4	Timer Assy. (200 V., 50 Hz.) (ML-134211, ML-134213, & ML-134258)	1
15	00-294650-004-5	Timer Assy.(115 V.,60Hz.)(Machine W/Pilot Circuit)(MLs-104421,134114,& 134211)	1
16	00-294650-004-6	Timer Assy. (230 V., 60 Hz.) (ML-104421, ML-134114, & ML-134211)	1
17	00-294650-004-7	Timer Assy. (115 V.,50Hz.)(Machine W/Pilot Circuit)(MLs-104421,134211,& 134114)	1
18	00-294650-004-8	Timer Assy. (220 V., 50 Hz.) (ML-104421, ML134114, ML-134211, & ML-134213)	1
19	SC-013-07	Mach. Screw 5-40 x 1/4 Slotted Flat Hd	2
20	00-291751	Insulation	1
21	00-437311	Cover & Hasp Assy. (Incls. Items 22 & 23) (ML-134114, ML-134213, ML-134261)	1
22	NS-032-01	Lock Nut 10-24 Hex (ML-134114, ML-134213, & ML-134261)	2
23	SC-121-94	Mach. Screw 10-24 x 3/8 Hex Button Head (SST) (ML-134114, ML-134213, & ML-134261)	2
24	00-439338	Switch Plate & Keypad Assy. (ML-104421 & ML-134211)	1
25	00-439400-00001	Board Assy. (120 V.) (ML-104421 & ML-134211)	1
26	00-439400-00002	Board Assy. (240 V.) (ML-104421 & ML-134211)	1
27	00-437775	Knob - Potentiometer (ML-104421 & ML-134211)	1
28	00-437742	Seal - Shaft (ML-104421 & ML-134211)	1
29	SC-053-38	Mach. Screw 6-32 x 1/4 Slotted Truss Hd. (SST) (ML-104421 & ML-134211)	4
30	00-087711-183-2	Switch - Push Button (N.C.) (Stop) (ML-104421 & ML-134211)	1
31	SD-024-01	Self-Tapping Screw 10-24 x 3/8 Slotted Pan Hd., Type TT (ML-104421 & ML-134211)	4
32	WL-008-13	Lockwasher #10 Internal (ML-104421 & ML-134211)	4
33	00-102467-00002	Cap - Push Button (Stop) (Red) (ML-104421 & ML-134211)	1
34	00-087711-183-1	Switch - Push Button (N.O.)	1
35	00-102467-00001	Cap - Push Button (Start) (Black) (ML-104421 & ML-134211)	1
36	NS-046-17	Stop Nut 4-40 Hex (ML-104421 & ML-134211)	2
37	00-438499-00002	Buzzer (ML-104421 & ML-134211)	1
	00-117542-00021	Cord & Plug (115 V.)	AR
	00-438074-00001	Snubber Assy	1

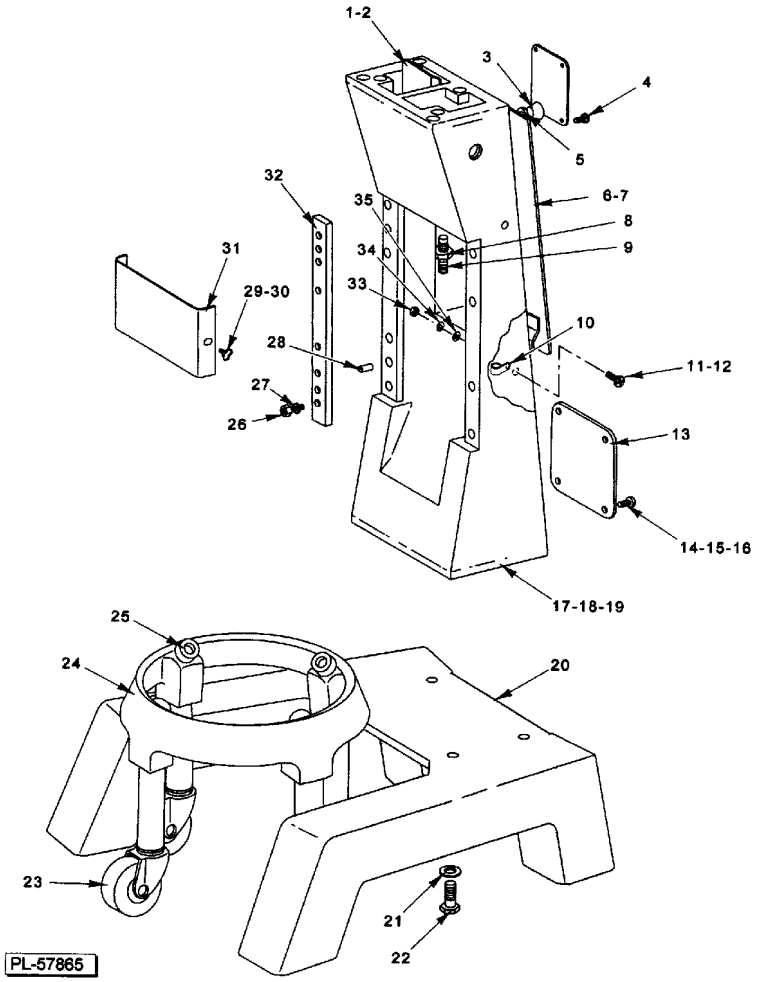

BASE AND PEDESTAL
(ML-104421 & ML-134114)

BASE AND PEDESTAL
(ML-104421 & ML-134114)

ILLUS. PL-57865	PART NO.	NAME OF PART	AMT.
1	00-070145	Air Baffle Assy	1
2	SC-013-55	Mach. Screw 10-24 x 1 Slotted Flat Hd	1
3	00-070450	Knob - Lift	1
4	00-121676-00003	Screw - Special	4
5	WS-019-26	Washer	1
6	00-070144-00001	Lift Access Cover Assy	1
7	00-123109	Screw 6-32 x 3/8 Serrated Hd	4
8	NS-017-15	Jam Nut 3/8-16 Hex	1
9	SC-047-46	Set Screw 3/8-16 x 1-1/4 Hex Hdls., Half Dog Pt	1
10	00-078752-00011	P-Clamp 3/16	2
11	SC-122-25	Mach. Screw 8-32 x 1 Phil. Pan Hd. (SST) (ML-104421)	2
12	SC-123-33	Mach. Screw 8-32 x 1 Hex Button Hd. (SST) (ML-134114)	2
13	00-123969-00001	Cover & Gasket Assy. (Capacitor & Starter Access)	1
14	00-123109	Screw 6-32 x 3/8 Serrated Hd. (ML-104421)	4
15	SC-121-90	Mach. Screw 6-32 x 3/8 Hex Button Hd. (SST) (ML-134114)	4
16	WL-013-05	Lockwasher #6 Internal (SST)	4
17	00-123961-00004	Pedestal	1
18	SD-024-01	Self-Tapping Screw 10-24 x 3/8 Slotted Pan Hd., Type TT	1
19	WL-010-06	Lockwasher #10 External Shakeproof (Bronze)	1
20	00-110146-00002	Base Assy	1
21	WS-018-19	Washer	4
22	SC-097-53	Cap Screw 3/8-16 x 2-1/4 Hex Hd	4
23	00-087668-00002	Caster	4
24	00-875748	Bowl Truck Assy. (Incls. Items 23 & 25)	1
25	00-018682-00001	Foot	4
26	SC-040-14	Cap Screw 5/16-18 x 3/4 Hex Soc. Hd	8
27	WL-003-48	Lockwasher 5/16 High Collar	8
28	00-011800-00116	Dowel	2
29	00-070641-00011	Thumb Screw 8-32 Special (ML-104421)	2
30	SC-121-92	Mach. Screw 8-32 x 3/8 Hex Button Hd. (SST) (ML-134114)	2
31	00-437723	Apron	1
32	00-068717	Slideway	2
33	NS-009-12	Nut 8-32 Hex	2
34	WL-007-07	Lockwasher #8 External	2
35	WS-019-16	Washer	2
	00-477597	Feet Kit (Set of 4) (SST)	1
	00-315139	Deck Plate Kit	1

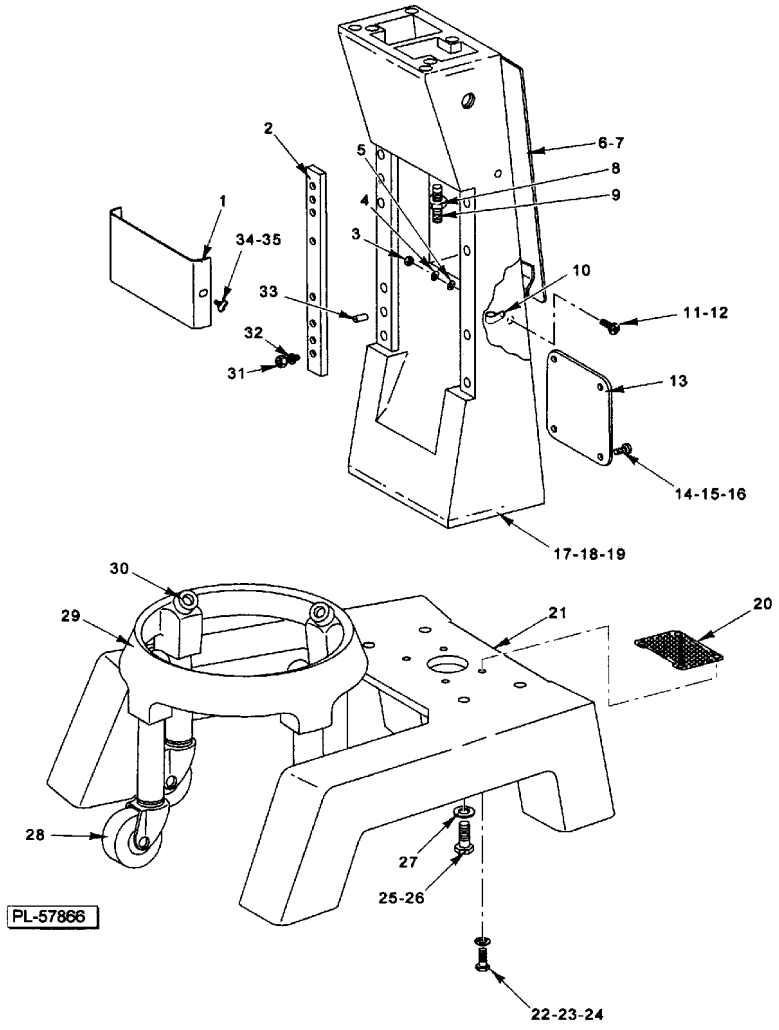

BASE AND PEDESTAL
(ML-134211, ML-134213, ML-134258, & ML-134261)

BASE AND PEDESTAL
(ML-134211, ML-134213, ML-134258, & ML-134261)

ILLUS. PL-57866	PART NO.	NAME OF PART	AMT.
1	00-437723	Apron	1
2	00-068717	Slideway	2
3	NS-009-12	Nut 8-32 Hex	2
4	WL-007-07	Lockwasher #8 External	2
5	WS-019-16	Washer	2
6	00-070144-00001	Lift Access Cover Assy	1
7	00-123109	Screw 6-32 x 3/8 Serrated Hd	4
8	NS-017-15	Jam Nut 3/8-16 Hex	1
9	SC-047-46	Set Screw 3/8-16 x 1-1/4 Hex Hdls., Half Dog Pt	1
10	00-078752-00011	P-Clamp 3/16	2
11	SC-122-25	Mach. Screw 8-32 x 1 Phil. Pan Hd. (SST)	2
12	SC-128-78	NLA - Obsolete--Mach. Screw 8-32 x 1 Tx. Button Hd. (SST) (ML-134213 & ML-134261)	2
13	00-123969-00001	Cover & Gasket Assy. (Capacitor & Starter Access)	1
14	00-123109	Screw 6-32 x 3/8Serrated Hd. (ML-134211 & ML-134258)	4
15	SC-128-68	Mach. Screw 6-32 x 3/8 Tx. Button Hd. (SST) (ML-134213 & ML-134261)	4
16	WL-013-05	Lockwasher #6 Internal (SST)	4
17	00-123961-00004	Pedestal	1
18	SD-024-01	Self-Tapping Screw 10-24 x 3/8 Slotted Pan Hd., Type TT	1
19	WL-010-06	Lockwasher #10 External Shakeproof (Bronze)	1
20	00-108159	Screen - Air	1
21	00-875590-00003	Base Assy	1
22	WS-018-19	Washer	4
23	SC-118-10	Cap Screw 3/8-16 x 1 Hex Hd	4
24	00-512987	Adhesive	AR
25	SC-118-09	Cap Screw 3/8-16 x 1-1/4 Hex Hd	4
26	00-512987	Adhesive	AR
27	WS-018-19	Washer	4
28	00-087668-00002	Caster	4
29	00-875748	Bowl Truck Assy. (Incls. Items 28 & 30)	1
30	00-018682-00001	Foot	4
31	SC-040-14	Cap Screw 5/16-18 x 3/4 Hex Soc. Hd	8
32	WL-003-48	Lockwasher 5/16 High Collar	8
33	00-011800-00116	Dowel	2
34	00-070641-00011	Thumb Screw 8-32 Special (ML-134211 & ML-134258)	2
35	SC-128-73	Mach. Screw 8-32 x 1/4 Tx. Button Hd. (SST) (ML-134213 & ML-134261)	2
	00-477597	Feet Kit (Set of 4) (SST)	1
	00-315139	Deck Plate Kit	1

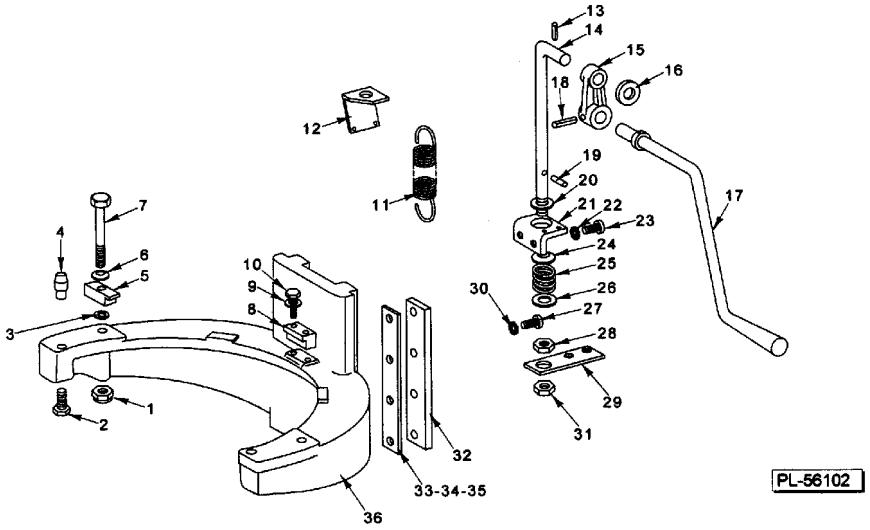

BOWL LIFT UNIT

BOWL LIFT UNIT

ILLUS. PL-56102	PART NO.	NAME OF PART	AMT.
1	NS-036-19	Stop Nut 5/16-18 Hex Hd. (SST)	2
2	SC-037-75	Cap Screw 5/16-18 x 3/4 Hex Hd	2
3	WS-004-18	Washer	2
4	00-070411	Pin - Bowl Locating	2
5	00-070057	Clamp - Bowl	2
6	00-070087	Washer - Spring	2
7	SC-062-28	Cap Screw 5/16-18 x 3 1/2 Hex Hd	2
8	00-070044	Retainer - Bowl	1
9	WL-006-16	Lockwasher 1/4 Light (SST)	2
10	SC-036-09	Cap Screw 1/4-20 x 1-1/4 Hex Hd	2
11	00-023884	Spring - Counterbalance	2
12	00-070056	Bracket - Upper Spring Lift	1
13	RP-002-25	Roll Pin 1/8 Dia. x 7/8 Lg	1
14	00-068718	Rod - Bowl Lift	1
15	00-069995	Arm - Bowl Lift	1
16	WS-008-47	Washer	1
17	00-293564	Lift Handle Assy	1
18	RP-002-26	Roll Pin 1/4 Dia. x 1 1/8 Lg	1
19	RP-002-10	Roll Pin 3/16 Dia. x 1 Lg	1
20	WS-008-47	Washer	1
21	00-438474	Bracket - Bowl Lift	1
22	WL-009-14	Lockwasher 5/16 External Shakeproof	2
23	SC-061-03	Cap Screw 5/16-18 x 3/4 Soc. Flat Hd	2
24	00-070131	Washer - Cup	1
25	00-070104	Spring - Bowl Lift	1
26	WS-008-47	Washer	1
27	SC-061-03	Cap Screw 5/16-18 x 3/4 Soc. Flat Hd	8
28	NS-017-31	Jam Nut 1/2-20 Hex	1
29	00-070058	Bracket - Lower Spring Lift	1
30	WL-009-14	Lockwasher 5/16 External Shakeproof	8
31	NS-017-31	Jam Nut 1/2-20 Hex	1
32	00-069996	Gib	2
33	00-070092-00001	Shim - Bowl Support (0.001 Thk.)	AR
34	00-070092-00002	Shim - Bowl Support (0.002 Thk.)	AR
35	00-070092-00003	Shim - Bowl Support (0.003 Thk.)	AR
36	00-069987-00002	Support - Bowl	1

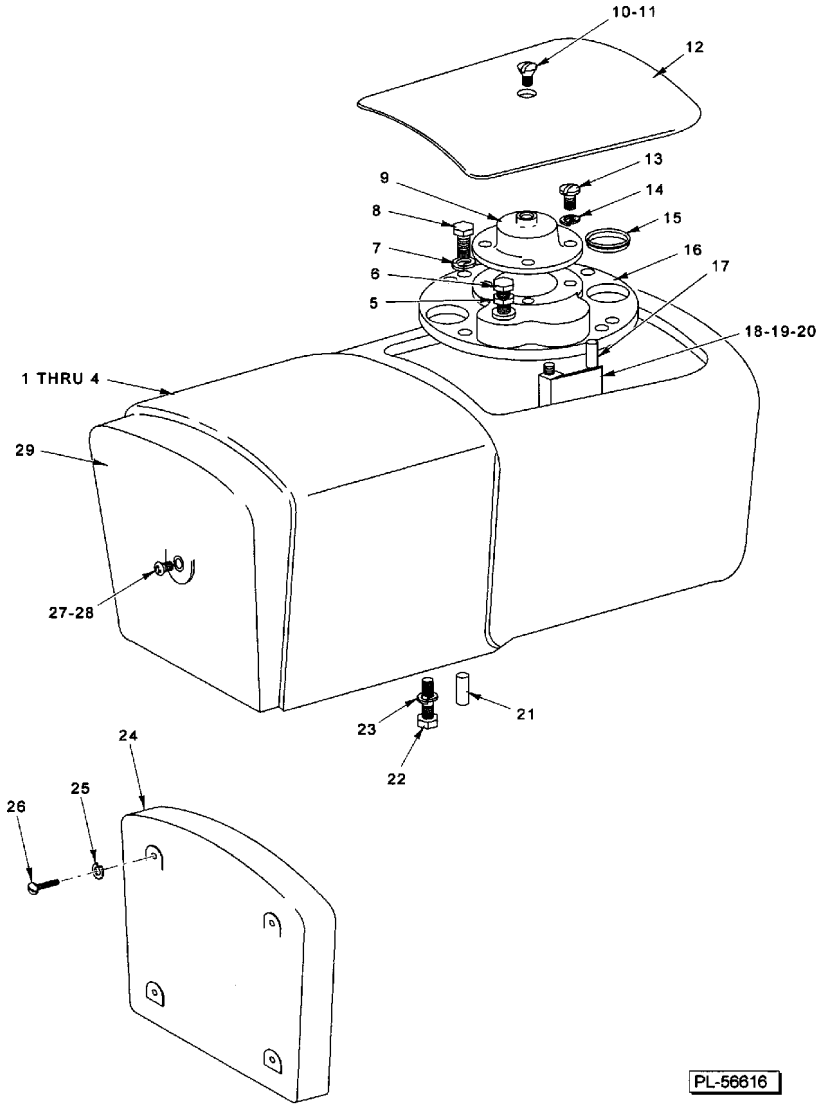

TRANSMISSION CASE

TRANSMISSION CASE

ILLUS. PL-56616	PART NO.	NAME OF PART	AMT.
1	00-290505-00001	Case - Transmission (ML-104421 & ML-134114)	1
2	00-874100-00002	Case - Transmission (ML-134211 & ML-134213)	1
3		Motor (ML-104421 & ML-134114) (See page 17)	1
4		Motor (ML-134211, ML-134213, ML-134258, & ML-134261) (See Page 19)	1
5	NS-017-16	Jam Nut 3/8-16 Hex	1
6	SC-118-09	Cap Screw 3/8-16 x 1-1/4 Hex Hd	1
7	WL-003-43	Lockwasher 5/16 Light	4
8	SC-124-14	Cap Screw 5/16-18 x 7/8 Hex Hd	4
9	00-070017	Retainer - Bearing	1
10	SC-015-36	Mach. Screw 10-24 x 5/8 Oval Hd. (ML-104421, ML-134211, & ML-134258)	1
11	SC-128-75	Mach. Screw 10-24 x 5/8 Tx. Flat Hd. (SST) (ML-134114, ML-134213, & ML-134261)	1
12	00-070005-00001	Transmission Case Cover Assy	1
13	SC-011-74	Mach. Screw 1/4-20 x 5/8 Slotted Fil. Hd	4
14	WL-003-37	Lockwasher 1/4	4
15	00-064871	Plug - Friction	2
16	00-068721	Bearing Carrier - Transmission Case	1
17	00-011800-00116	Dowel	2
18	00-070872	Deflector - Roller Clutch Oil	1
19	SC-009-82	Mach. Screw 8-32 x 5/16 Slotted Rd. Hd	1
20	WL-007-06	Lockwasher #8 External Shakeproof	2
21	00-270777	Dowel	2
22	SC-006-27	Cap Screw 3/8-16 x 1 3/4 Hex Hd	4
23	WL-006-27	Lockwasher 3/8 Light (SST)	4
24	00-479497-00003	Cap - Trim (ML-134211, ML-134213, ML-134258, & ML-134261)	1
25	WL-019-79	Lockwasher #12 Helical	4
26	SC-128-45	Mach. Screw 12-24 x 2 Slotted Pan Hd	4
27	SC-113-52	Mach. Screw 10-24 x 1/2 Phil. Truss Hd. (SST) (ML-104421)	1
28	SC-121-97	Mach. Screw 10-24 x 3/4 Hex Button Hd. (SST) (ML-134114)	1
29	00-437918-00006	Cap - Trim (ML-104421 & ML-134114)	1
	00-079621	Shim (Between Transmission Case & Pedestal)	AR

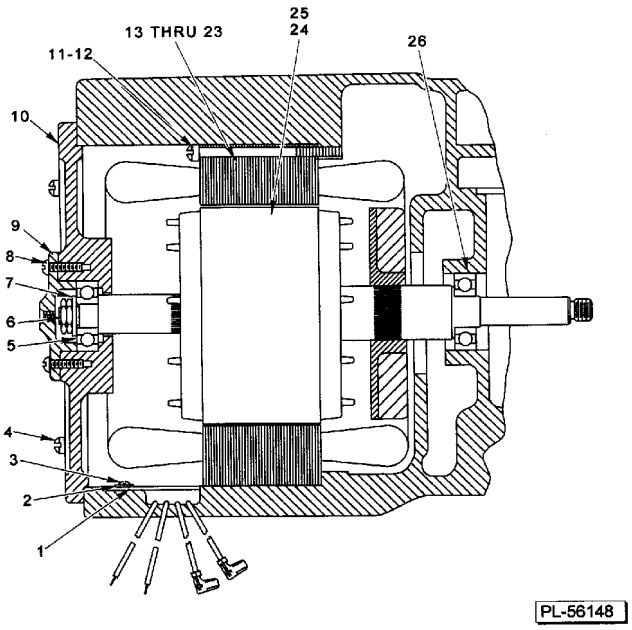

MOTOR PARTS
(ML-104421 & ML-134114)

MOTOR PARTS
(ML-104421 & ML-134114)

ILLUS. PL-56148	PART NO.	NAME OF PART	AMT.
1	00-070441	Retainer - Lead Wire	1
2	WL-007-07	Lockwasher #8 External Shakeproof	1
3	SC-009-56	Mach. Screw 8-32 x 3/8 Slotted Rd. Hd	1
4	SC-011-64	Mach. Screw 12-24 x 1 Slotted Fil. Hd	4
5	BB-021-25	Ball Bearing - NTN 6301-ZZ-C2-5C	1
6	00-011430	Nut - Special	2
7	WS-007-09	Washer	1
8	SC-009-61	Mach. Screw 8-32 x 1/2 Slotted Rd. Hd	4
9	00-070012	Cap - Bearing	1
10	00-068722-00002	Bracket - Bearing	1
11	SC-011-32	Mach. Screw 10-24 x 3 Slotted Fil. Hd. (Use With 1 Ph. Motors)	4
12	SC-011-28	Mach. Screw 10-24 x 2 1/2 Slotted Fil. Hd. (Use With 3 Ph. Motors)	4
13	00-065477-163-1	Stator Assy. (115 V., 60 Hz., 1 Ph.)	1
14	00-065477-163-2	Stator Assy. (200/208 V., 60 Hz., 1 Ph.)	1
15	00-065477-163-3	Stator Assy. (230 V., 60 Hz., 1 Ph.)	1
16	00-065477-163-4	Stator Assy. (115 V., 50 Hz., 1 Ph.)	1
17	00-065477-163-5	Stator Assy. (220 V., 50 Hz., 1 Ph.)	1
18	00-065478-029-1	Stator Assy. (200/208 V., 60 Hz., 3 Ph.)	1
19	00-065478-029-2	Stator Assy. (230 V., 60 Hz., 3 Ph.)	1
20	00-065478-029-3	Stator Assy. (460 V., 60 Hz., 3 Ph.)	1
21	00-065478-029-4	Stator Assy. (220 V., 50 Hz., 3 Ph.)	1
22	00-065478-029-5	Stator Assy. (380 V., 50 Hz., 3 Ph.)	1
23	00-065478-029-7	Stator Assy. (415 V., 50 Hz., 3 Ph.)	1
24	00-015747-00219	Rotor Assy. (50/60 Hz., 3 Ph.)	1
25	00-022275-00275	Rotor Assy. (50/60 Hz., 1 Ph.)	1
26	BB-018-17	Ball Bearing - Fafnir #H203PP	1

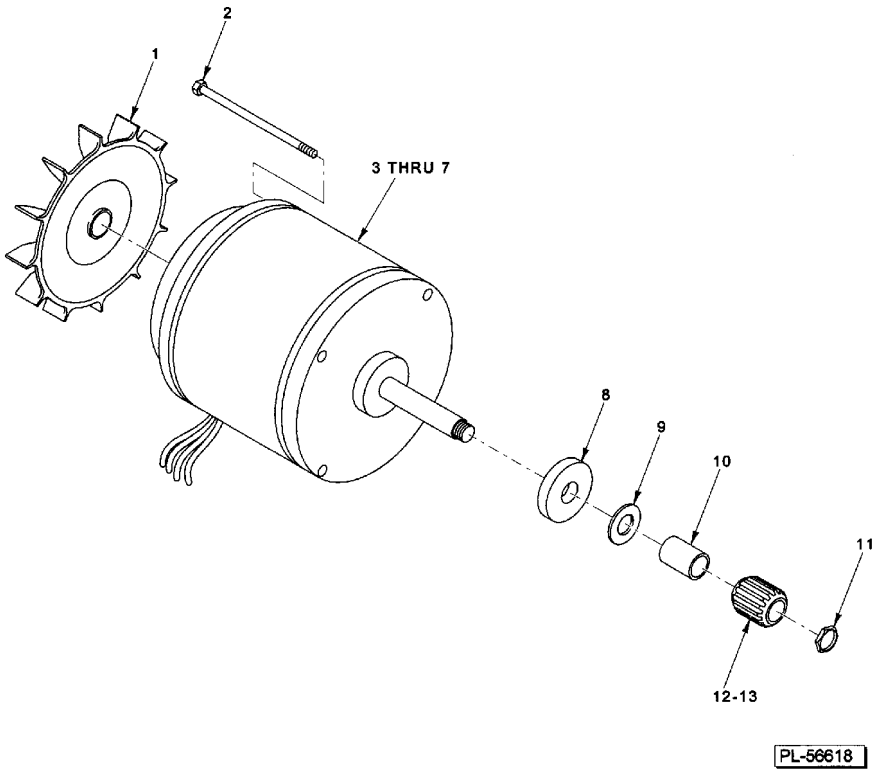

MOTOR PARTS
(ML-134211, ML-134213, ML-134258, & ML-134261)

MOTOR PARTS
(ML-134211, ML-134213, ML-134258, & ML-134261)

ILLUS. PL-56618	PART NO.	NAME OF PART	AMT.
1	00-437288	Fan and Clip	1
2	SC-110-83	Mach. Screw 10-32 x 7 5/8 Hex Hd	4
3	00-875386-00001	Motor (120-240 V., 60 Hz., 1 Ph.)	1
4	00-875386-00001	Motor (220 V., 50 Hz., 1 Ph.)	1
5	00-875386-00002	Motor (200-208 V., 60 Hz., 3 Ph.)	1
6	00-875386-00003	Motor (200-208 V., 60 Hz., 1 Ph.)	1
7	00-875386-00004	Motor (240-460 V., 60 Hz., 3 Ph.)	1
8	00-873057	Grease Deflector	1
9	00-077840	Washer - Belleville	6
10	00-875517	Spacer	1
11	NS-032-23	Lock Nut Special 7/16-20 Flexloc	1
12	00-291221	Gear - Worm (60 Hz.)	1
13	00-070407	Gear - Worm (50 Hz.)	1
	00-012747	Key - Worm Gear	1

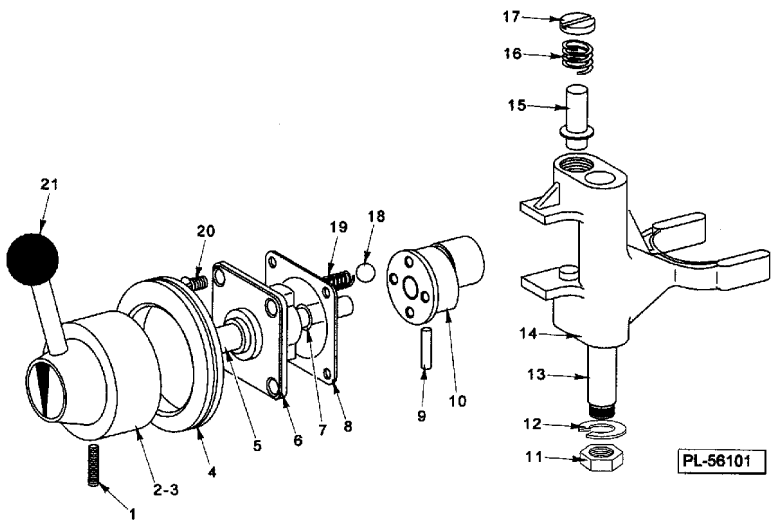

SHIFTER UNIT

SHIFTER UNIT

ILLUS. PL-56101	PART NO.	NAME OF PART	AMT.
1	SC-047-17	Set Screw 1/4-20 x 3/4 Hdls., Cup Pt.	1
2	00-291272	Shifter Handle Assy. (Incls. Items 1 & 21) (ML-104421, ML-134211, & ML-134258)	1
3	00-439306	Shifter Handle Assy.(Pinned)(Incls. Items 1 & 21)(ML-134114, ML-134213, & ML-134261)	1
4	00-110961	Grommet - Shifter Handle	1
5	00-875238	Shaft - Shifter	1
6	00-290115-00001	Plate - Index	1
7	00-067500-00044	O-Ring	1
8	00-023946	Gasket - Index Plate	1
9	PS-003-08	Spiral Pin 1/8 Dia. x 3/4 Lg	1
10	00-873504	Cam - Gear Shifter	1
11	NS-013-22	Nut 3/8-16 Hex	1
12	WL-004-06	Lockwasher 3/8 Helical	1
13	00-070043	Rod - Shifter Guide	1
14	00-013160	Yoke - Shifter	1
15	00-012733	Plunger - Shifter Yoke	2
16	00-012734	Spring - Shifter Yoke	2
17	00-012732	Retainer - Shifter Yoke Spring	2
18	BA-002-09	Ball 1/4 Dia.	2
19	00-111170	Spring - Detent	2
20	SC-014-57	Mach. Screw 10-24 x 1/2 Slotted Flat Hd	4
21	00-070085	Knob - Shifter Handle Ball	1
	00-875240	Shifter Sub-Assy. (Incls. Items 5 thru 10, 18, & 19)	1

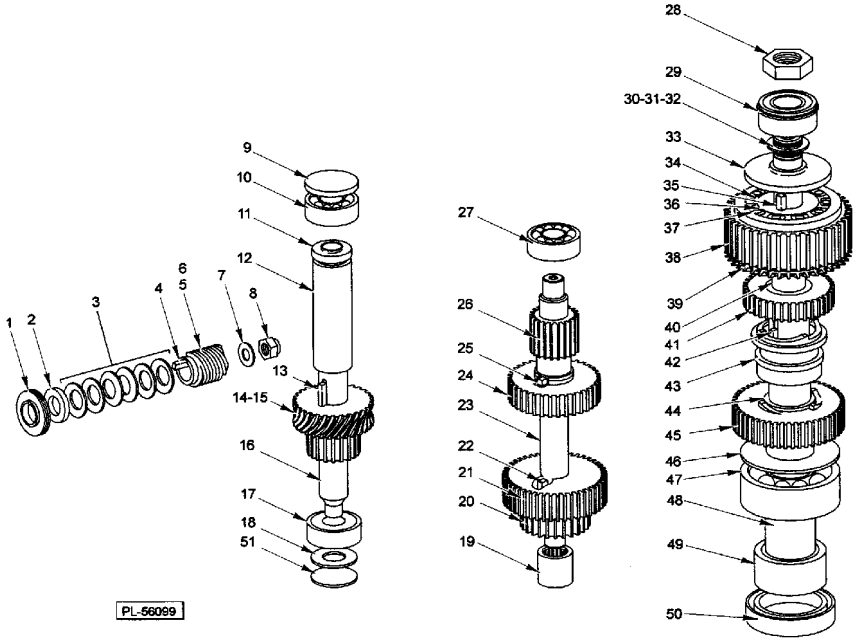

TRANSMISSION

TRANSMISSION

ILLUS. PL-56099	PART NO.	NAME OF PART	AMT.
1	00-013174-00001	Deflector - Grease (ML-104421 & ML-134114)	1
2	WS-010-36	Washer (ML-104421 & ML-134114)	1
3	00-077840	Washer - Belleville (ML-104421 & ML-134114)	6
4	00-478601	Key (ML-104421 & ML-134114)	1
5	00-291221	Worm (5T) (60 Hz.) (ML-104421 & ML-134114)	1
6	00-070407	Worm (5T) (50 Hz.) (ML-104421 & ML-134114)	1
7	WS-007-09	Washer (ML-104421 & ML-134114)	1
8	NS-032-23	Lock Nut 7/16-20 Flexloc (ML-104421 & ML-134114)	1
9	00-070026	Pusher - Bearing	1
10	BB-017-04	Ball Bearing - ND #7501	1
11	00-270526	Spacer	1
12	00-124765-00003	Spacer - Gear	1
13	00-012430-00049	Key	1
14	00-070034	Gear - Worm (29T) (60 Hz.)	1
15	00-070251	Gear - Worm (24T) (50 Hz.)	1
16	00-291130	Shaft - Worm Gear	1
17	BB-017-04	Ball Bearing - ND #7501	1
18	00-070166	Spring - Worm Shaft	1
19	BN-002-02	Needle Bearing	1
20	00-070028	Gear (23T)	1
21	00-070030	Gear (33T)	1
22	00-875419-00060	Key	1
23	00-089829	Spacer	1
24	00-089831	Gear (32T)	1
25	00-875419-00053	Key	1
26	00-875435	Shaft - Transmission	1
27	BB-017-09	Ball Bearing - MRC 2035-01-ST-E-92-C	1
28	NS-032-32	Stop Nut 3/4-16 (LH Thread) Flexloc	1
29	BB-009-41	Ball Bearing - ND #45505	1
30	WS-012-46	Washer (0.003 Thk.)	AR
31	WS-012-47	Washer (0.010 Thk.)	AR
32	WS-030-79	Washer (0.005 Thk.)	AR
33	00-070015	Spacer - Upper Planetary Shaft	1
34	00-070033	Sleeve - Drive	1
35	00-012430-00161	Key	1
36	00-070039	Roller - Clutch	10
37	00-070055	Spring - Roller	10
38	00-070032	Gear - Roller Clutch (46T)	1
39	00-070020-00002	Gear - Bevel (46T) (Order 75393-2 Also)	1
40	00-070042	Bushing - Upper Clutch Gear	1
41	00-070040	Gear - Upper Clutch (29T)	1
42	00-012430-00055	Key 3/16 x 3/16 x 1	2
43	00-070035-00001	Sleeve - Clutch	1
44	00-070031	Bushing - Lower Clutch Gear	1
45	00-124743	Gear - Lower Clutch (38T)	1
46	00-070046	Spacer - Lower Planetary Shaft	1
47	BB-008-33	Ball Bearing - Fafnir #205WD	1
48	00-070024	Planetary Shaft	1
49	00-070016	Spacer - Planetary	1
50	00-110334	Seal - Planetary	1
51	PL-003-14	Expansion Plug (Located In Transmission Housing)	1
	00-875436	Transmission Shaft & Gear Unit (Incls. Items 20 thru 26)	1

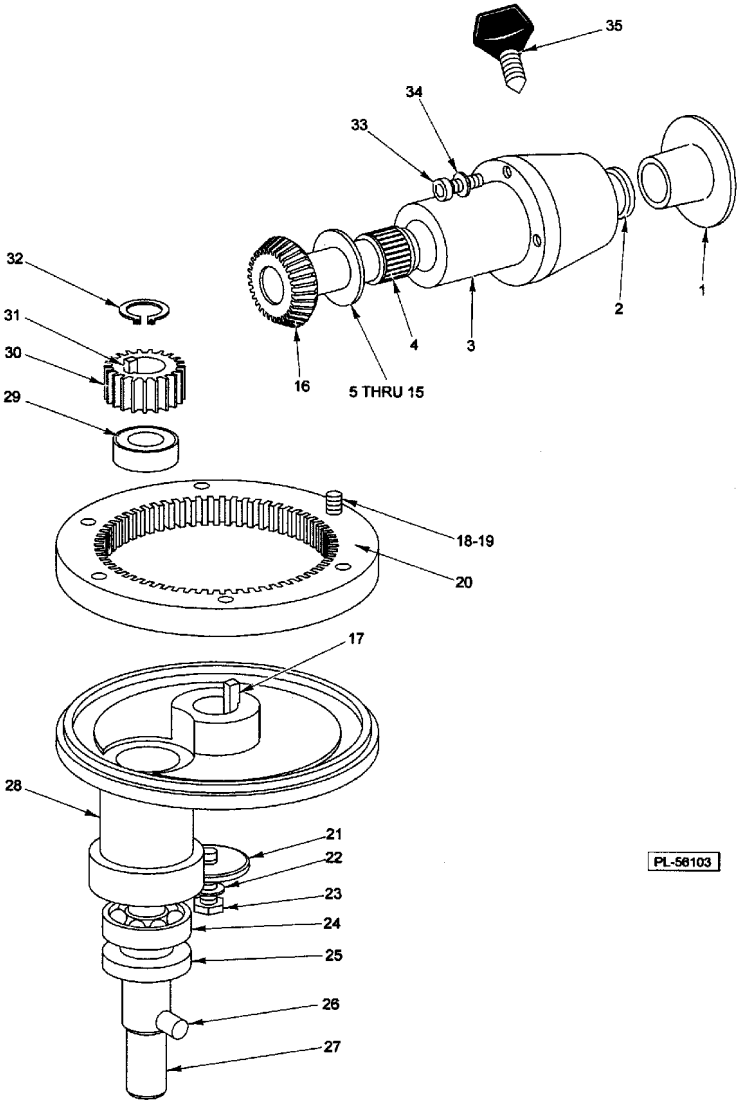

PLANETARY AND ATTACHMENT HUB

PLANETARY AND ATTACHMENT HUB

PLANETARY AND ATTACHMENT HUB

ILLUS. PL-56103	PART NO.	NAME OF PART	AMT.
1	00-114824-00001	Plug - Attachment Hub	1
2	00-070090	Seal - Attachment Hub	1
3	00-070511-00003	Attachment Hub & Bearings Assy. (Incls. Item 4)	1
4	BN-002-12	Needle Bearing	2
5	00-070045-00001	Washer - Thrust (0.125 Thk.)	AR
6	00-070045-00002	Washer - Thrust (0.119 Thk.)	AR
7	00-070045-00003	Washer - Thrust (0.121 Thk.)	AR
8	00-070045-00004	Washer - Thrust (0.123 Thk.)	AR
9	00-070045-00005	Washer - Thrust (0.127 Thk.)	AR
10	00-070045-00006	Washer - Thrust (0.129 Thk.)	AR
11	00-070045-00009	Washer - Thrust (0.131 Thk.)	AR
12	00-070045-00010	Washer - Thrust (0.133 Thk.)	AR
13	00-070045-00011	Washer - Thrust (0.136 Thk.)	AR
14	00-070045-00012	Washer - Thrust (0.139 Thk.)	AR
15	00-070045-00013	Washer - Thrust (0.116 Thk.)	AR
16	00-075393-00002	Attach Drive Gear (35T) & Expansion Plug Assy. (Order 70020-2 Also)	1
17	00-012430-00158	Key 1/4 Sq. x 1 1/2 Lg	1
18	SC-040-16	Cap Screw 5/16-18 x 1 Socket Fil. Hd	6
19	WL-003-48	Lockwasher 5/16 High Collar	6
20	00-438472	Gear - Internal (59T)	1
21	00-070047-00001	Washer - Planetary	1
22	WL-006-27	Lockwasher 3/8 Light (SST)	1
23	SC-062-58	Cap Screw 3/8-24 x 1 1/4 Hex Hd	1
24	BB-017-36	Ball Bearing - SKF #6205Z	1
25	00-110335	Seal - Agitator Shaft	1
26	00-070019	Pin - Agitator	1
27	00-070339	Agitator Shaft Assy. (Incls. Item 26)	1
28	00-069990-00001	Planetary	1
29	BB-020-06	Ball Bearing - Fafnir 204KDFA51580	1
30	00-070014	Pinion - Agitator Shaft (18T)	1
31	00-012430-00142	Key 1/4 Sq. x 1 Lg	1
32	RR-004-06	Retaining Ring	1
33	SC-040-15	Cap Screw 5/16-18 x 1-1/4 Socket Fil. Hd	3
34	WL-003-43	Lockwasher 5/16 Light	3
35	00-108197-00001	Thumb Screw 1-1/4	1
	00-113703	Tie - Cable	2

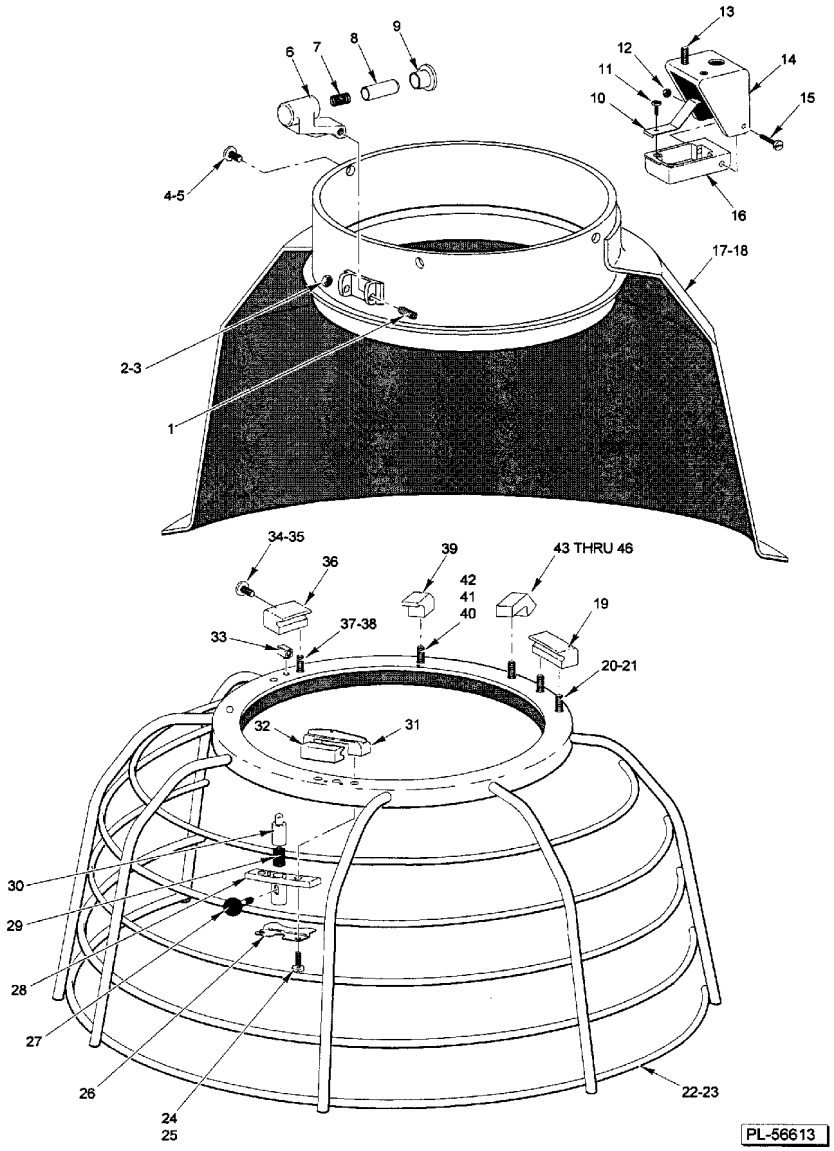

BOWL GUARD UNIT
(PREVIOUS CONSTRUCTION)

BOWL GUARD UNIT
(PREVIOUS CONSTRUCTION)

BOWL GUARD UNIT
(PREVIOUS CONSTRUCTION)

ILLUS. PL-56613	PART NO.	NAME OF PART	AMT.
1	00-478602	Screw - Shouldered Slotted Hd	1
2	NS-031-50	Stop Nut Special 6-32 (SST) (ML-104421 & ML-134211)	1
3	NS-011-07	Mach. Nut 6-32 Hex (SST) (ML-134114 & ML-134213)	1
4	00-070641-00011	Thumb Screw 8-32 Special (ML-104421 & ML-134211)	3
5	SC-121-91	Mach. Screw 8-32 x 1/4 Hex Button Hd. (SST) (ML-134114 & ML-134213)	3
6	00-479007	Latch - Cage Detent (Incls. Items 7, 8, & 9)	1
7	00-437446-00001	Spring - Cage Detent	1
8	00-437724	Plunger - Detent	1
9	00-437725	Bushing - Detent	1
10	00-437815	Spring - Reed Switch	1
11	SC-018-50	Mach. Screw 6-32 x 1/4 Slotted Pan Hd	1
12	NS-048-11	Lock Nut Special 8-32 (SST)	1
13	SC-068-14	Mach. Screw 8-32 x 3/8 Hex Hd	2
14	00-437728-00004	Housing - Reed (Painted)	1
15	SC-122-48	Mach. Screw 8-32 x 1 3/4 Slotted Rd. Hd. (SST)	1
16	00-087711-304-1	Housing - Reed Switch	1
17	00-874965-00001	Splash Guard & Latch Assy. (Painted) (ML-104421 & ML-134211)	1
18	00-874965-00002	Splash Guard & Latch Assy. (ML-134114 & ML-134213)	1
19	00-437713	Shoe - Fixed	1
20	SC-122-45	Mach. Screw Special 1/4-20 x 3/8 Slotted Truss Hd. (SST) (ML-104421 & ML-134211)	2
21	SC-122-52	Mach. Screw Special 1/4-20 x 3/8 Hex Button Hd. (SST) (ML-134114 & ML-134213)	2
22	00-874970-00001	Wire Cage Assy. (ML-104421 & ML-134211)	1
23	00-874970-00002	Wire Cage Assy. (ML-134114 & ML-134213)	1
24	SC-122-46	Mach. Screw Special 1/4-20 x 3/4 Slotted Truss Hd. (SST) (ML-104421 & ML-134211)	2
25	SC-122-68	Mach. Screw 1/4-20 x 3/4 Hex Button Hd. (SST) (ML-134114 & ML-134213)	2
26	00-437817	Stop - Cage	1
27	00-437436	Pin - Plunger	1
28	00-437447	Housing - Plunger	1
29	00-437446-00002	Spring - Cage On/Off	1
30	00-437432	Plunger	1
31	00-437718-00002	Saddle - Shoe	1
32	00-437715	Shoe - Saddle	1
33	00-437720	Key - Shoe	1
34	SC-123-07	Mach. Screw Special 8-20 x 1/2 Slotted Truss Hd. (SST) (ML-104421 & ML-134211)	1
35	SC-121-92	Mach. Screw Special 8-32 x 3/8 Hex Button Hd. (SST) (ML-134114 & ML-134213)	1
36	00-437714	Shoe - Adjustable	1
37	SC-122-45	Mach. Screw Special 1/4-20 x 3/8 Slotted Truss Hd. (SST) (ML-104421 & ML-134211)	2
38	SC-122-52	Mach. Screw Special 1/4-20 x 3/8 Hex Button Hd. (SST) (ML-134114 & ML-134213)	2
39	00-437816	Block - Rear Guide	1
40	SC-122-44	Mach. Screw Special 8-32 x 3/8 Slotted Truss Hd. (SST) (ML-104421 & ML-134211)	1
41	SC-121-92	Mach. Screw Special 8-32 x 3/8 Hex Button Hd. (SST) (ML-134114 &ML-134213)	1
42	00-512987	Adhesive (ML-134114 & ML-134213)	AR
43	00-437719	Retainer - Magnet	1
44	00-111941	Magnet	1
45	SC-122-44	Mach. Screw Special 8-32 x 3/8 Slotted Truss Hd. (SST) (ML-104421 & ML-134211)	1
46	SC-121-92	Mach. Screw Special 8-32 x 3/8 Hex Button Hd. (SST) (ML-134114 & ML-134213)	1
	00-438607	Ingredient Chute	1
	00-874958-00001	Reed Assy. (Incls. Items 10, 11, & 16)	1
	00-874964	Bowl Guard Kit (Use W/Mach. Not Equipped W/Bowl Guard.)	1

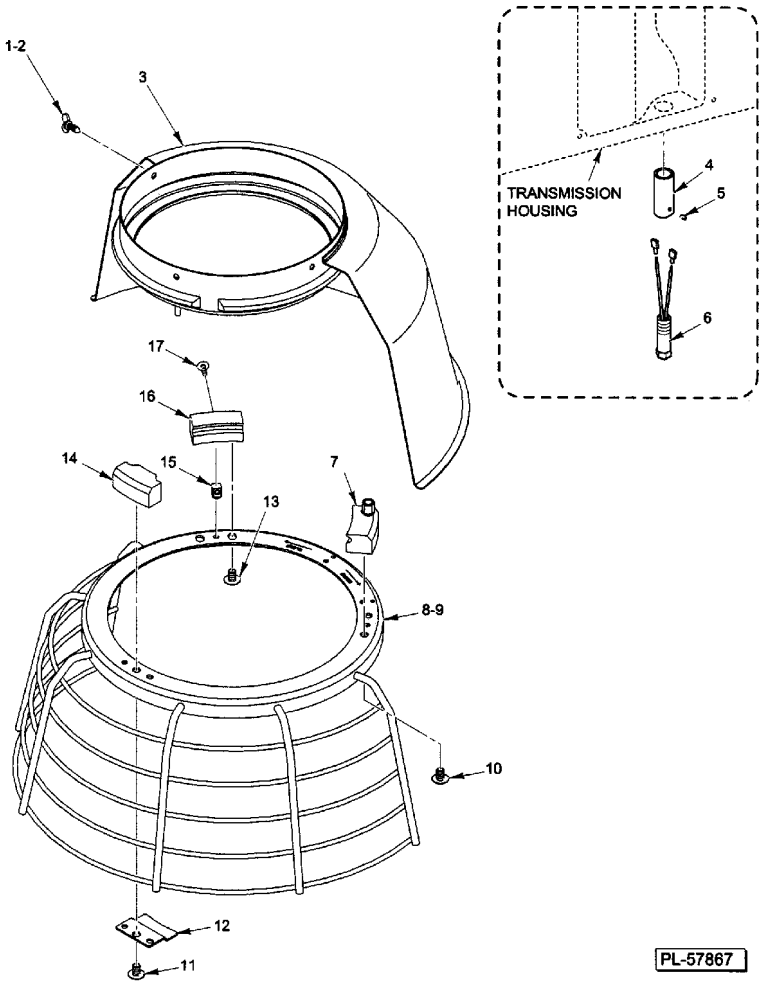

BOWL GUARD UNIT
(CURRENT CONSTRUCTION)

BOWL GUARD UNIT
(CURRENT CONSTRUCTION)

ILLUS. PL-57867	PART NO.	NAME OF PART	AMT.
1	00-070641-00011	Thumb Screw 8-32 Special (ML-134258)	3
2	SC-128-73	Mach. Screw 8-32 x 1/4 Tx. Button Hd. (SST) (ML-134261)	3
3	00-874967	Guard - Splash	1
4	00-874971	Extension - Bowl Guard Switch	1
5	SC-075-14	Set Screw 6-32 x 1/8 Hex Hdls., Cup Pt	1
6	00-874958-00001	Reed - Switch & Plug	1
7	00-874968	Shoe - Fixed (Incls. Magnet)	1
8	00-874969-00001	Wire Cage (ML-134258)	1
9	00-874969-00002	Wire Cage (ML-134261)	1
10	SC-122-45	Mach. Screw 1/4-20 x 3/8 Slotted Truss Hd	2
11	SC-122-45	Mach. Screw 1/4-20 x 3/8 Slotted Truss Hd	1
12	00-874980	Stop - Cage	1
13	SC-122-45	Mach. Screw 1/4-20 x 3/8 Slotted Truss Hd	2
14	00-874983	Shoe - Front	1
15	00-437720	Key - Shoe	1
16	00-437714	Shoe - Adjustable	1
17	SC-123-07	Mach. Screw 1/4-20 x 3/8 Slotted Truss Hd	1

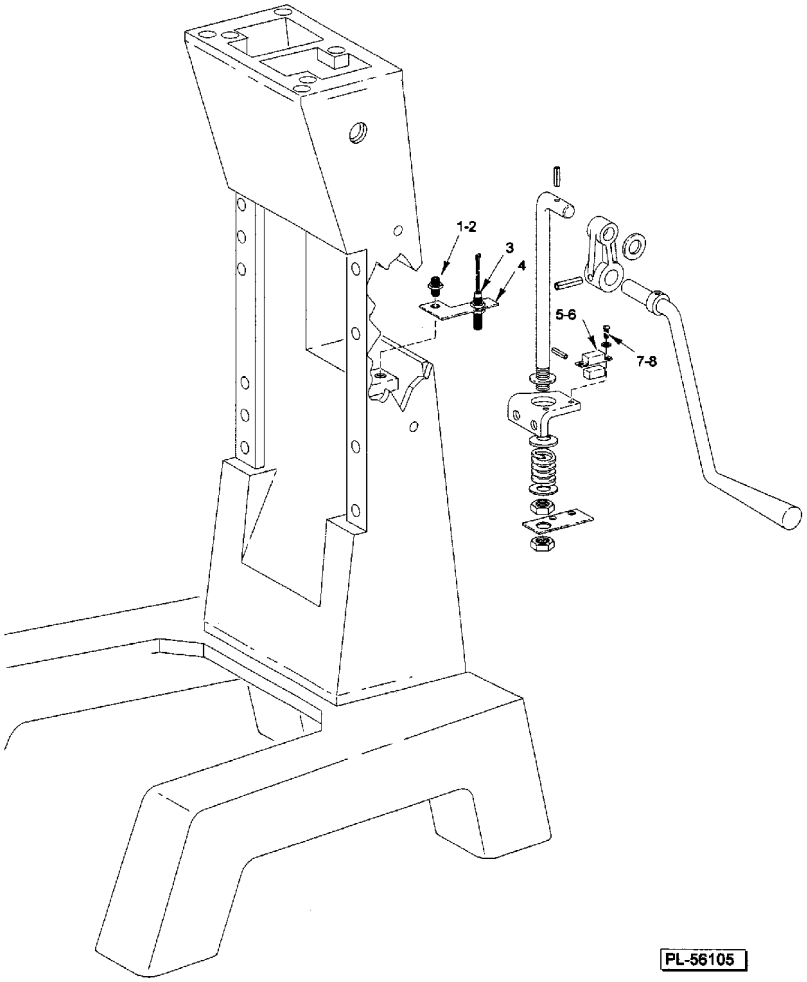

BOWL HEIGHT SENSING UNIT

BOWL HEIGHT SENSING UNIT

ILLUS. PL-56105	PART NO.	NAME OF PART	AMT.
1	SC-047-46	Set Screw 3/8-16 x 1-1/4 Hex Hdls., Half Dog Pt	1
2	NS-017-15	Jam Nut 3/8-16 Hex	1
3	00-087711-306-1	Switch - Bowl Height Sensing	1
4	00-438387	Bracket - Bowl Height Sensor	1
5	00-120332	Retainer - Magnet	1
6	00-111941	Magnet	1
7	SC-021-01	Mach. Screw 4-40 x 1/4 Slotted Rd. Hd. (SST)	2
8	WL-003-01	Lockwasher #4 Light	2
	00-065890-00029	Connector - Insulated	1

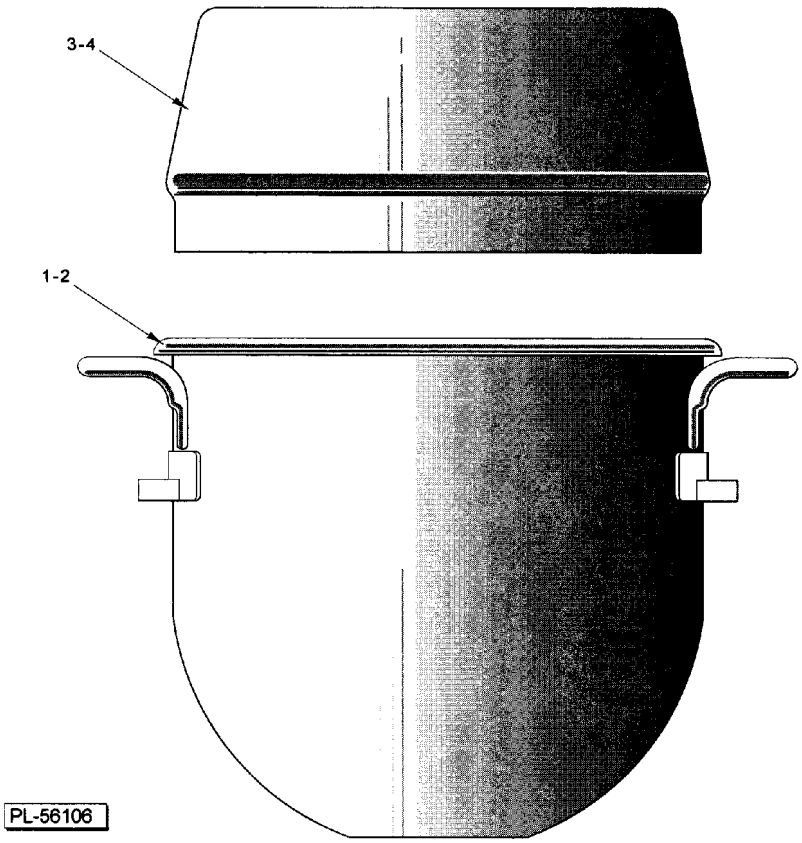

BOWL

BOWL

ILLUS. PL-56106	PART NO.	NAME OF PART	AMT.
1	00-437410	Bowl - 30 Qt. (SST) (Packaged)	1
2	00-295647	Bowl - 20 Qt. (SST) (Packaged)	1
3	00-438080	Splash Cover Assy. - 30 Qt. (Packaged)	1
4	00-438079	Splash Cover Assy. - 20 Qt. (Packaged)	1
	00-438607	Scraper - Bowl (Packaged)	1

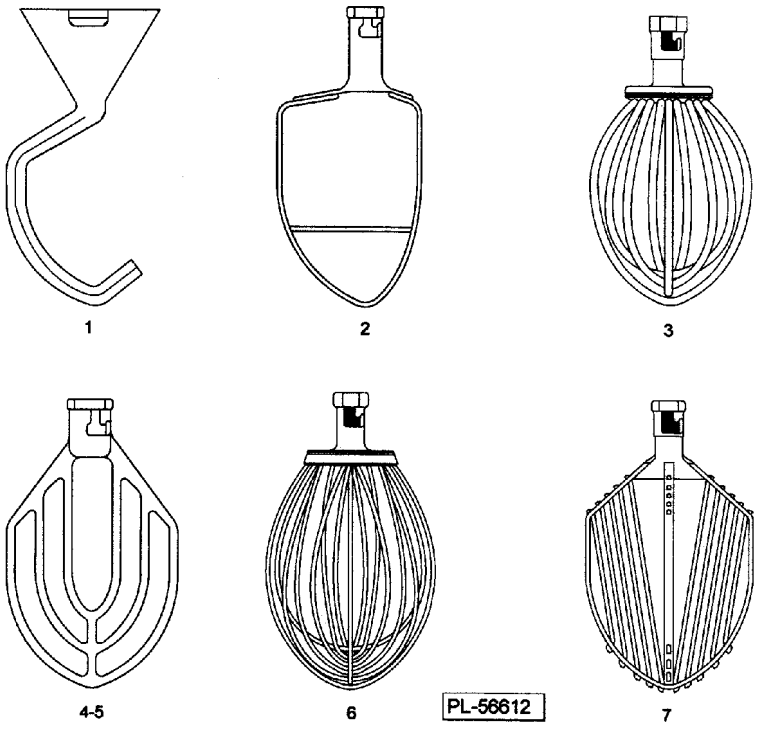

AGITATORS

AGITATORS

ILLUS. PL-56612	PART NO.	NAME OF PART	AMT.
1		"E" Dough Arm (Alum.) (Packaged) (30 Qt. 00-295120)(20 Qt. 00-275465)	1
2	00-295037	"P" Pastry Knife (Packaged) 30 Qt. ONLY	1
3	00-295163	"I" Wire Whip (SST) (Packaged) 30 Qt. ONLY	1
4		"B" Flat Beater (Alum.) (Packaged) (30 Qt. 00-275450)(20 Qt. 00-275461)	1
5		"B" Flat Beater (SST) (Packaged) (30 Qt. 00-275451)(20 Qt. 00-275462)	1
6		"D" Wire Whip (SST) (Packaged) (30 Qt. 00-275899)(20 Qt. 00-295029)	1
7	00-295161	"C" Wing Whip (Packaged) 30 Qt. ONLY	1
	00-478596	"ED" Dough Arm - Spiral (Not Shown) (Packaged) 30 Qt. ONLY	1