CATALOG OF REPLACEMENT PARTS



D330 Series Mixers ML-104481

ML-104481 **D330**

A product of HOBART 701 S. RIDGE AVENUE TROY, OHIO 45374-0001

FORM 19153 Rev. B (April 2017)

 © HOBART 2017

Table of Contents

5 COVER PAGE F19153
7 TIMER CONTROL AND SWITCH UNIT
9 ELECTRICAL COMPONENT PANEL - 1 PHASE
11 ELECTRICAL COMPONENT PANEL - 3 PHASE
13 BASE AND PEDESTAL
15 SHIFTER UNIT
17 TRANSMISSION CASE
19 MOTOR PARTS - 1 PHASE
21 MOTOR PARTS - 3 PHASE
23 TRANSMISSION
25 PLANETARY AND ATTACHMENT HUB
27 BOWL GUARD UNIT
29 BOWL LIFT UNIT
31 BOWL
33 AGITATORS

HOBART

CATALOG OF REPLACEMENT PARTS

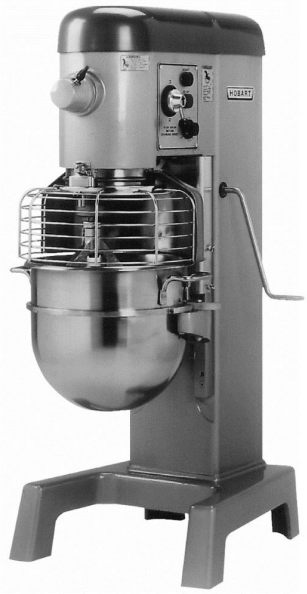

D330 Series Mixers

ML-104481 **D330**

A product of HOBART 701 S. RIDGE AVENUE TROY, OHIO 45374-0001

FORM 19153

COVER PAGE F19153

COVER PAGE F19153

ILLUS. PART NO.	NAME OF PART	AMT.
PL-COVER PAGE F19153		
	ML-104481	AR

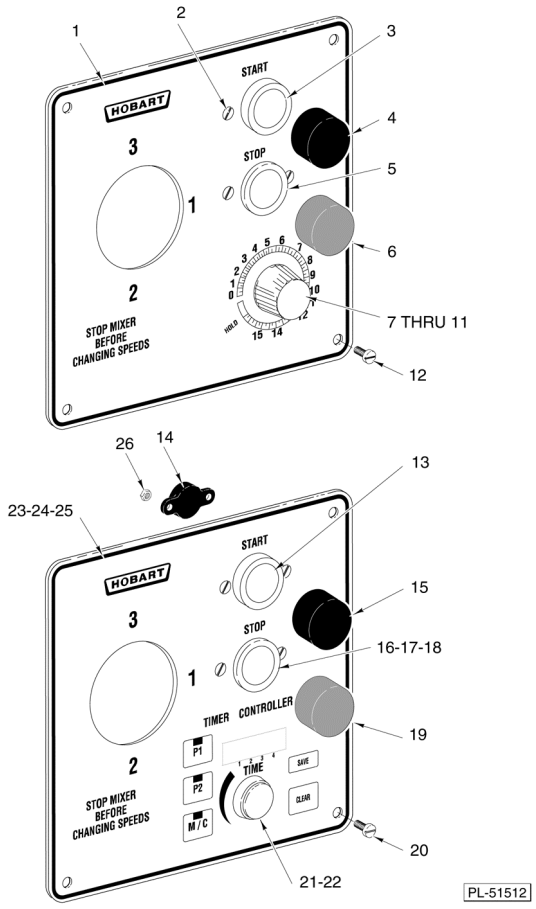

TIMER CONTROL AND SWITCH UNIT

TIMER CONTROL AND SWITCH UNIT

ILLUS. PL-51512	PART NO.	NAME OF PART	AMT.
1	00-271312	Plate - Switch & Timer	1
2	SC-013-12	Mach. Screw 6-32 x 1/4 Flat Hd	4
3	00-087711-183-4	Switch - Push Button (Start)	1
4	00-102467-00001	Cap - Push Button (Start) (Black)	1
5	00-087711-183-2	Switch- Push Button (Stop)	1
6	00-102467-00002	Cap - Push Button (Stop) (Red)	1
7	00-291748	Knob - Timer	1
8	00-294650-004-1	Timer Assy. (115 V., 60 Hz.)	1
9	00-294650-004-2	Timer Assy. (200/300 V., 60 Hz.)	1
10	00-271313	Insulator - Timer	1
11	SC-013-07	Mach. Screw 5-40 x 1/4 Flat Hd	2
12	SD-024-01	Self-Tapping Screw 10-24 x 3/8 Pan Hd., Type TT	4
13	00-087711-183-4	Switch - Push Button (Start)	1
14	00-438488	NLA - Obsolete--Buzzer	1
15	00-102467-00001	Cap - Push Button (Start) (Black)	1
16	SC-053-38	Mach. Screw 6-32 x 1/4 Truss Hd. (SST)	4
17	00-087711-183-2	Switch- Push Button (Stop)	1
18	00-087711-183-3	Switch - Push Button (N.C.)	1
19	00-102467-00002	Cap - Push Button (Stop) (Red)	1
20	SD-024-01	Self-Tapping Screw 10-24 x 3/8 Pan Hd., Type TT	4
21	00-437775	Knob - Potentiometer	1
22	00-437742	Seal - Shaft	1
23	00-438323-00001	Switch Plate & Keypad Assy. (120 VAC)	1
24	00-438355-00001	NLA - Obsolete--Board Assy. (120 VAC)	1
25	00-438355-00002	NLA - Obsolete--Board Assy. (240 VAC)	1
26	NS-046-17	Stop Nut 4-40 Hex	2

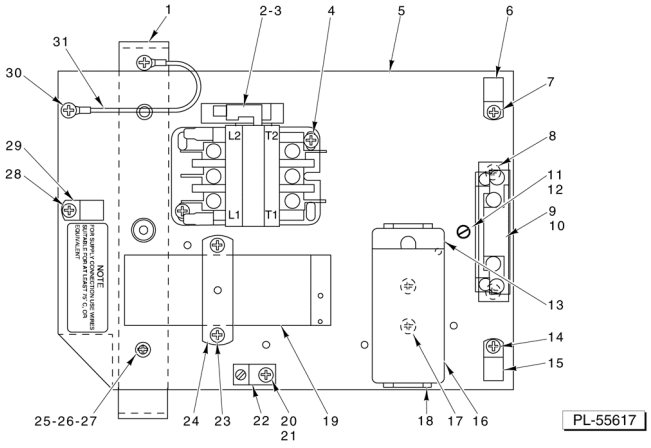

ELECTRICAL COMPONENT PANEL - 1 PHASE

ELECTRICAL COMPONENT PANEL - 1 PHASE

ILLUS. PL-55617	PART NO.	NAME OF PART	AMT.
1	00-274031	Bracket - Support (Component Panel)	1
2	00-087713-037-1	Contactor (220 V. Coil) (2 Pole)	1
3	00-087713-037-2	Contactor (115 V. Coil) (2 Pole)	1
4	SD-015-20	Self-Tapping Screw 10-32 x 3/8 Phil. Pan Hd., Type TT	2
5	00-274027	Panel - Component Mounting	1
6	00-078752-00009	Clamp - Cable	1
7	SD-015-20	Self-Tapping Screw 10-32 x 3/8 Phil. Pan Hd., Type TT	1
8	SD-015-20	Self-Tapping Screw 10-32 x 3/8 Phil. Pan Hd., Type TT	2
9	00-088196-006-1	Relay - Thermal Overload (1 Ph.)	1
*10		Heater Element (Overload Relay)	AR
11	SC-060-03	Mach. Screw 10-24 x 3/4 Rd. Hd	1
12	WL-007-12	Lockwasher 10 External Shakeproof	1
13	00-070486-00002	Cap - Capacitor End	1
14	SD-015-20	Self-Tapping Screw 10-32 x 3/8 Phil. Pan Hd., Type TT	1
15	00-078752-00009	Clamp - Cable	1
16	00-070487-00006	Capacitor (Motor Start)	1
17	SD-029-06	Self-Tapping Screw 10-24 x 1/2 Phil. Flat Hd., Type F	2
18	00-066621-00001	Bracket - Capacitor (Motor Start)	1
19	00-274034	Capacitor (Motor Run)	1
20	SD-015-20	Self-Tapping Screw 10-32 x 3/8 Phil. Pan Hd., Type TT	1
21	WL-007-12	Lockwasher 10 External Shakeproof	2
22	00-118544-00001	Lug - Solderless	1
23	SD-015-20	Self-Tapping Screw 10-32 x 3/8 Phil. Pan Hd., Type TT	2
24	00-274032	Bracket - Capacitor (Motor Run)	1
25	00-274033	Nut - Well (Component Bracket)	2
26	SC-060-85	Mach. Screw 10-24 x 1 Rd. Hd	2
27	WL-007-12	Lockwasher 10 External Shakeproof	2
28	SD-015-20	Self-Tapping Screw 10-32 x 3/8 Phil. Pan Hd., Type TT	1
29	00-078752-00009	Clamp - Cable	1
30	SD-015-20	Self-Tapping Screw 10-32 x 3/8 Phil. Pan Hd., Type TT	2
31	00-087525-00669	Lead Wire Assy	1
	00-113703	Cable Tie	AR

* Give Elec. Spec., Mach. Model, & Motor Type

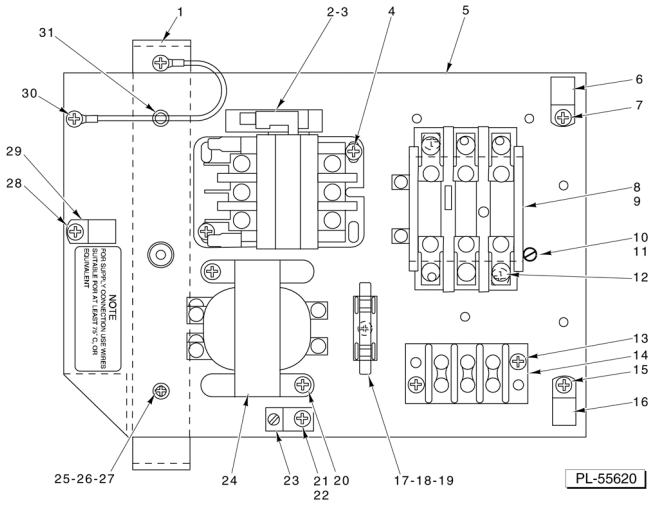

ELECTRICAL COMPONENT PANEL - 3 PHASE

ELECTRICAL COMPONENT PANEL - 3 PHASE

ILLUS. PL-55620	PART NO.	NAME OF PART	AMT.
1	00-274031	Bracket - Support (Component Panel)	1
2	00-087713-102-1	Contactor (208/240 V., 60 Hz., 3 Ph.) (30 Amp.) (3 Pole)	1
3	00-087713-102-2	Contactor (30 Amp.) (3 Pole)	1
4	SD-015-20	Self-Tapping Screw 10-32 x 3/8 Phil. Pan Hd., Type TT	2
5	00-274027	Panel - Component Mounting	1
6	00-078752-00009	Clamp - Cable	1
7	SD-015-20	Self-Tapping Screw 10-32 x 3/8 Phil. Pan Hd., Type TT	1
8	00-088196-009-1	Relay - Thermal Overload (3 Ph.) Less Elements	1
*9		Heater Element (Overload Relay)	AR
10	SC-060-03	Mach. Screw 10-24 x 3/4 Rd. Hd	1
11	WL-007-12	Lockwasher 10 External Shakeproof	1
12	SD-015-20	Self-Tapping Screw 10-32 x 3/8 Phil. Pan Hd., Type TT	2
13	SD-033-72	Self-Tapping Screw 10-24 x 7/8 Phil. Pan Hd., Type TT	2
14	00-271336	Terminal Block	1
15	SD-015-20	Self-Tapping Screw 10-32 x 3/8 Phil. Pan Hd., Type TT	1
16	00-078752-00009	Clamp - Cable	1
**17	00-294436-00003	Block - Fuse	1
**18	FE-009-25	Fuse (250 V., 0.5 Amp.)	1
**19	SD-015-38	Self-Tapping Screw 6-32 x 3/8 Phil. Pan Hd., Type TT	1
**20	SD-015-20	Self-Tapping Screw 10-32 x 3/8 Phil. Pan Hd., Type TT	2
21	SD-015-20	Self-Tapping Screw 10-32 x 3/8 Phil. Pan Hd., Type TT	1
22	WL-007-12	Lockwasher 10 External Shakeproof	2
23	00-118544-00001	Lug - Solderless	1
**24	00-101935	Transformer	1
25	00-274033	Nut - Well (Component Bracket)	2
26	SC-060-85	Mach. Screw 10-24 x 1 Rd. Hd	2
27	WL-007-12	Lockwasher 10 External Shakeproof	2
28	SD-015-20	Self-Tapping Screw 10-32 x 3/8 Phil. Pan Hd., Type TT	1
29	00-078752-00009	Clamp - Cable	1
30	SD-015-20	Self-Tapping Screw 10-32 x 3/8 Phil. Pan Hd., Type TT	2
31	00-087525-00669	Lead Wire Assy	1
	00-113703	Cable Tie	AR

* Give Elec. Spec., Mach. Model, & Motor Type.
** Above 250 V. Machines.

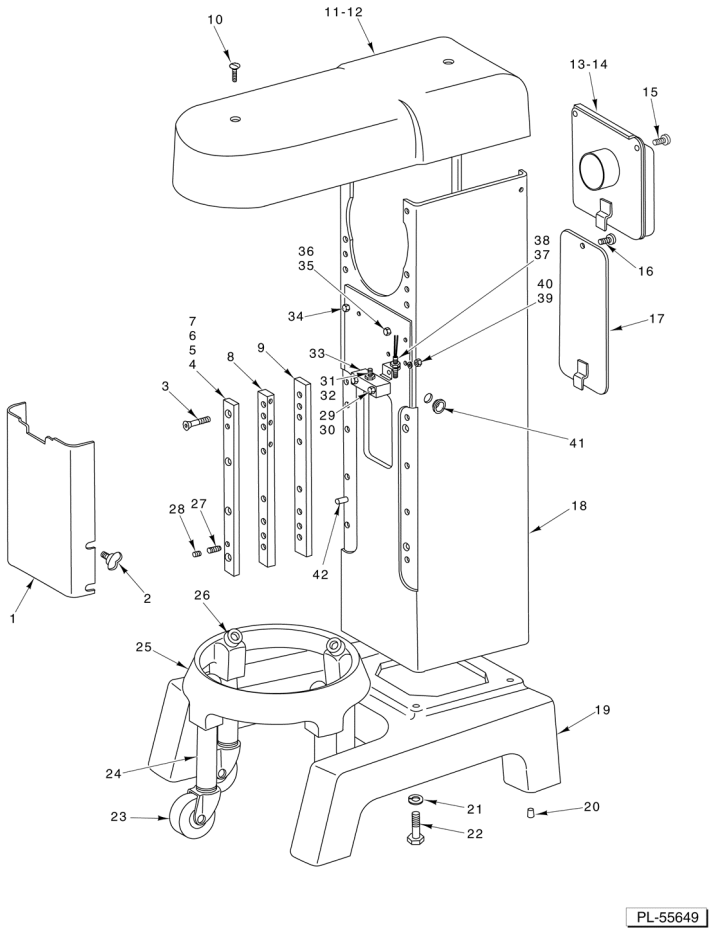

BASE AND PEDESTAL

BASE AND PEDESTAL

ILLUS. PL-55649	PART NO.	NAME OF PART	AMT.
1	00-437824	Cover - Bowl Support	1
2	00-070641-00001	Thumb Screw	4
3	SC-061-06	Cap Screw 5/16-18 x 13/4 Flat Hd	8
4	00-271257	NLA - Obsolete--Gib - Upper	2
5	00-271265-00001	Shim - Gib (0.003 Thk.)	AR
6	00-271265-00002	Shim - Gib (0.005 Thk.)	AR
7	00-271265-00003	Shim - Gib (0.010 Thk.)	AR
8	00-271262	NLA - Obsolete--Gib - Center	2
9	00-271260	NLA - Obsolete--Gib - Lower	2
10	SC-023-19	Mach. Screw 1/4-20 x 3/4 Oval Hd. (SST)	2
11	00-274038	Cover - Top Assy. (Incls. Item 12)	1
12	00-123687-00007	Gasket	1
13	00-274668	Vent - Air Intake (1 Phase)	1
14	00-271300-00001	Vent - Air Intake (3 Phase) (Not Shown)	1
15	SC-053-41	Mach. Screw 1/4-20 x 1/2 Slotted Truss Hd. (SST)	2
16	SC-053-41	Mach. Screw 1/4-20 x 1/2 Slotted Truss Hd. (SST)	1
17	00-271299-00001	Cover - Lift Mechanism	1
18	00-271284-00002	NLA - Obsolete--Pedestal	1
19	00-271227-002-2	Base Assy	1
20	00-110717-00003	Plug - Base Assy. (Contains Four Plugs in a Bag)	1
21	WL-004-11	Lockwasher 1/2 Helical	4
22	SC-120-28	Cap Screw 1/2-13 x 2 Hex Hd	4
23	00-087668-00002	Caster	4
24	00-070590-00001	Leg (6 Lg.) (30 Qt.)	4
25	00-315015	Bowl Truck Assy. (Incls. Items 23, 24, & 26)	1
26	00-018682-00001	Foot	4
27	SC-112-65	Set Screw 5/16-18 x 3/4 Hdls., Cone Pt.	2
28	SC-047-30	Set Screw 5/16-18 x 5/16 Hdls., Flat Pt.	2
29	SC-036-11	NLA - Obsolete--Cap Screw 1/4-20 x 2 Hex Hd	2
30	WL-006-16	Lockwasher 1/4 Helical (SST)	2
31	SC-109-85	NLA - Obsolete--Set Screw 5/16-18 x 1 1/2 Hdls., Oval Pt	1
32	NS-017-08	Jam Nut 5/16-18 Hex	1
33	00-271267	Block - Stop	1
34	SC-063-33	Set Screw 3/8-16 x 3/8 Hdls., Flat Pt.	2
35	SC-036-06	Cap Screw 1/4-20 x 1 Hex Hd	4
36	WL-006-16	Lockwasher 1/4 Helical (SST)	4
37	00-087711-306-1	Switch - Bowl Height Sensing	1
38	00-438577	Bracket - Sensor	1
39	WL-006-16	Lockwasher 1/4 Light (Use to Mount Item 38) (SST)	1
40	NS-013-02	Nut 1/4-20 Hex (Use to Mount Item 38)	1
41	00-271343	Grommet - Handle	1
42	00-011800-00118	Dowel	2

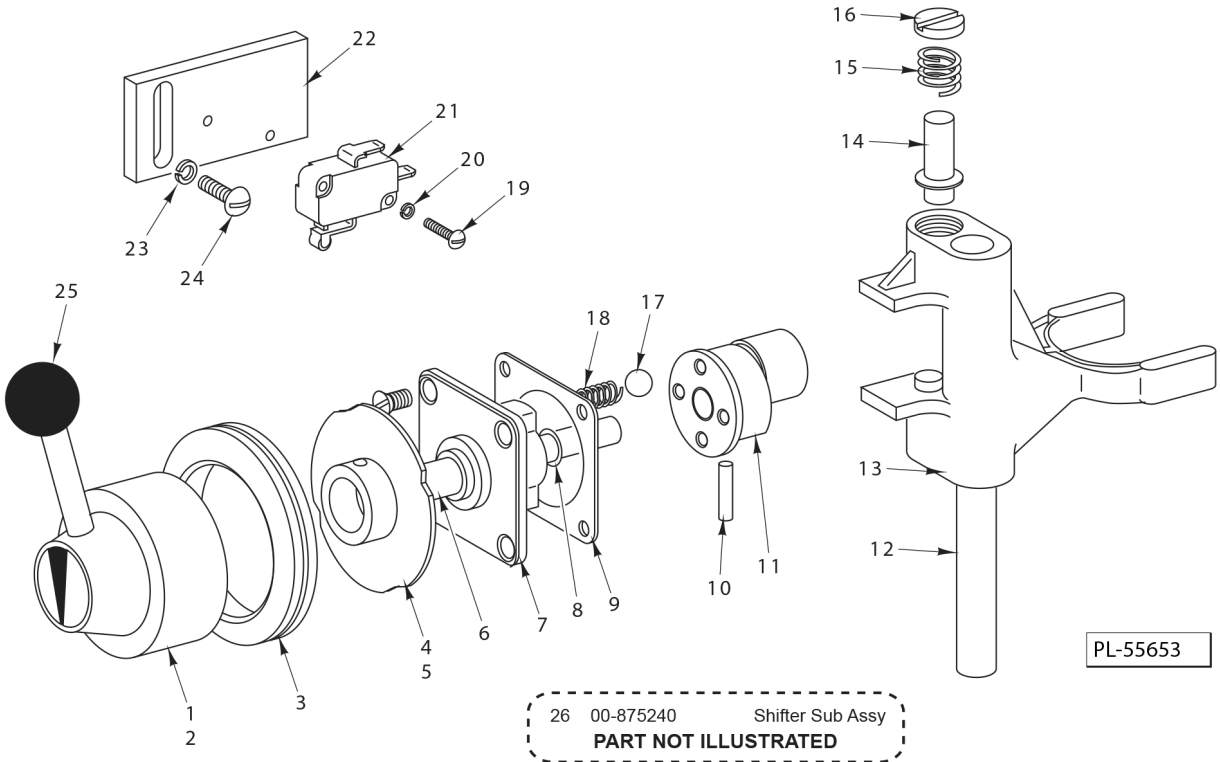

SHIFTER UNIT

SHIFTER UNIT

ILLUS. PL-55653	PART NO.	NAME OF PART	AMT.
1	SC-047-17	Set Screw 1/4-20 x 3/4 Hdls., Cup Pt.	1
2	00-291272	Shifter Handle Assy. (Incls. Items 1 & 25)	1
3	00-110961	Grommet - Shifter Handle	1
4	00-271276	Cam - Interlock Assy	1
5	SC-047-70	Set Screw 10-32 x 3/8 Hdls., Cup Pt.	1
6	00-875238	Shaft - Shifter	1
7	00-290115-00001	Plate - Index	1
8	00-067500-00044	O-Ring	1
9	00-023946	Gasket - Index Plate	AR
10	PS-003-08	Spiral Pin 1/8 Dia. x 3/4 Lg	1
11	00-873504	Cam - Gear Shifter	1
12	00-271291	Rod - Shifter Guide	1
13	00-271245-00002	Yoke - Shifter	1
14	00-012733	Plunger - Shifter Yoke	2
15	00-012734	Spring - Shifter Yoke	2
16	00-012732	Retainer - Shifter Yoke Spring	2
17	BA-002-09	Ball 1/4 Dia.	2
18	00-111170	Spring - Detent	2
19	SC-021-05	Mach. Screw 4-40 x 5/8 Rd. Hd. (SST)	2
20	WL-003-01	Lockwasher #4 Light	2
21	00-271315	Switch - Interlock (10 Amp., 250 VAC)	1
22	00-271277	Plate - Switch Mounting	1
23	WL-003-20	Lockwasher #10 Light	2
24	SC-009-25	Mach. Screw 10-24 x 5/8 Slotted Rd. Hd.	2
25	00-070085	Knob - Shifter Handle Ball	1
26	00-875240	Shifter Sub-Assy. (Includes Items 6, 7, 8, 10, 11, 17, & 18)	1

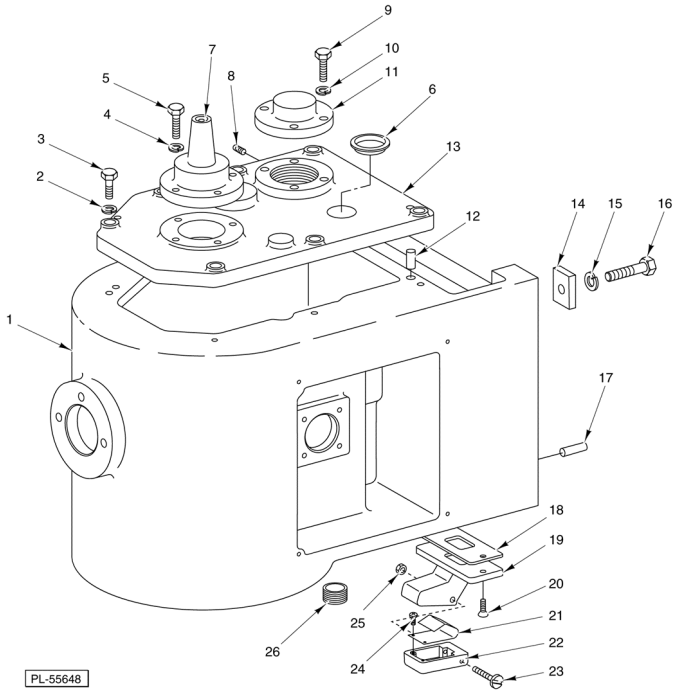

TRANSMISSION CASE

TRANSMISSION CASE

ILLUS. PL-55648	PART NO.	NAME OF PART	AMT.
1	00-271206-002-2	NLA - Obsolete--Case - Transmission (ML-104483, ML-104484, & ML-134118)	1
2	WL-003-44	Lockwasher 5/16 Helical	7
3	SC-120-38	Cap Screw 5/16-18 x 1 Hex Hd	7
4	WL-003-37	Lockwasher 1/4 Medium	4
5	SC-036-06	Cap Screw 1/4-20 x 1 Hex Hd	4
6	00-064871	Plug - Friction	1
7	00-271222-00002	Retainer - Bearing (Planetary Shaft)	1
8	SC-047-70	Set Screw 10-32 x 3/8 Hdls., Cup Pt	2
9	SC-036-06	Cap Screw 1/4-20 x 1 Hex Hd	4
10	WL-003-37	Lockwasher 1/4 Medium	4
11	00-271225-00002	Retainer - Bearing (Worm Gear Shaft)	1
12	00-011800-00249	Dowel	2
13	00-271218-002-1	Transmission Case Cover Assy	1
14	00-271340	Bar - Reinforcing	6
15	WL-004-06	Lockwasher 3/8 Helical	6
16	SC-116-83	Cap Screw 3/8-16 x 1 1/2 Hex Hd	6
17	00-011800-00118	Dowel	2
18	00-437809	Gasket - Reed Housing	1
19	00-437793-00002	Housing - Reed	1
20	SC-022-22	Mach. Screw 10-24 x 3/4 Flat Hd. (SST)	2
21	00-437435	Spring - Reed Switch	1
22	00-087711-304-1	Housing - Reed Switch	1
23	SC-122-48	Mach. Screw 8-32 x 13/4 Rd. Hd. (SST)	1
24	SC-018-50	Mach. Screw 6-32 x 1/4 Pan Hd	2
25	NS-031-08	Nut - Stop Special 8 x 32 Hex (SST)	1
26	FP-085-17	Pipe Plug 5/8 Hex Socket	1
	00-068288	Shim (Between Trans. Case & Pedestal) (Not Shown)	AR

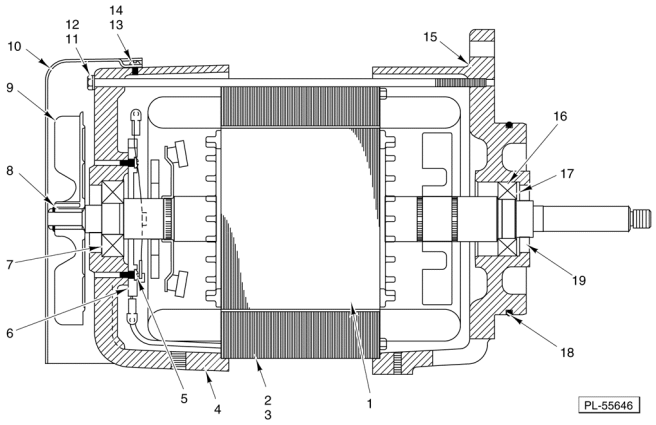

MOTOR PARTS - 1 PHASE

MOTOR PARTS - 1 PHASE

ILLUS. PL-55646	PART NO.	NAME OF PART	AMT.
1	00-022275-00276	Rotor Assy. (1 Phase)	1
2	00-065477-162-1	Stator Assy. (120/240 V., 60 Hz.)	1
3	00-065477-162-2	Stator Assy. (208 V., 60 Hz.)	1
4	00-435867-00002	NLA - Obsolete--Housing - Motor (Rear)	1
5	SC-009-49	Mach. Screw 6-32 x 3/8 Rd. Hd	2
6	00-121110	Switch - Starting (Stationary Part)	1
7	BB-005-34	Ball Bearing	1
8	RR-011-05	Retaining Ring	1
9	00-292466-00001	Fan - Ventilating	1
10	00-435868	NLA - Obsolete--Shroud - Motor	1
11	00-271335-00001	NLA - Obsolete--Bolt - Motor (1-Phase)	4
12	WL-003-22	Lockwasher #10 Light	4
13	SC-018-34	Mach. Screw 8-32 x 1/2 Phil. Pan Hd	3
14	WL-003-12	Lockwasher #8 Helical	3
15	00-873505-00002	Housing - Motor (Front)	1
16	BB-015-08	Bearing - Ball	1
17	SL-005-04	Spring - Loading	1
18	OR-001-01	O-Ring	1
19	00-873508	Oil Seal	1
	00-275152	Shim	AR
	00-271255-00003	NLA - Obsolete--Motor Assy. (120/230 V., 60 Hz.)	1
	00-271255-00004	NLA - Obsolete--Motor Assy. (208 V., 60 Hz.)	1

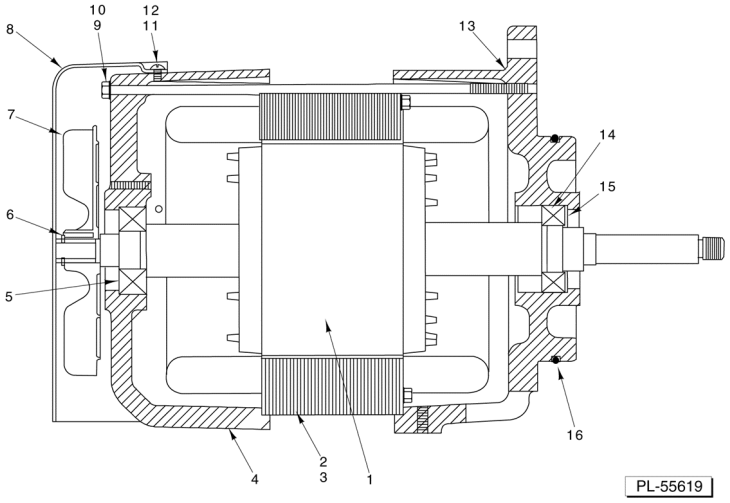

MOTOR PARTS - 3 PHASE

MOTOR PARTS - 3 PHASE

ILLUS. PL-55619	PART NO.	NAME OF PART	AMT.
1	00-015747-00312	Rotor Assy. (3 Phase)	1
2	65478-184-1	Stator Assy. (208 V., 60 Hz.)	1
3	65478-184-2	NLA - Obsolete--Stator Assy (240/480 V., 60 Hz.)	1
4	00-435867-00002	NLA - Obsolete--Housing - Motor (Rear)	1
5	BB-005-34	Ball Bearing (N.D. #Z99504)	1
6	RR-011-5	Retaining Ring	1
7	00-292466-00001	Fan - Ventilating	1
8	00-435868	NLA - Obsolete--Shroud - Motor	1
9	00-271335-00002	Bolt - Motor (3 Phase)	4
10	WL-003-22	Lockwasher #10 Light	4
11	SC018-34	Mach. Screw 8-32 x 1/2 Phil. Pan Hd	3
12	WL-003-12	Lockwasher #8 Helical	3
13	00-271254-00002	Housing - Motor (Front)	1
14	BB-015-08	Ball Bearing (MRC 105KSZZ-01-ST-A-92-C)	1
15	SL-005-04	Spring - Loading	1
16	OR-001-01	O-Ring	1
	00-275152	Shim	AR
	00-271256-00003	NLA - Obsolete--Motor Assy. (208 V., 60 Hz.) (For Service Use 00-875334-00001)	1
	00-875334-00001	Motor Assy. (208 V., 60 Hz.) (Replacement for 00-271256-00003)	1
	00-271256-00004	NLA - Obsolete--Motor Assy. (240/480 V., 60 Hz.) (For Service Use 00-875334-00002)	1
	00-875334-00002	Motor Assy. (240/480 V., 60 Hz.) (Replacement for 00-271256-00004)	1

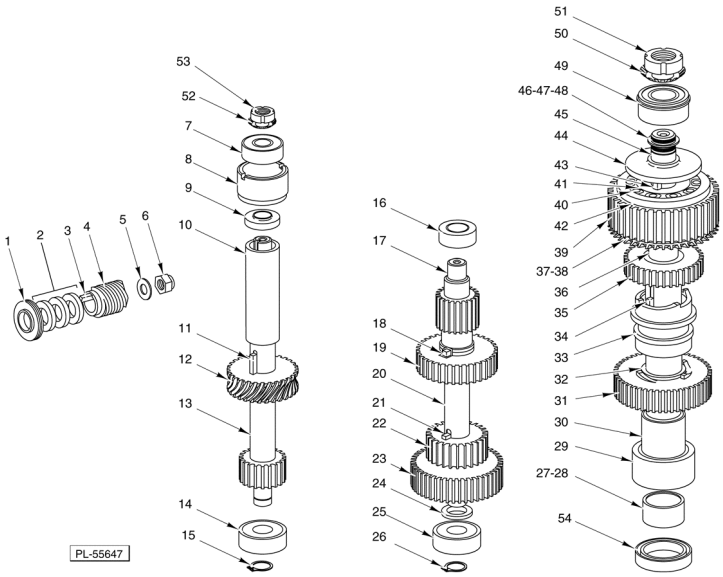

TRANSMISSION

TRANSMISSION

ILLUS. PL-55647	PART NO.	NAME OF PART	AMT.
1	00-271253	Deflector - Grease	1
2	00-077840	Washer - Belleville	6
3	00-012430-00069	Key 3/16 Sq. x 139/64 Lg	1
4	00-271243	Worm (5T) (60 Hz.)	1
5	WS-021-01	Washer (SST)	1
6	NS-047-99	Lock Nut 7/16-20	1
7	BB-021-21	Ball Bearing	1
8	00-271301	Sleeve - Worm Gear	1
9	00-271281	Spacer (Top of Worm Gear)	1
10	00-271280	Spacer (Worm Gear)	1
11	00-012430-00151	Key 1/4 Sq. x 15/16 Lg	1
12	00-271244	Gear - Worm (29T) (60 Hz.)	1
13	00-271242	Shaft - Worm Gear	1
14	BB-020-06	Ball Bearing (Fafnir 204KDFA51580)	1
15	RR-004-07	Retaining Ring	1
16	BB-005-46	Ball Bearing (Fafnir 204KDDFS50545)	1
17	00-271238	Shaft - Transmission	1
18	00-012430-00138	Key 1/4 Sq. x 3/4 Lg	1
19	00-271239	Gear (36T)	1
20	00-271282	Spacer	1
21	00-012430-00152	Key 1/4 Sq. x 113/16 Lg	1
22	00-271240	Gear (27T)	1
23	00-271241	Gear (44T)	1
24	00-271283	Spacer - Lower Center Shaft	1
25	BB-020-06	Ball Bearing (Fafnir 204KDFA51580)	1
26	RR-004-07	Retaining Ring	1
27	00-067500-00070	O-Ring	1
28	00-437599	Seal - Hub	1
29	BB-015-36	Ball Bearing - Hoover (NSK 6007 DDUCE1SRIS)	1
30	00-271278	Spacer - Lower Planetary Shaft	1
31	00-271237	Gear - Lower Clutch (46T)	1
32	00-271287	Bearing - Lower Clutch Gear	1
33	00-271226-00002	Sleeve - Clutch	1
34	00-012430-00182	Key 1/4 Sq. x 2 Lg	2
35	00-271236	Gear - Upper Clutch (33T)	1
36	00-271285	Bearing - Upper Clutch Drive	1
37	00-271234	Gear - Bevel (45T)	1
38	00-271234-00002	Gear - Bevel (45T) (Starting with Serial No. 31-1101-889, 01/13/97)	1
39	00-271233	Gear - Roller Clutch (SST)	1
40	00-271289	Spring - Roller	10
41	00-271288	Roller - Clutch	10
42	00-271279	Sleeve - Drive	1
43	00-109070-00028	Key	1
44	00-271286	Spacer - Planetary Shaft	1
45	00-271229	Planetary Shaft	1
46	WS-030-25	Washer (0.002 Thk.)	AR
47	WS-030-26	Washer (0.003 Thk.)	AR
48	WS-030-27	Washer (0.010 Thk.)	AR
49	BB-021-22	Ball Bearing (SKF 5205A2ZNRC3)	1
50	WL-012-06	Lockwasher N.D. #W-05	1
51	NS-034-06	Lock Nut - Bearing	1
52	WL-012-04	Lockwasher	1
53	NS-034-04	Lock Nut	1
54	00-271341	Seal - Planetary Shaft	1
	00-437603	Planetary Shaft & Gear Assy. (Incls. Items 27 thru 32 & 45)	1
	00-274039	Center Shaft Assy. (Incls. Items 16 thru 26)	1

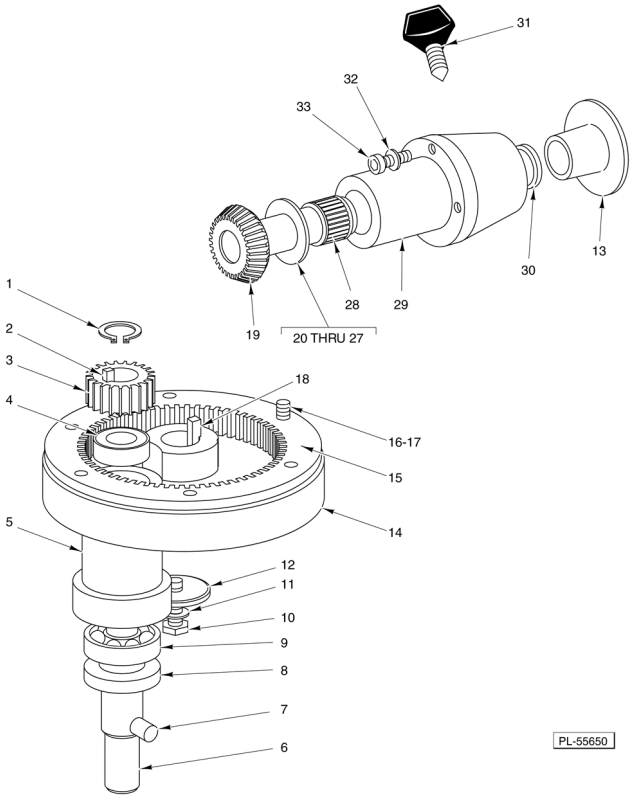

PLANETARY AND ATTACHMENT HUB

PLANETARY AND ATTACHMENT HUB

ILLUS. PL-55650	PART NO.	NAME OF PART	AMT.
1	RR-009-19	Retaining Ring	1
2	00-012430-00180	Key 1/4 Sq. x 13/6 Lg	1
3	00-435548	Pinion - Agitator Shaft (18T)	1
4	BB-021-34	Ball Bearing	1
5	00-438240-00002	Planetary (Painted)	1
6	00-438229	Agitator Shaft Assy. (Incls. Item 7)	1
7	00-070019	Pin - Agitator	1
8	00-439286	Seal - Agitator Shaft	1
9	BB-021-35	Ball Bearing	1
10	SC-062-58	Cap Screw 3/8-24 x 11/4 Hex Hd	1
11	WL-006-27	Lockwasher 3/8 Light (SST)	1
12	00-070047-00001	Washer - Planetary	1
13	00-114824-00001	Plug - Attachment Hub	1
14	00-437708	NLA - Obsolete--Cup - Planetary Drip	1
15	00-439291-00002	Gear - Internal (59T)	1
16	SC-089-19	Cap Screw 5/16-18 x 13/8 Soc. Hex Hd	6
17	WL-003-48	Lockwasher 5/16 High Collar	6
18	00-012430-00173	Key 1/4 Sq. x 2-1/4 Lg	1
19	00-271324-00002	Attachment Drive Gear (34T) & Expansion Plug Assy	1
20	00-070045-00002	Washer - Thrust (0.119 Thk.)	AR
21	00-070045-00003	Washer - Thrust (0.121 Thk.)	AR
22	00-070045-00004	Washer - Thrust (0.123 Thk.)	AR
23	00-070045-00005	Washer - Thrust (0.127 Thk.)	AR
24	00-070045-00001	Washer - Thrust (0.125 Thk.)	AR
25	00-070045-00006	Washer - Thrust (0.129 Thk.)	AR
26	BN-005-09	Needle Bearing (Torrington TRB 1828)	1
27	BN-005-10	Needle Bearing (Torrington NTA-1828)	1
28	BN-002-12	Needle Bearing	2
29	00-070511-00003	Attachment Hub & Bearing Assy. (Incls. Item 28)	1
30	00-070090	Seal - Attachment Hub	1
31	00-108197-00001	Thumb Screw 1-1/4	1
32	WL-003-43	Lockwasher 5/16 Light	3
33	SC-040-50	Cap Screw 5/16-18 x 21/4 Soc. Hex Hd	3
	00-438230	Planetary Assy. (Incls. Items 1 thru 6, 8, & 9)	1

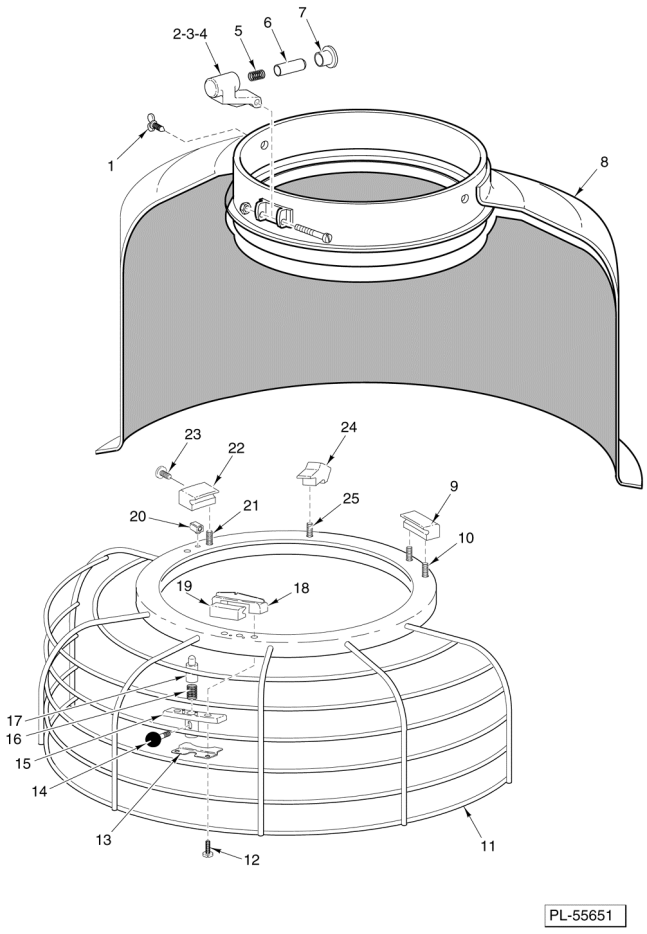

BOWL GUARD UNIT

BOWL GUARD UNIT

ILLUS. PL-55651	PART NO.	NAME OF PART	AMT.
1	00-070641-00011	Thumb Screw 8-32 Special	3
2	00-479006	Latch - Cage Detent	1
3	00-478602	Screw - Shoulder	1
4	NS-031-50	Nut - Stop Special 6-32 Hex (SST)	1
5	00-437446-00001	Spring - Cage Detent	1
6	00-437724	Plunger - Detent	1
7	00-437725	Bushing - Detent	1
8	00-437792	NLA - Obsolete--Splash Guard & Drip Cup Assy. (Painted)	1
9	00-437713	Shoe - Fixed	1
10	SC-122-45	Mach. Screw - Special 1/4-20 x 3/8 Truss Hd. (SST)	2
11	00-437822	NLA - Obsolete--Wire Cage Assy	1
12	SC-122-46	Mach. Screw - Special 1/4-20 x 3/4 Truss Hd. (SST)	2
13	00-437817	Stop - Cage	1
14	00-437436	Pin - Plunger	1
15	00-437799	Housing - Plunger	1
16	00-437446-00002	Spring - Cage On/Off	1
17	00-437432	Plunger	1
18	00-437718-00002	Saddle - Shoe	1
19	00-437715	Shoe - Saddle	1
20	00-437720	Key - Shoe	1
21	SC-122-45	Mach. Screw - Special 1/4-20 x 3/8 Truss Hd. (SST)	2
22	00-437714	Shoe - Adjustable	1
23	SC-122-44	Mach. Screw - Special 8-32 x 3/8 Truss Hd. (SST)	1
24	00-437805	Retainer - Magnet	1
25	SC-122-44	Mach. Screw - Special 8-32 x 3/8 Truss Hd. (SST)	1
	00-438608	Ingredient Chute	1

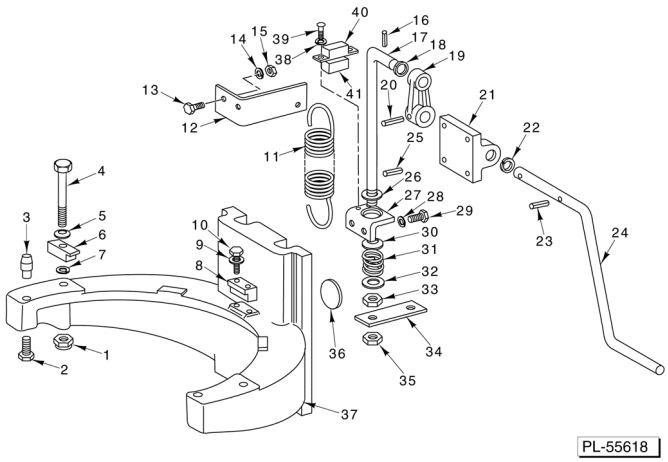

BOWL LIFT UNIT

BOWL LIFT UNIT

ILLUS. PL-55618	PART NO.	NAME OF PART	AMT.
1	NS-032-13	Lock Nut 5/16-18 Flexloc	2
2	SC-037-75	Cap Screw 5/16-18 x 3/4 Hex Hd	2
3	00-070411	Pin - Bowl Locating	2
4	SC-062-28	Cap Screw 5/16-18 x 3-1/2 Hex Hd	2
5	00-070087	Washer - Spring	2
6	00-070057	Clamp - Bowl	2
7	WS-004-18	Washer	2
8	00-070044	Retainer - Bowl	1
9	WL-006-16	Lockwasher 1/4 Light (SST)	2
10	SC-036-09	Cap Screw 1/4-20 x 11/4 Hex Hd	2
11	00-271342	Spring - Counterbalance	1
12	00-271345	Bracket - Spring	1
13	SC-036-06	Cap Screw 1/4-20 x 1 Hex Hd	2
14	WL-006-16	Lockwasher 1/4 Light (SST)	2
15	NS-013-02	Nut 1/4-20 Hex	2
16	RP-002-25	Roll Pin 1/8 Dia. x 7/8 Lg	1
17	00-068718	Rod - Bowl Lift	1
18	WS-008-47	Washer	1
19	00-271259-00002	Arm - Bowl Lift	1
20	RP-002-26	Roll Pin 1/4 Dia. x 1 1/8 Lg	1
21	00-271269-00002	Bearing - Bowl Lift Handle	1
22	WS-020-01	Washer (SST)	1
23	RP-002-25	Roll Pin 1/8 Dia. x 7/8 Lg	1
24	00-271322	Handle - Bowl Lift	1
25	RP-002-10	Roll Pin 3/16 Dia. x 1 Lg	1
26	WS-008-47	Washer	1
27	00-438576	Bracket - Lower Lift	1
28	WL-003-41	Lockwasher 5/16 Light	2
29	SC-037-75	Cap Screw 5/16-18 x 3/4 Hex Hd	2
30	00-070131	Washer - Cup Bowl Lift	1
31	00-070104	Spring - Bowl Lift	1
32	WS-008-47	Washer	1
33	NS-017-31	Jam Nut 1/2-20 Hex	1
34	00-271346	Bracket - Lower Spring Lift	1
35	NS-017-31	Jam Nut 1/2-20 Hex	1
36	00-271319	Bumper	2
37	00-435269-00003	NLA - Obsolete--Support - Bowl	1
38	WL-003-01	Lockwasher #4 Light	2
39	SC-021-01	Mach. Screw 4-40 x 1/4 Rd. Hd. (SST)	2
40	00-120332	Retainer - Magnet	1
41	00-111941	Magnet	1

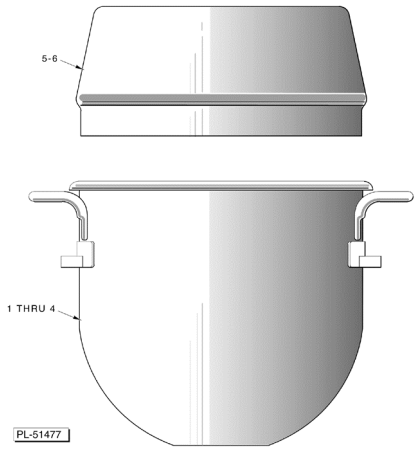

BOWL

BOWL

ILLUS. PL-51477	PART NO.	NAME OF PART	AMT.
1	00-295649	Bowl - 30 Qt. (Tinned)	1
2	00-295646	Bowl - 20 Qt. (Not Shown) (Tinned) (For Service Use 00-295647)	1
3	00-437410	Bowl - 30 Qt. (SST)	1
4	00-295647	Bowl - 20 Qt. (SST)	1
5	00-438080	Splash Cover Assy. - 30 Qt.	1
6	00-438079	Splash Cover Assy. - 20 Qt.	1

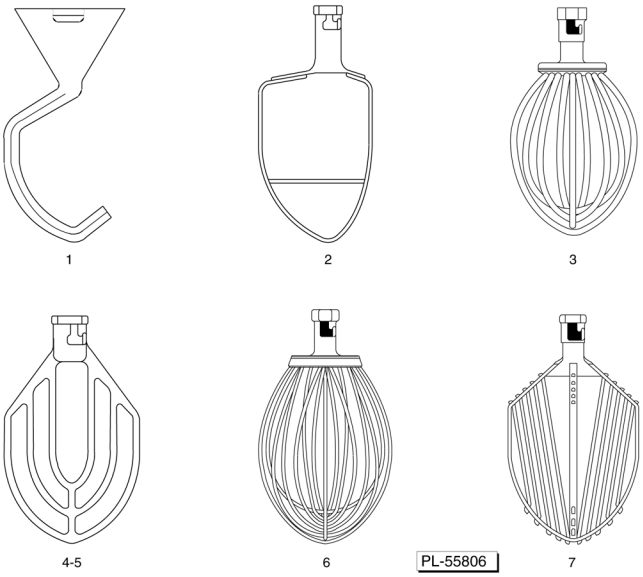

AGITATORS

AGITATORS

ILLUS. PL-51492	PART NO.	NAME OF PART	AMT.
		.....	1
1	00-295120	"E" Dough Arm (Alum.)	1
2	00-295037	"P" Pastry Knife	1
3	00-295163	"I" Wire Whip (SST)	1
4	00-275450	"B" Flat Beater (Alum.)	1
5	00-275451	"B" Flat Beater (SST)	1
6	00-275899	"D" Wire Whip (SST)	1
7	00-295161	"C" Wing Whip	1
	00-315556	"ED" Dough Arm - Spiral (Not Shown) (SST)	1
		.....	1
1	00-275465	"E" Dough Arm (Alum.)	1
4	00-275461	"B" Flat Beater (Alum.)	1
5	00-275462	"B" Flat Beater (SST)	1
6	00-295029	"D" Wire Whip (SST)	1
7	00-295164	"C" Wing Whip	1