INSTALLATION

DDU38e DIRECT DRIVE UNLOADER

for installation onto CLeN Series Dishwashers

R-L OPERATION	L-R OPERATION
ML-138209	ML-138210

with Blower Dryer

ML-138222

HOBART

701 S. RIDGE AVENUE
TROY, OHIO 45374-0001

FORM 44173 Rev. B (October 2020)

TABLE OF CONTENTS

GENERAL 3
Unpacking 3
INSTALLATION OF DDU38*e* TO STANDARD CL*e*N MACHINE 3
Location 3
Assembly 3
Leg Installation and Leveling 3
Drill Holes 4
Assemble Three Splash Guards, Apply Foam Tape, and Assemble Unloader-to-Dishwasher 5
Direct Drive Linkage 6
Assemble Dish Table to Unloader 6
Track Guide Leveling 6
Plumbing Connection 7
Drain 7
Assemble Table Limit Switch to Dishtable 7
INSTALLATION OF DDU38*e* TO BLOWER DRYER 8
Location 8
Assembly 8
Leg Installation and Leveling 8
Drill Holes 9
Assemble Unloader to Blower Dryer 9
Direct Drive Linkage 10
Assemble Dish Table to Unloader 11
Track Guide Leveling 11
Plumbing Connection 11
Drain 11
Assemble Table Limit Switch to Dishtable 12

© HOBART 2020

INSTALLATION INSTRUCTIONS

DDU38 DIRECT-DRIVE UNLOADER

GENERAL

The DDU38*e* Unloader is typically connected to the unload end of a CL*e*N dishwasher. It moves the 20" x 20" rack in a 90 degree arc onto a dish table. The Unloader uses direct linkage with the dishwasher cradle to oscillate the rack-moving mechanism.

The DDU38*e* can also be attached to the unload end of CL*e*N dishwasher with a Blower Dryer.

UNPACKING

Immediately after unpacking, check for possible shipping damage. If the Unloader is found to be damaged, save the packaging material and contact the carrier within 5 days of delivery.

INSTALLATION of DDU38*e* to STANDARD CL*e*N MACHINE

LOCATION

Place Dishwasher and Unloader as close to their final positions as possible. Make sure you leave room to drill mounting holes in end of dishwasher. Review all tags and labels but do not remove any until installation is complete. Remove any packaging, tape, wire, and bracing.

ASSEMBLY

Leg Installation and Leveling

- Loosen set screw in each leg socket underneath the unloader (Fig. 1).
- Insert the long legset into the two rear leg sockets.
- Insert the short legset into the two front leg sockets and tighten set screw in each leg socket to secure legs.
- Fill set screws with an NSF approved silicone sealant.

Make sure adjoining parts of Dishwasher and Unloader are exactly in line with each other. Turn leveling feet (on bottom of legs) in or out to adjust height and level machine. Also, refer to Track Guide Leveling.

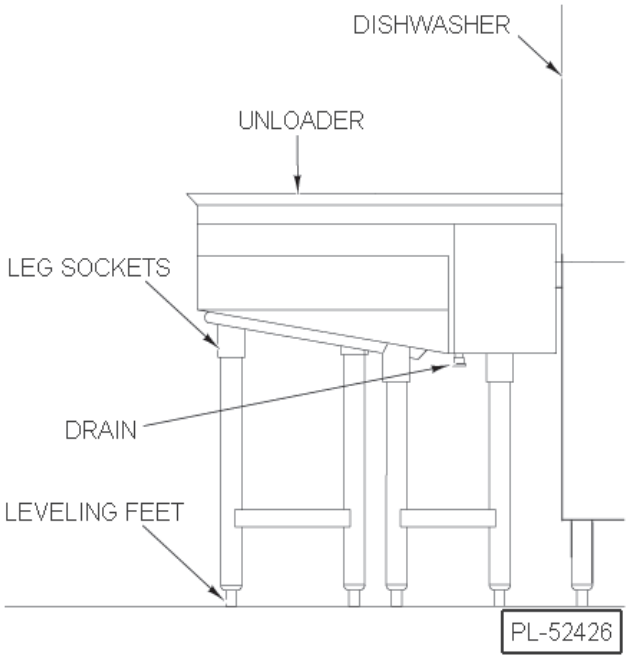

Fig. 1

Drill Holes

Using the templates provided (Fig. 2), locate and drill the necessary holes in the unload end of the dishwasher.

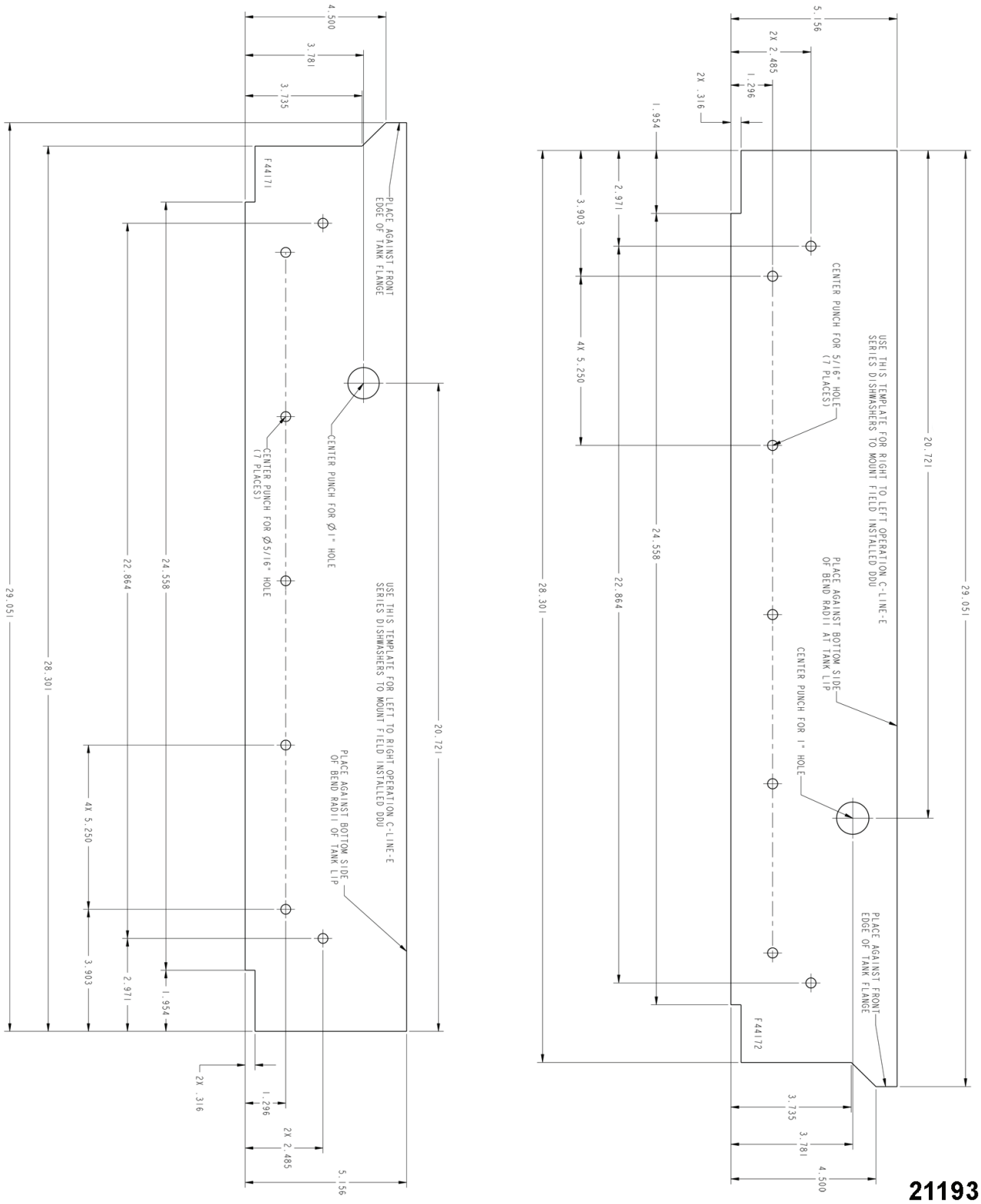

Fig. 2

Assemble Three Splash Guards, Apply Foam Tape, and Assemble Unloader-to-Dishwasher

Apply 1 1/2" foam tape (supplied) to surface of Dishwasher where Unloader and Dishwasher tank meet (Fig. 3). Assemble Unloader to end of the Dishwasher. Using holes 1 thru 6, insert 1/4"- 20 x 5/8" bolts, lockwashers, and nuts (provided).

Using the three splash guards (provided), install two of the splash guards with slotted hole between dishwasher and unloader by bolting them to the end of the dishwasher chamber (Fig. 3). Use the lowest hole on the chamber end. Assemble using two 1/4" - 20 x 5/8" screws, lockwashers, and nuts (provided).

The smaller splash guard with round holes goes inside the unloader tank near the front corner (Fig. 3). This splash guard uses hole 7. Assemble the smaller splash guard using one 1/4" - 20 x 5/8" screw, lockwasher, and nut (provided) — the screw goes through the bottom hole of the splash guard, the wall of the Unloader and Dishwasher tank.

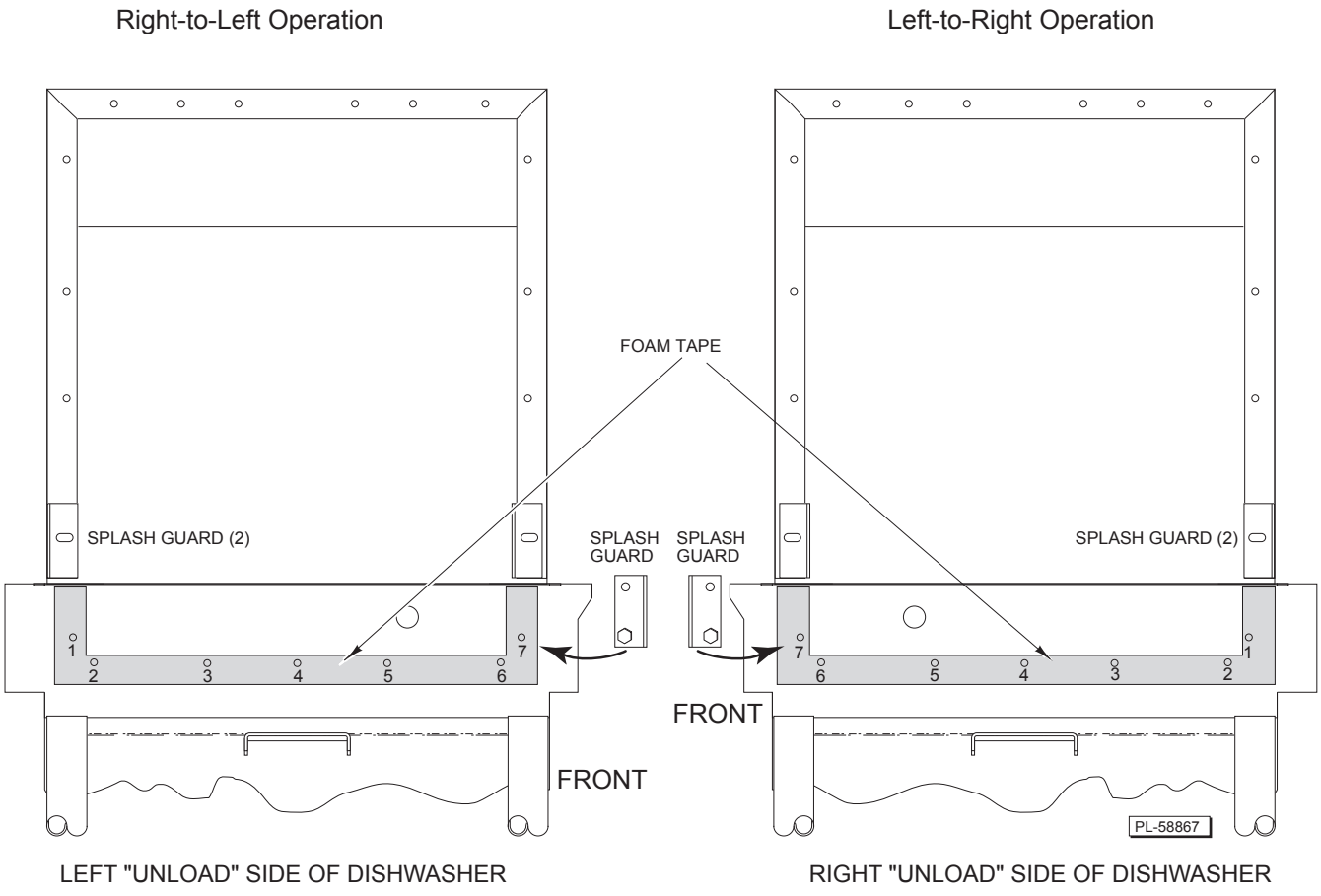

Fig. 3

Direct Drive Linkage

Assemble the linkage from the drive mechanism on the Unloader to the Cradle of the dishwasher (Fig. 4).

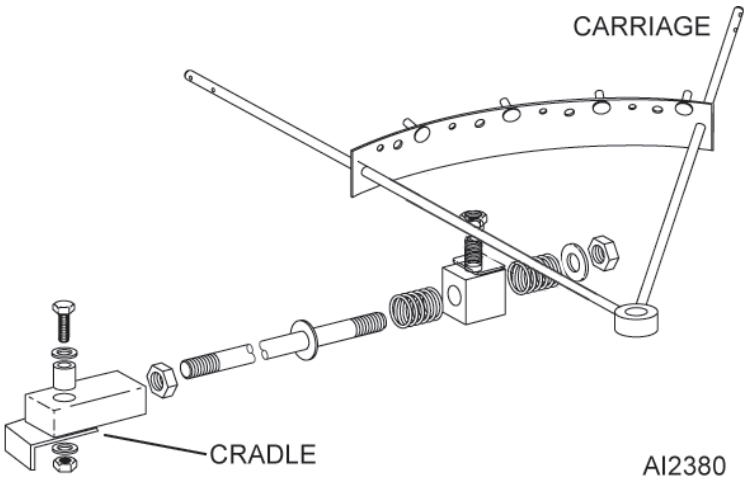

Fig. 4

The distance between the centers of the screws holding the drive rod to the Unloader and the Cradle should be 16 17/32" (Fig. 5). Tighten stop nuts. The bolt, washers, spacer, and stopnut, (provided) should be assembled through the hole in the top of the Cradle. Apply a small amount of Never-Seez® graphite lubricant (Bostick Part Number NSWT-14) on the spacer.

Left-to-Right Operation Shown

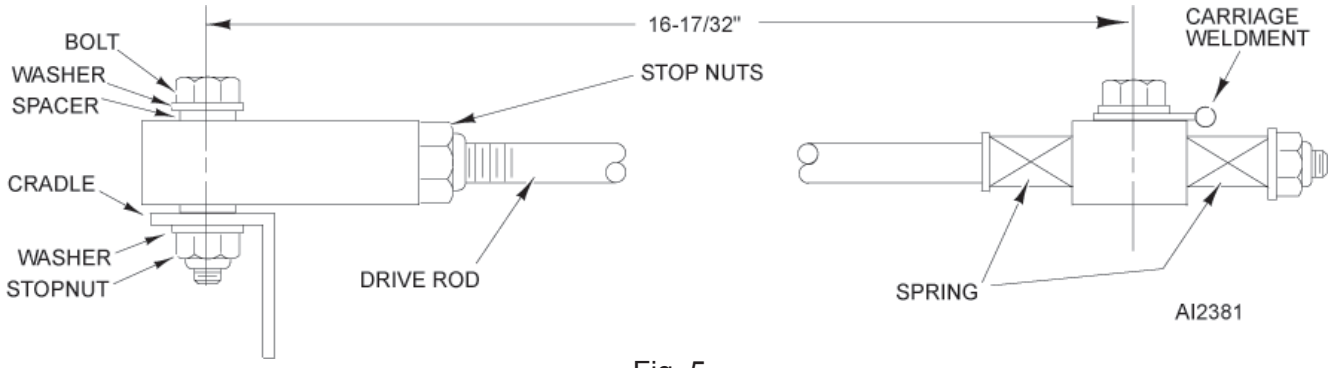

Fig. 5

Assemble Dish Table to Unloader

Assemble a suitable dish table (not included) to the discharge end of the Unloader. Use suitable fasteners, such as two or more stainless steel 5/16" - 18 x 5/8" machine screws, lockwashers, and nuts (not provided). Use silicone sealer or 1" foam tape between dish table and tank lip on Unloader to make a watertight seal. The dish table should tilt so it drains into the Unloader.

Track Guide Leveling

The track guides on which the rack rides should be even or slightly lower as the rack progresses from the Dishwasher to the Unloader and from the Unloader to the dish table.

PLUMBING CONNECTION

⚠ WARNING Plumbing connections must comply with applicable sanitary, safety and plumbing codes.

Drain

The drain fitting (1 1/2" NPT internal threads) underneath the Unloader (Fig.1) should be properly connected to a suitable drain.

Assemble Table Limit Switch to Dishtable

⚠ WARNING Electrical and grounding connections must comply with the applicable portions of the National Electrical Code and/or other Local Electrical Codes.

⚠ WARNING Disconnect electrical power supply and place a tag at the disconnect switch indicating that you are working on the circuit.

Refer to CL*e* Table Limit Switch Installation Instructions F44176 included with DDU38*e*.

For electrical connections refer to supplied electrical wiring diagram F44174 (affix on main control box lid) and installation drawings 936729 (R-L direction) or 936730 (L-R direction).

Check for proper operation.

INSTALLATION OF DDU38*e* TO BLOWER DRYER

LOCATION

Place Dishwasher with Blower Dryer and Unloader as close to their final positions as possible. Make sure you leave room to drill mounting holes in end of Blower Dryer. Review all tags and labels but do not remove any until installation is complete. Remove any packaging, tape, wire, and bracing.

ASSEMBLY

Verify the Blower Dryer is correctly installed per installation Instructions F41108 provided with the blower dryer.

Leg Installation and Leveling

- Loosen set screw in each leg socket underneath the unloader (Fig. 6).
- Insert the long legset into the two rear leg sockets.
- Insert the short legset into the two front leg sockets and tighten set screw in each leg socket to secure legs.
- Fill set screws with an NSF approved silicone sealant.

Make sure adjoining parts of Blower Dryer and Unloader are exactly in line with each other. Turn leveling feet (on bottom of legs) in or out to adjust height and level machine. Also, refer to Track Guide Leveling.

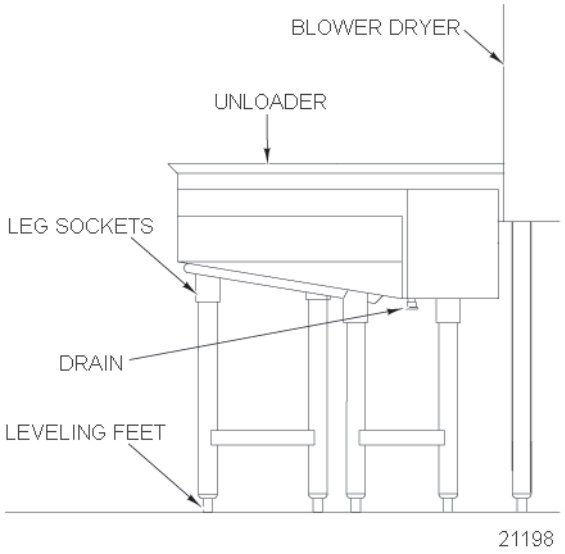

Fig. 6

Remove and discard the endplate of the blower dryer.

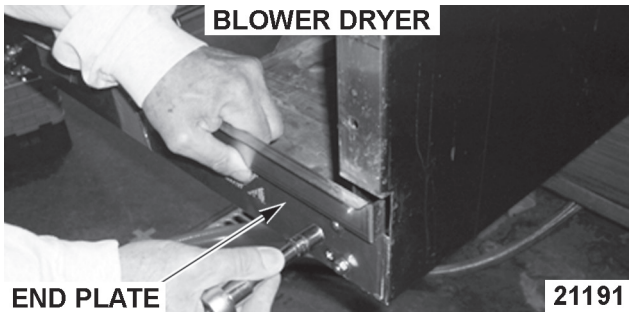

Drill Holes

Locate template F44185 on the end of the blower dryer tank.

For both L-R and R-L machines the vertical arrow points up and horizontal arrow points toward the operator side (control) of the machine.

For L-R machines use the back side of the template. You will be able to see the arrows through the paper.

Mark holes (7) with center punch to be drilled in blower/dryer tank.

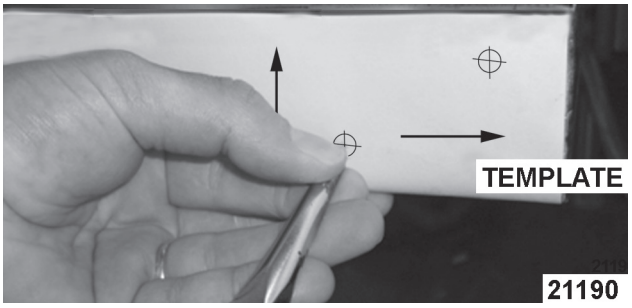

Drill (7) .312 holes, removing burrs and shavings from inside machine.

Assemble Unloader to Blower Dryer

Apply foam tape to blower dryer tank. Remove any foam tape that covers the holes drilled previously.

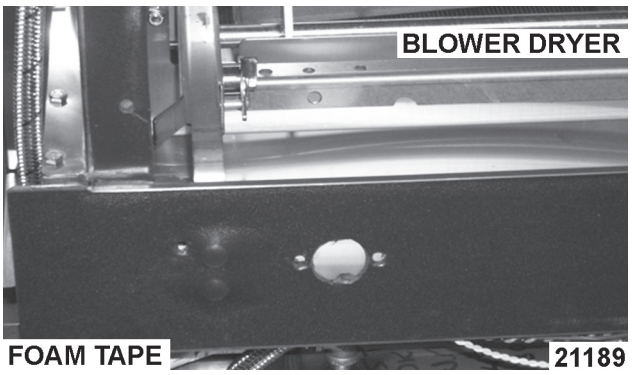

Position DDU in place and install. Adjust feet on DDU so the holes in the front and rear line up.

Assemble plate 00-936825 (for a Right to Left unit) or 00-936934 (for a Left to Right unit) to the DDU. The lip at the top of the plate is positioned toward the DDU. The plate studs will pass through the DDU.

Attach DDU to Blower/Dryer. The holes in the top of the plate will match the holes in the blower dryer tank. Use 1/4-20 hex head screws (supplied).

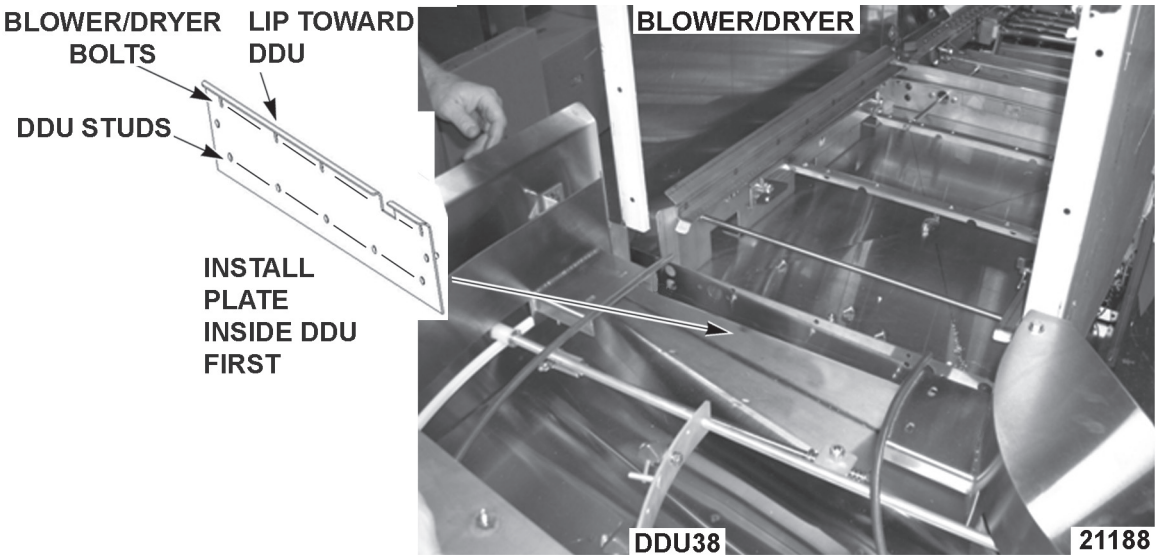

Direct Drive Linkage

Connect the linkage between the Blower Dryer and the DDU. Insert spacer (NS-015-13) between linkage and cradle to align linkage.

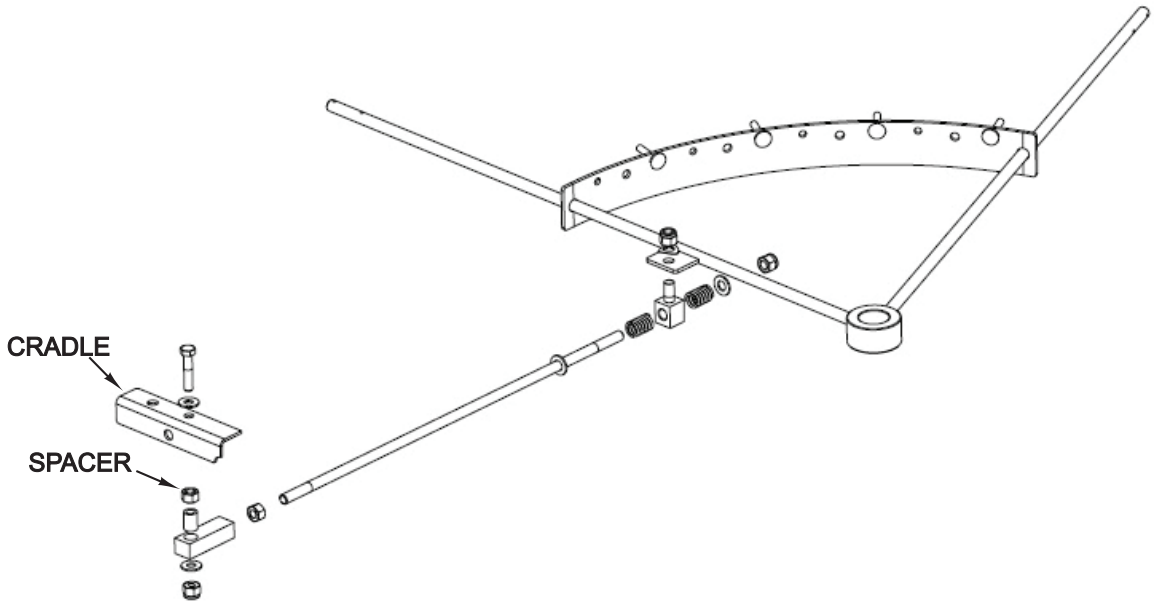

Once linkage is assembled assure all fasteners including linkage and DDU to tank are tight. These could cause malfunction of drive or tank leakage if not tight. Remove the required drive bar knockout in deflector pan to allow drive rod to pass though.

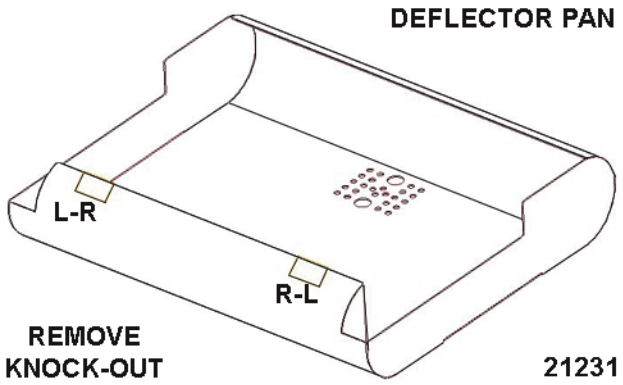

Assure drive system moves freely. There should be a small amount of free movement when the DDU is pushed and pulled. Assure the link does not rub or bind.

Assemble Dish Table to Unloader

Assemble a suitable dish table (not included) to the discharge end of the Unloader. Use suitable fasteners, such as two or more stainless steel 5/16" - 18 x 5/8" machine screws, lockwashers, and nuts (not provided). Use silicone sealer or 1" foam tape between dish table and tank lip on Unloader to make a watertight seal. The dish table should tilt so it drains into the Unloader.

Track Guide Leveling

The track guides on which the rack rides should be even or slightly lower as the rack progresses from the Dishwasher to the Unloader and from the Unloader to the dish table.

Check for proper operation.

PLUMBING CONNECTION

⚠ WARNING Plumbing connections must comply with applicable sanitary, safety and plumbing codes.

Drain

The drain fitting (1 1/2" NPT internal threads) underneath the Unloader (Fig. 6) should be properly connected to a suitable drain.

Assemble Table Limit Switch to Dishtable

⚠ WARNING Electrical and grounding connections must comply with the applicable portions of the National Electrical Code and/or other Local Electrical Codes.

⚠ WARNING Disconnect electrical power supply and place a tag at the disconnect switch indicating that you are working on the circuit.

Refer to CL*e* Table Limit Switch Installation Instructions F44176 included with DDU38**e**.

For electrical connections refer to supplied electrical wiring diagram F44174 (affix on main control box lid) and installation drawings 936729 (R-L direction) or 936730 (L-R direction).

Check for proper operation.