CATALOG OF REPLACEMENT PARTS



ELECTRIC CONVECTION OVENS
DEC1, HEC40, HEC40D, HEC60, HEC60D

DEC1
ML-43876
HEC40
ML-43877
HEC40D
ML-43878
HEC60
ML-43879
HEC60D
ML-43880

A product of HOBART 701 S. RIDGE AVENUE TROY, OHIO 45374-0001

FORM 33837 Rev. B (July 2017)

 © HOBART 2017

Table of Contents

5 OVEN L.H.
7 OVEN R.H.
9 DOOR HEC SERIES
11 DOOR DEC1
13 CONTROL PANELS
15 COMPONENT PANELS

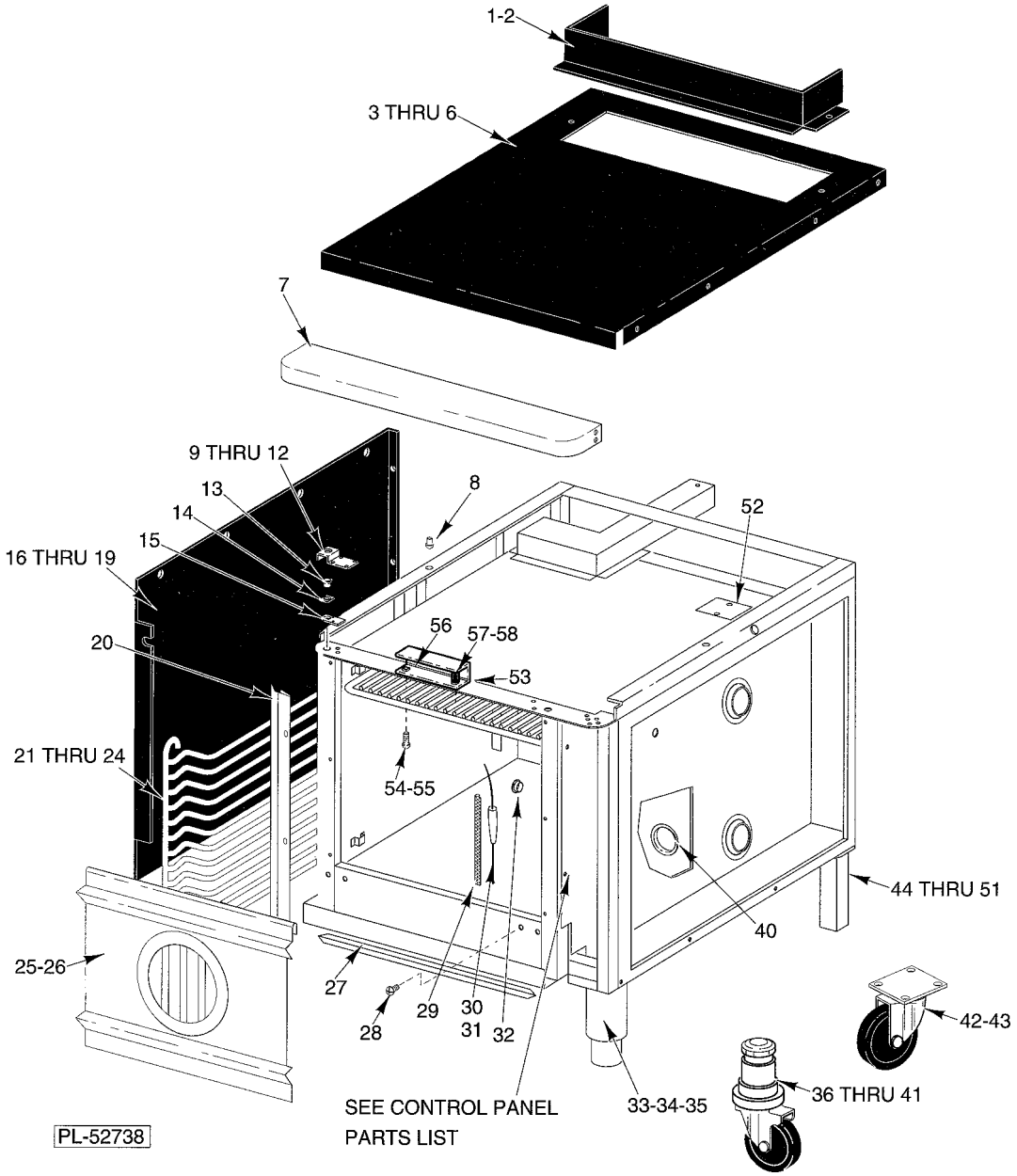
1-2
3 THRU 6
7
9 THRU 12
13
14
15
16 THRU 19
20
21 THRU 24
25-26
8
52
56
57-58
53
54-55
40
44 THRU 51
27
28
29
30
31
32
SEE CONTROL PANEL
PARTS LIST
33-34-35
36 THRU 41
42-43
PL-52738

OVEN L.H.

OVEN L.H.

ILLUS. PL-52738	PART NO.	NAME OF PART	AMT.
1	00-343516-00001	Shell - Chimney (PTD)	1
2	00-343516-00002	Shell - Chimney (SST)	1
3	00-343508-00001	Top - Rear (PTD) (HEC40/HEC40D/DEC1)	1
4	00-343508-00002	Top - Rear (SST) (HEC40/HEC40D/DEC1)	1
5	00-343508-00003	Top - Rear (PTD) (HEC60/HEC60D)	1
6	00-343508-00004	Top - Rear (SST) (HEC60/HEC60D)	1
7	00-343501-00001	Top - Front	1
8	00-339337-00001	Stud - Locating	2
9	00-353484-00001	Plate - Retainer	2
10	SC-022-40	Mach. Screw 1/4-20 x 3/4 Phil. Flat Hd	4
11	WL-019-21	Lockwasher 10 Ext	4
12	NS-046-52	Nut - 1/4-20 Hex "Keps"	4
13	00-347080-00002	Bearing - Door Shaft	2
14	00-353482-00001	Spacer	2
15	00-353483-00001	Plate - Upper Door Bearing	2
16	00-357760-00001	Panel - Outer (LH)(PTD) (HEC40/HEC40D/DEC1)	1
17	00-357760-00002	Panel - Outer (LH)(SST) (HEC40/HEC40D/DEC1)	1
18	00-359516-00001	Panel - Outer (LH)(PTD) (HEC60/HEC60D)	1
19	00-359516-00002	Panel - Outer (LH)(SST) Panel - Outer (LH)(SST)(HEC60/HEC60D)	1
20	00-357508-00001	Seal - Door (23 In. Long)	2
21	00-342141-00001	Rack - Support (LH) (HEC40/HEC40D/DEC1)	1
22	00-342141-00002	Rack - Support (RH) (HEC40/HEC40D/DEC1)	1
23	00-342141-00003	Rack - Support (LH) (HEC60/HEC60D)	1
24	00-342141-00004	Rack - Support (RH) (HEC60/HEC60D)	1
25	00-359505-00001	Blower - Baffle (Porcelain)	1
26	00-359505-00003	Blower - Baffle (SST)	1
27	00-357507-00001	Seal - Horizontal Door (30-1/2 In. Long) (Top & Bottom)	2
28	SD-034-31	Self-Tapping Screw 6-20 x 5/16 Pan Phil. Hd., Type	14
29	00-342132-00002	Guard - Thermostat Bulb	1
30	00-354319-00001	Probe Assy	1
31	00-920883-00002	Probe - Thermocouple (With 40 In. Leads) (HEC40D/HEC60D)	1
32	00-342154-00002	Plug - Thermostat	1
33	00-340445-00002	Adjustable Leg Assy. (Stand) Leg - Adjustable (6 In.)	AR
34	00-342150-00005	Leg (8 In.) Leg - Adjustable (8 In.)	AR
35	00-407729-00003	Foot - Bullet	AR
36	00-343634-00001	Caster (Swivel With Brake) (7.5 In.)	2
37	00-341655-00006	Caster (Swivel with Brake) (5 In.)	AR
38	00-353948-00002	Caster (Swivel With Brake) (6 In.)	AR
39	00-353948-00001	Caster (Swivel) (8.5 In.)	AR
40	00-410118-00017	Caster (With Brake) (6 In.)	AR
41	00-410118-00016	Caster (Rigid) (6 In.)	AR
42	00-343634-00002	Caster (Rigid) (7.5 In.)	AR
43	00-341655-00007	Caster (Rigid) (5 In.)	AR
44	00-358255-00002	Leg (20.25 In. High)	AR
45	00-358255-00001	Leg (24.5 In. High)	AR
46	00-358476-00001	NLA - Obsolete - Leg W/Foot (SST)	AR
47	00-358476-00002	NLA - Obsolete - Leg W/Caster & Brake	AR
48	00-358476-00003	NLA - Obsolete - Leg Assy. W/Caster & Brake (HGC40D/HGC60/HGC60D/DGC1)	AR
49	00-340412-00001	Brace - Leg	4
50	SD-034-70	Self-Tapping Screw 1/4-20 x 1 Slotted Hex Washer H	12
51	WS-029-49	Washer	12
52	00-346358-00002	High Limit Assy	1
53	00-355344	Channel - Latch (DEC1)	1
54	SC-114-01	Mach. Screw 10-32 x 3/8 Hex Washer Hd., Slotted	2
55	NS-046-88	Nut Assy. 10-32 Hex (DEC1)	2
56	00-411294-00001	Catch - Door (DEC1)	2
57	00-417810-00003	Spring - Compression (DEC1)	2
58	SC-022-40	Mach. Screw 1/4-20 x 3/4 Phil. Flat Hd. (SST)	2
59	00-424940-00002	Fan - Cooling (230 V.)	1

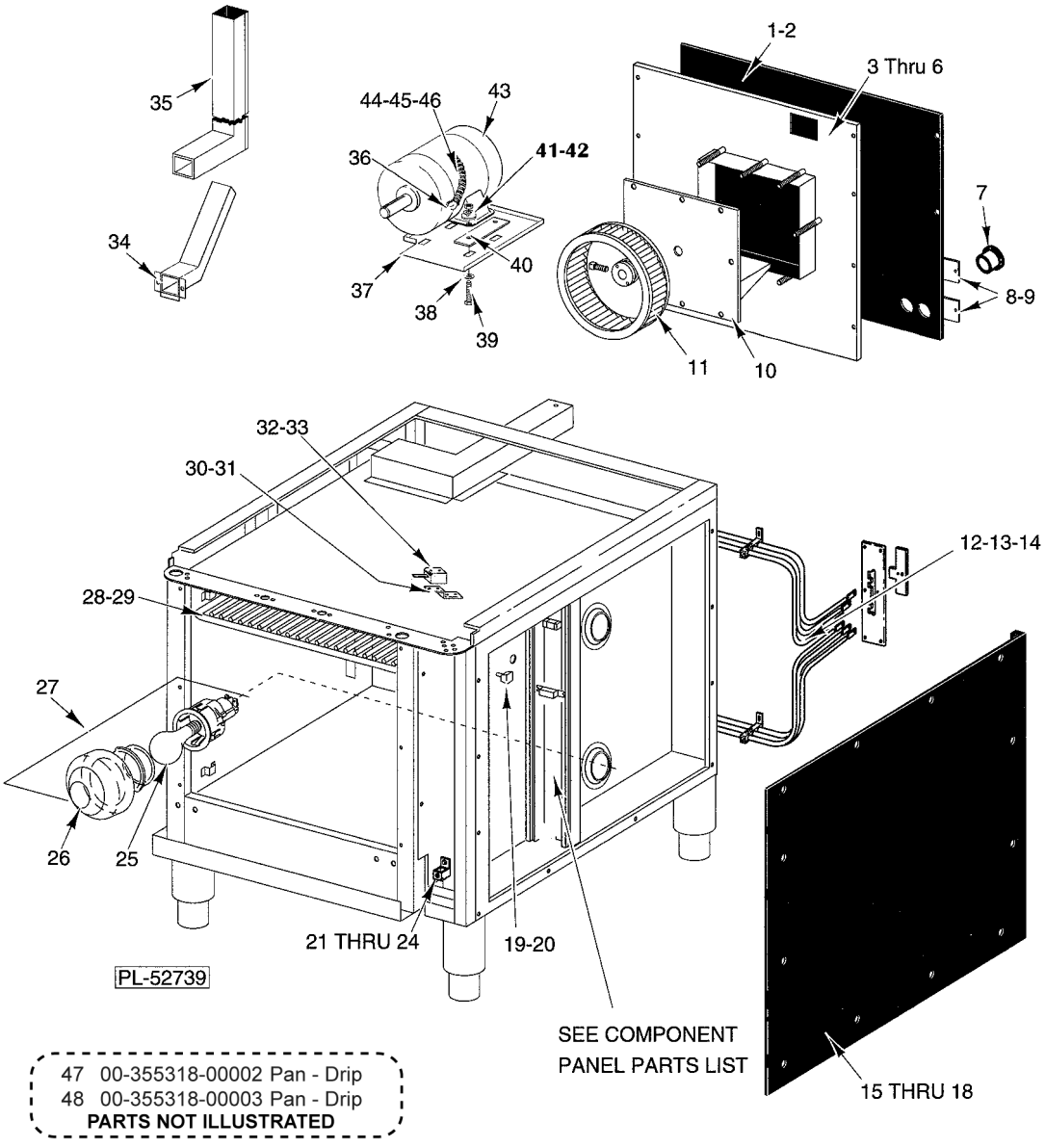
35
34
44-45-46
43
36
41-42
37
40
38
39
1-2
3 Thru 6
7
8-9
11
10
32-33
30-31
12-13-14
28-29
27
26
25
21 THRU 24
19-20
PL-52739
SEE COMPONENT
PANEL PARTS LIST
15 THRU 18
47 00-355318-00002 Pan - Drip
48 00-355318-00003 Pan - Drip
PARTS NOT ILLUSTRATED

OVEN R.H.

OVEN R.H.

ILLUS. PL-52739	PART NO.	NAME OF PART	AMT.
1	00-358473-00001	NLA - Obsolete - Panel - Back (PTD)	1
2	00-358473-00002	NLA - Obsolete - Panel - Back (SST)	1
3	00-359458-00001	NLA - Obsolete - Back - Inner Panel (PTD) (HEC40/60)	1
4	00-359458-00002	NLA - Obsolete - Back - Inner Panel (SST) (HEC40/60)	1
5	00-342196-00001	NLA - Obsolete - Back - Inner Panel (HEC40D/HEC60D)	1
6	00-359458-00001	NLA - Obsolete - Back - Inner Panel (PTD) (DEC1)	1
7	00-355023-00001	NLA - Obsolete - Bushing - Snap	1
8	00-359520-00001	NLA - Obsolete - Plate - Exhaust Cover (PTD)	1
9	00-359520-00002	NLA - Obsolete - Plate - Exhaust Cover (SST)	1
10	00-356633-00001	Motor Mount	1
11	00-358638-00001	Wheel - Blower (Incls. 5-16 UNF SST Sq. Hd. Bolt)	1
12	00-342170-00001	Coil Assy. (208/60/3/1)	1
13	00-342170-00002	Coil Assy. (240/60/3/1)	1
14	00-344865-00001	Coil Assy. (480/60/3/1)	1
15	00-358480-00001	(HEC40/HEC40D/DEC1)	1
16	00-358480-00002	Panel - Outer (RH)(SST) (HEC40/HEC40D/DEC1)	1
17	00-359515-00001	NLA - Obsolete - Panel - Outer (RH)(PTD) (HEC60/HEC60D)	1
18	00-359515-00002	NLA - Obsolete - Panel - Outer (RH)(SST) (HEC60/HEC60D)	1
19	00-341564-00003	Handle - Slide	1
20	00-343499-00001	Slide & Rod (Vent)	1
21	00-417856-00001	Lug - Grounding (With Set Screw)	1
22	00-345186-00001	NLA - Obsolete--Ground Screw	1
23	00-359519-00001	Bracket - Lug	1
24	SD-034-49	Self-Tapping Screw 8-32 x 1/2 Hex Washer Hd., Type T	1
25	00-342766-00001	Lamp - Oven (40 Watts) (120 V.) (Previous Construction)	2
26	00-357036-00003	Lens - Lamp	2
27	00-357036-00001	Oven Lamp (40 Watts) (120-130 V.) (Incls. items 25 & 26)	2
28	00-342142-00001	Rack Assy. (28 x 20.5 In.)	AR
29	00-342142-00002	Rack Assy. (HEC60/HEC60D)	1
30	00-343509-00001	Bracket - Door Switch	1
31	SD-034-47	Self-Tapping Screw 6-32 x 1 Hex Washer Hd., Type T	2
32	00-342147-00001	Switch - Door	1
33	SD-034-62	Self-Tapping Screw 10-32 x 1/2 Hex Washer Hd., Type T	2
34	00-343599-00001	NLA - Obsolete - Vent Extension - Short	1
35	00-342211-00001	NLA - Obsolete - Vent Extension Assy	1
36	FE-002-52	Connector - Conduit 3/8 TS 90 Degree	1
37	00-345523-00001	NLA - Obsolete - Baffle - Motor	1
38	WS-029-49	Washer	4
39	SC-113-65	Cap Screw 5/16-18 x 1-1/4 Hex Hd	4
40	00-358723-00001	NLA - Obsolete - Spacer - Steel	2
41	NS-046-86	Nut Assy. 5/16-18 KEPS Hex	4
42	WS-029-49	Washer	4
43	00-358516-00002	Motor 1/2 Hp. (2-Speed) (208-240 V., 50/60 Hz., 1 Ph.)	1
44	00-342285-00001	Bushing - Plastic	2
45	FE-006-05	Lock Nut 1/2	1
46	00-342151-00001	NLA - Obsolete - Conduit	1
47	00-355318-00002	NLA - Obsolete - Drip Pan (HEC40/HEC40D/DEC1)	1
48	00-355318-00003	NLA - Obsolete - Drip Pan (HEC60/HEC60D)	1

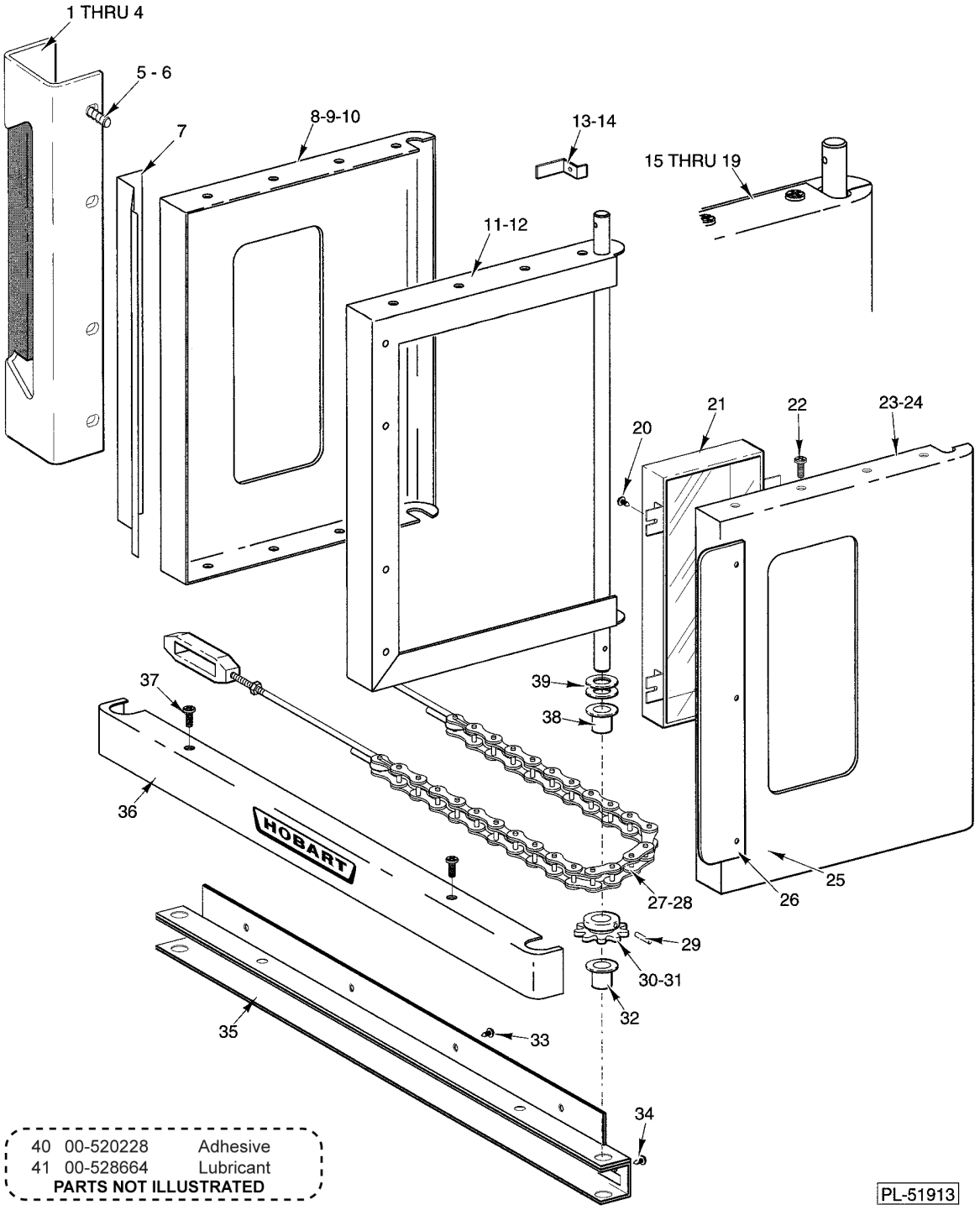

DOOR HEC SERIES

DOOR HEC SERIES

ILLUS. PL-51913	PART NO.	NAME OF PART	AMT.
1	00-356562-00001	Handle - Door	1
2	00-356563-00001	Grip - Front	1
3	00-356563-00002	Grip - Rear	1
4	SC-113-98	Mach. Screw 10-24 x 1/2 Hex Washer Hd	3
5	SC-041-01	Cap Screw 1/4-20 x 3/4 Hex Hd	4
6	WL-019-37	Lockwasher 1/4 Int	4
7	00-356550-00001	Latch - Friction	1
8	00-358545-00001	NLA - Obsolete - Shell - Outer Door (LH)(W/Window)	1
9	00-358545-00002	NLA - Obsolete - Shell-Outer Door (LH) (W/O Window)	1
10	00-358549-00001	NLA - Obsolete - Shell-Outer Door (RH) (Solid)	1
11	00-358551-00001	NLA - Obsolete - Frame Assy. - Door (LH)	1
12	00-358552-00001	NLA - Obsolete - Frame Assy. - Door (RH)	1
13	00-356253-00001	Lever - Switch	1
14	SD-034-52	Self-Tapping Screw 8-32 x 1 Hex Washer Hd., Type T	1
15	00-358544-00001	Door Assy. (LH)(W/Window)	1
16	00-358544-00002	Door Assy. (LH)(W/Window)	1
17	00-358548-00001	NLA - Obsolete - Door Assy. (RH) (W/Window)	1
18	00-358543-00001	NLA - Obsolete - Door Assy. (W/Window)	1
19	00-358543-00002	NLA - Obsolete - Door Assy. (W/O Window)	1
20	SD-034-62	Self-Tapping Screw 10-32 x 1/2 Hex Washer Hd., Type T	4
21	00-358534-00002	NLA - Obsolete Window Assy	1
22	00-350543-00006	Self-Tapping Screw 10-32 x 1/2	9
23	00-358546-00001	NLA - Obsolete - Shell - Inner Door (W/Window)	1
24	00-358550-00001	Shell - Inner Door (Solid)	1
25	00-350543-00006	Self-Tapping Screw 10-32 x 1/2	3
26	00-357837-00001	Seal - Door End	1
27	00-343608-00002	Door Chain & Turnbuckle Assy	2
28	00-352667-00001	Cable - Door Stop	1
29	PS-004-11	Spirol Pin 3/16 x 1-1/4	2
30	00-342166-00001	Sprocket - Door Shaft	2
31	SC-047-28	Set Screw 1/4-28 x 3/8 Hex Hdls. Cup Pt	2
32	00-347080-00002		2
33	SC-022-40	Mach. Screw 1/4-20 x 3/4 Phil. Flat Hd	4
34	SC-113-90	Mach. Screw 1/4-20 x 3/4 Hex Hd	2
35	00-357846-00001	Channel - Door Sill Weldment	1
36	00-358558-00001	NLA - Obsolete - Front Cover - Door Sill	1
37	SD-034-59	Self-Tapping Screw 10-32 x 3/8 Phil. Pan Hd., Type T	2
38	00-347080-00002	Bearing - Door Shaft	2
39	00-343143-00001	Washer	4
40	00-520228	Adhesive (Loctite #242, Blue) (Use W/Item 31)(50 cc Bottle)	AR
41	00-528664	Lubricant (Use W/Item 20) (Pint Can) Lubricant (Use W/Item 27)(Pint Can)	AR

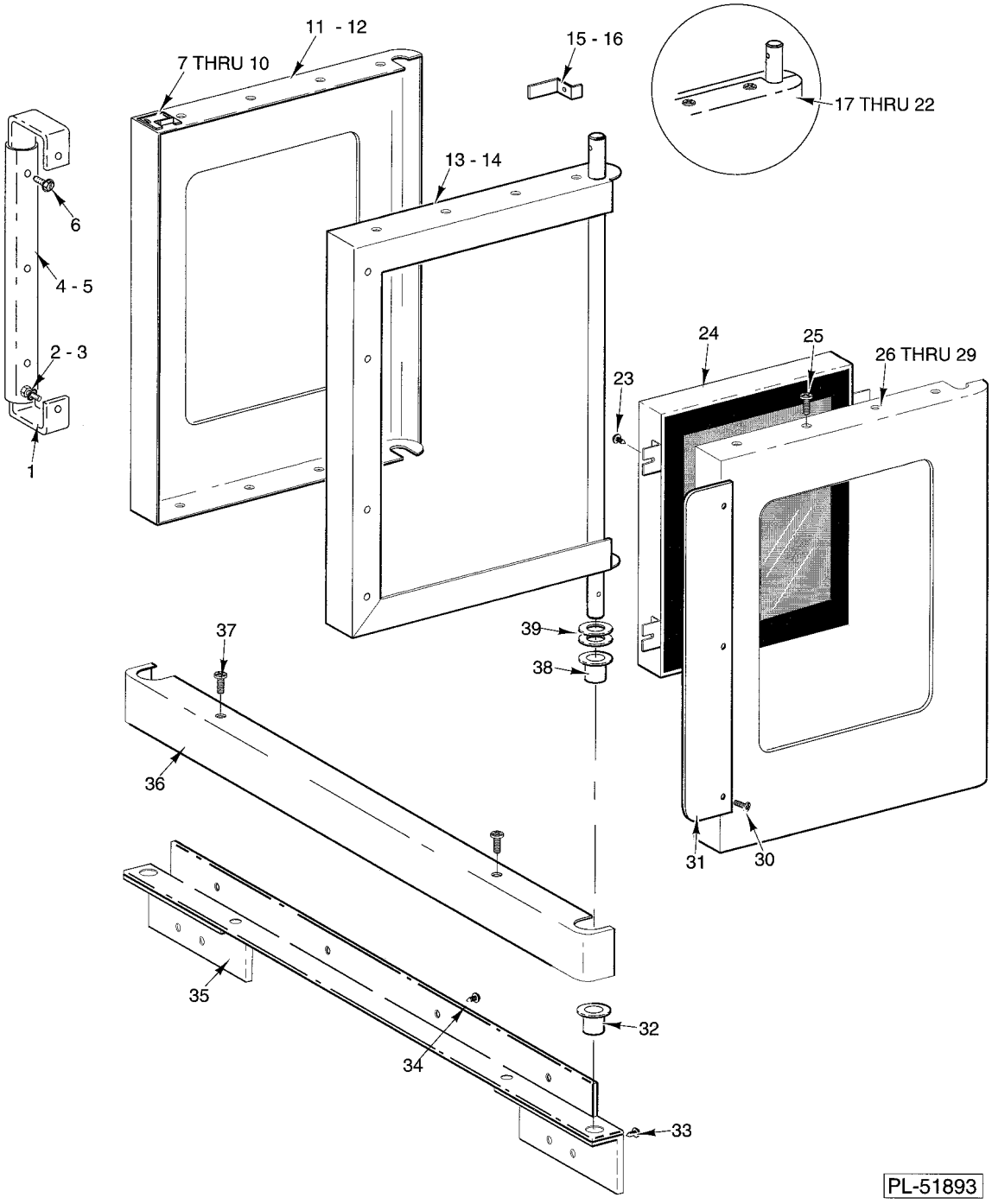
11 - 12
7 THRU 10
15 - 16
17 THRU 22
13 - 14
6
4 - 5
2 - 3
1
24
25
26 THRU 29
23
37
39
38
36
31
30
35
32
34
33
PL-51893

DOOR DEC1

DOOR DEC1

ILLUS. PL-51893	PART NO.	NAME OF PART	AMT.
1	00-357929-00001	Handle - Door	1
2	SC-041-01	Cap Screw 1/4-20 x 3/4 Hex Hd	2
3	WL-019-37	Lockwasher 1/4 Int	2
4	00-356563-00001	Grip - Front	1
5	00-356563-00002	Grip - Rear	1
6	SC-113-98	Mach. Screw 10-24 x 1/2 Hex Washer Hd	3
7	00-357877-00001	Shim - Door Strike	2
8	00-358542-00001	Strike - Door	1
9	00-350543-00006	Self-Tapping Screw 10-32 x 1/2	2
10	WL-019-35	Lockwasher 10 Int	2
11	00-358600-00001	Panel - Outer Door (RH) (W/Window)	1
12	00-358600-00002	Panel - Outer Door (RH) (W/O Window)	1
13	00-421905-000G1	Frame Assy. - Door (RH)	1
14	00-421904-000G1	Frame Assy. - Door (L.H.)	1
15	00-356253-00001	Lever - Switch	1
16	SD-034-52	Self-Tapping Screw 8-32 x 1 Hex Washer Hd., Type T	1
17	00-358597-00001	NLA - Obsolete - Door Assy	1
18	00-358597-00002	NLA - Obsolete - Door Assy	1
19	00-358598-00001	Door Assy. (LH)(W/Window) (Incls. items 7 thru 11, 14, 23, 24, 25, 27, 30 & 31)	1
20	00-358598-00002	NLA - Obsolete - Door Assy. (LH)(W/O Window)	1
21	00-358599-00001	Door Assy. (RH)(W/Window) (Incls. items 7 thru 11, 13, & 23 thru 26)	1
22	00-358599-00002	NLA - Obsolete - Door Assy. (RH)(W/O Window)	1
23	SD-034-62	Self-Tapping Screw 10-32 x 1/2 Hex Washer Hd., Type T	4
24	00-358534-00002	NLA - Obsolete Window Assy	1
25	00-350543-00006	Self-Tapping Screw 10-32 x 1/2	7
26	00-358532-00002	Shell - Inner Door (W/Window)(RH)	1
27	00-358532-00001	Panel - Inner Door (W/Window)	1
28	00-358533-00004	Shell - Inner Door (Solid)(RH)	1
29	00-358533-00003	Panel - Inner Door (W/O Window)	1
30	00-350543-00006	Self-Tapping Screw 10-32 x 1/2	3
31	00-357837-00001	Seal - Door End	1
32	00-347080-00002	Bearing - Door Shaft	1
33	SC-113-90	Mach. Screw 1/4-20 x 3/4 Hex Hd	1
34	SC-022-40	Mach. Screw 1/4-20 x 3/4 Phil. Flat Hd	4
35	00-357873-00001	NLA - Obsolete - Sill - Bottom Weldment	1
36	00-358558-00001	NLA - Obsolete - Front Cover - Door Sill	1
37	SD-034-59	Self-Tapping Screw 10-32 x 3/8 Phil. Pan Hd., Type T	2
38	00-347080-00002	Bearing - Door Shaft	1
39	00-343143-00001	Washer	4

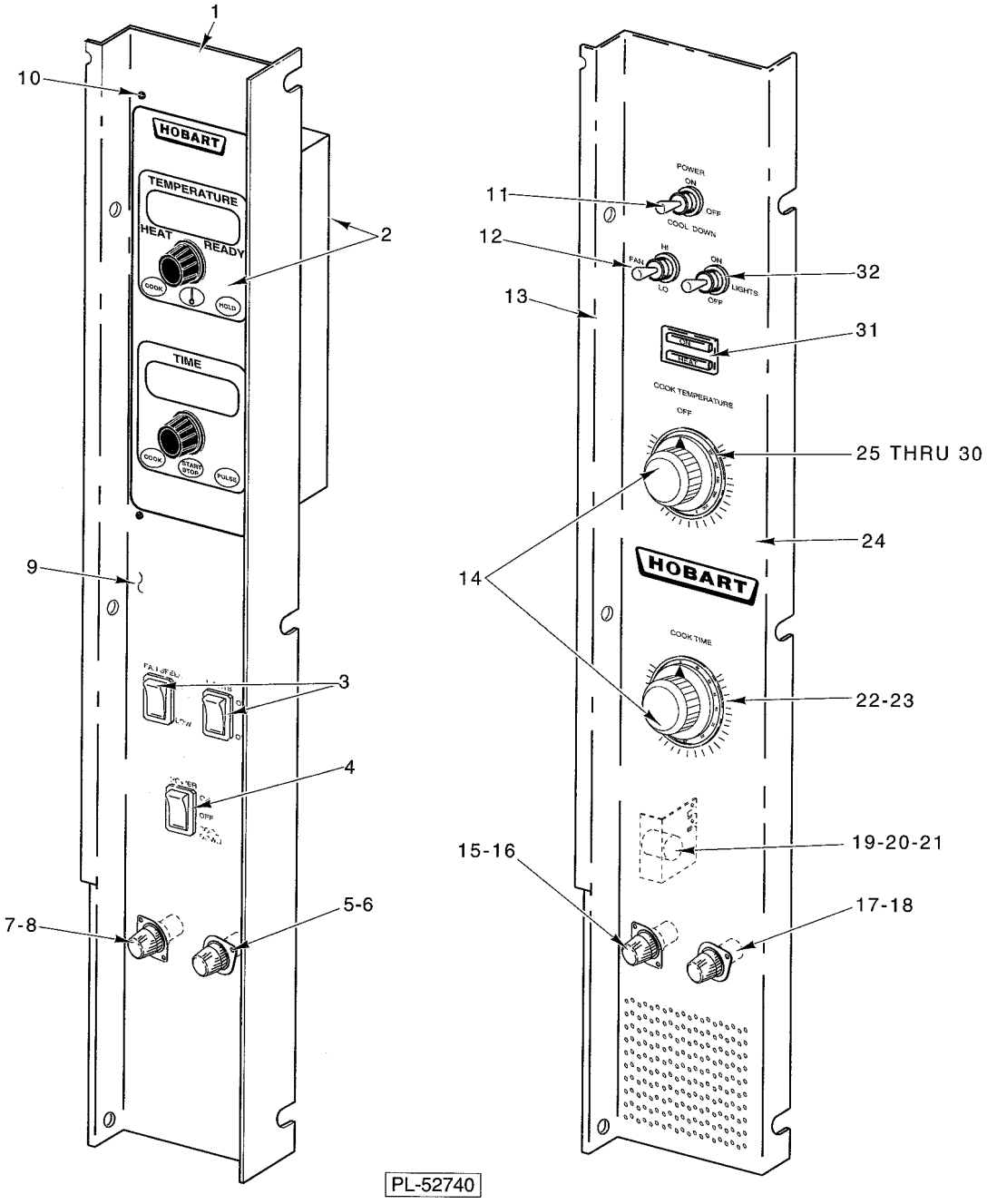

CONTROL PANELS

CONTROL PANELS

ILLUS. PL-52740	PART NO.	NAME OF PART	AMT.
1	00-359420-00001	NLA - Obsolete - Panel - Control	1
2	00-355903-00005	Controller (With Cook, Hold , & Pulse)	1
3	00-358628-00001	Switch - Rocker (3-Position)	2
4	00-358628-00002	Switch - Rocker (2-Position)	1
5	FE-019-40	Fuse 300V, 15A	2
6	FE-023-55	Holder - Fuse (300 V., 15A)	2
7	SC-114-27	Mach. Screw 8-32 x 1/2 Phil. Pan Hd	4
8	NS-046-51	Nut Assy. 8-32 Hex	4
9	00-359418-00001	Overlay - Panel	1
10	NS-011-07	Nut 6-32 Hex (SST)	4
11	00-340324-00008	Switch (4P.D.T.)	1
12	00-340324-00009	Switch (D.P.D.T.)	1
13	00-359436-00001	NLA - Obsolete - Panel - Control	1
14	00-411242-00001	Knob	2
15	SC-114-27	Mach. Screw 8-32 x 1/2 Phil. Pan Hd	4
16	NS-046-51	Nut Assy. 8-32 Hex	4
17	FE-019-40	Fuse 300V, 15A	2
18	FE-023-55	Holder - Fuse (300 V., 15A)	2
19	00-411499-00003	Buzzer (230 V.)	1
20	SD-034-49	Self-Tapping Screw 8-32 x 1/2 Hex Washer Hd., Type T	1
21	WL-014-10	Lockwasher 1/4 External Shakeproof	1
22	00-358538-00001	Plate - Dial Timer	1
23	00-411690-00002	Timer (200-240 V.) (60 Hz.) (1-Hr.)	1
24	00-359373-00001	Overlay	1
25	00-358539-00002	Plate - Dial Temperature (Centigrade)	1
26	00-358539-00001	Plate - Temperature Dial (Fahrenheit) (HEC40/HEC60)	1
27	00-353613-00002	Controller - Temperature (500 Deg.) (HEC40/HEC60)	1
28	00-411506-00003	Thermostat (DEC1)	1
29	SC-114-83	Mach. Screw 6-32 x 1/4 Slotted Pan Hd. (SST)	2
30	WS-028-20	Washer (SST)	2
31	00-354575-00001	Light Indicator (On/Heat) (200-240V)	1
32	00-340324-00012	Switch (S.P.S.T.)	1

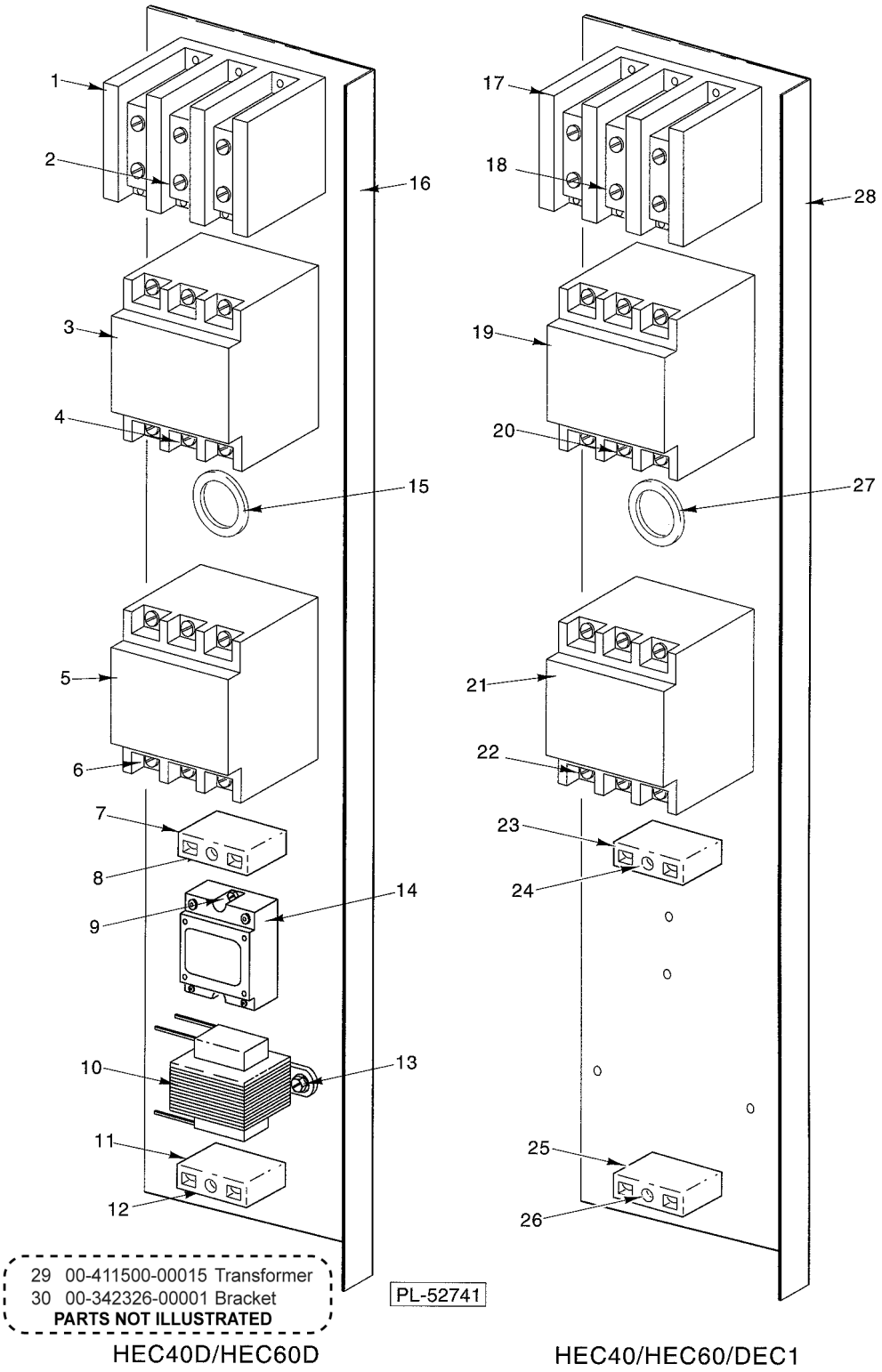

COMPONENT PANELS

COMPONENT PANELS

ILLUS. PL-52741	PART NO.	NAME OF PART	AMT.
1	00-410472-00008	Block - Terminal (3-Pole)	1
2	SD-034-62	Self-Tapping Screw 10-32 x 1/2 Hex Washer Hd., Type T	2
3	00-411497-000C5	Contactor (3-Pole)	1
4	SD-034-62	Self-Tapping Screw 10-32 x 1/2 Hex Washer Hd., Type T	2
5	00-411497-000C5	Contactor (3-Pole)	1
6	SD-034-62	Self-Tapping Screw 10-32 x 1/2 Hex Washer Hd., Type T	2
7	00-417934-000G1	Block Assy. - Porcelain	1
8	SD-034-52	Self-Tapping Screw 8-32 x 1 Hex Washer Hd., Type T	1
9	SD-034-49	Self-Tapping Screw 8-32 x 1/2 Hex Washer Hd., Type T	2
10	00-358629-00001	Transformer (6/12/120VAC)	1
11	00-417934-000G1	Block Assy. - Porcelain	1
12	SD-034-52	Self-Tapping Screw 8-32 x 1 Hex Washer Hd., Type T	1
13	SD-034-59	Self-Tapping Screw 10-32 x 3/8 Phil. Pan Hd., Type T	2
14	00-821875-00002	Relay - Solid State (50 Amp.)	1
15	00-350660-00010	Bushing	1
16	00-359506-00001	NLA - Obsolete - Panel - Component	1
17	00-410472-00008	Block - Terminal (3-Pole)	1
18	SD-034-62	Self-Tapping Screw 10-32 x 1/2 Hex Washer Hd., Type T	2
19	00-411497-000C5	Contactor (3-Pole)	1
20	SD-034-62	Self-Tapping Screw 10-32 x 1/2 Hex Washer Hd., Type T	2
21	00-411497-000C5	Contactor (3-Pole)	1
22	SD-034-62	Self-Tapping Screw 10-32 x 1/2 Hex Washer Hd., Type T	2
23	00-417934-000G1	Block Assy. - Porcelain	1
24	SD-034-52	Self-Tapping Screw 8-32 x 1 Hex Washer Hd., Type T	1
25	00-417934-000G1	Block Assy. - Porcelain	1
26	SD-034-52	Self-Tapping Screw 8-32 x 1 Hex Washer Hd., Type T	1
27	00-350660-00010	Bushing	1
28	00-359506-00001	NLA - Obsolete - Panel - Component	1
29	00-411500-00015	Transformer (480 V. to 240 V.)	1
30	00-342326-00001	NLA - Obsolete - Bracket	1