# CATALOG OF REPLACEMENT PARTS




## EDGE-12 SLICER

**ML-136247**

**A product of HOBART 701 S. RIDGE AVENUE TROY, OHIO 45374-0001**

**FORM 43261 Rev. C (August 2016)**

 © HOBART 2016

## Table of Contents


5 COVER PAGE - EDGE 12
7 ELECTRICAL COMPONENTS
9 TRANSMISSION, KNIFE, AND BASE ASSEMBLY
11 GAUGE PLATE AND INDEX ASSEMBLY
13 CARRIAGE ASSEMBLY
15 PRODUCT TRAY AND MEAT GRIP
17 SHARPENER ASSEMBLY

HOBART

# CATALOG OF REPLACEMENT PARTS




## EDGE-12 SLICER

**ML-136247**

**A product of HOBART 701 S. RIDGE AVENUE TROY, OHIO 45374-0001**

**FORM 43261**

**COVER PAGE - EDGE 12**

## COVER PAGE - EDGE 12

| ILLUS. | PART NO. | NAME OF PART | AMT. |
|---|---|---|---|
| PL-F43261 - COVER PAGE | | | |
| | | EDGE 12 - ML-136247 | AR |

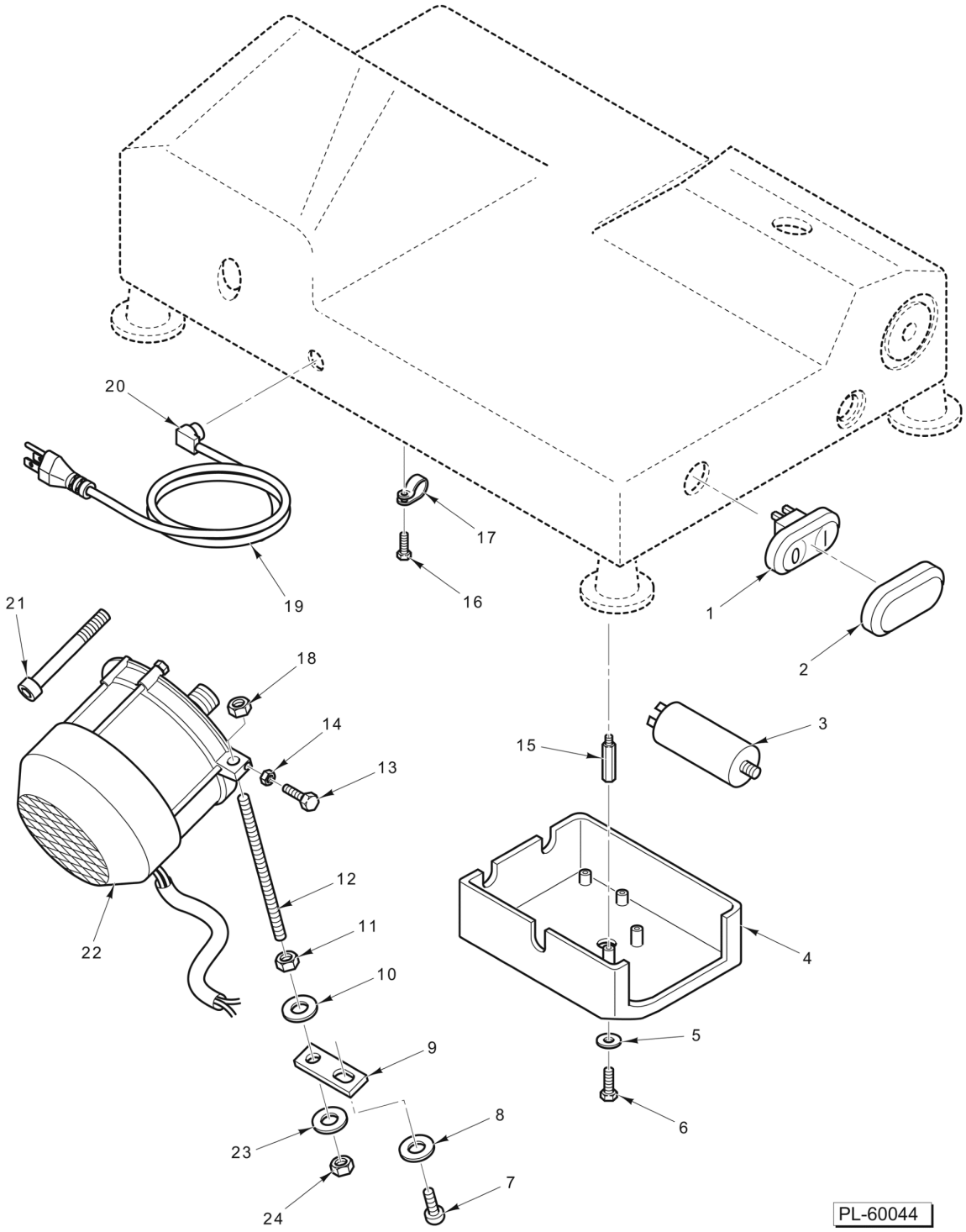


## ELECTRICAL COMPONENTS

## ELECTRICAL COMPONENTS

| ILLUS. PL-60044 | PART NO. | NAME OF PART | AMT. |
|---|---|---|---|
| 1 | 00-915503 | Switch | 1 |
| 2 | 00-915504 | Cover - Switch | 1 |
| 3 | 00-915502 | Capacitor (18mF) | 2 |
| 4 | 00-915501 | Box - Protection | 1 |
| 5 | 00-915499 | Washer | 2 |
| 6 | 01-400825-00021 | Screw | 2 |
| 7 | 01-40823E-10034 | Screw | 1 |
| 8 | 01-400825-00006 | Washer | 1 |
| 9 | 01-400825-00055 | Plate | 1 |
| 10 | 01-400825-00006 | Washer | 1 |
| 11 | 01-40300M-00098 | Nut | 1 |
| 12 | 00-915507 | Rod - Tie (Motor) | 1 |
| 13 | 00-915612-00003 | Screw (5739 5 25) | 1 |
| 14 | 01-402101-07041 | Nut | 1 |
| 15 | 00-915500 | Spacer | 1 |
| 16 | 00-915612-00004 | Screw (6594 4.7 12) | 1 |
| 17 | 00-915508 | Clamp | 1 |
| 18 | 01-40300M-00098 | Nut | 1 |
| 19 | 00-915498 | Cord - Power (120 V.) | 1 |
| 20 | 00-915497 | Plate - Locking | 1 |
| 21 | 00-915505 | Pin - Motor | 1 |
| 22 | 00-915506 | Motor (120V., 50-60 Hz., 1 Ph.) | 1 |
| | 00-915512 | Motor (220-240 V., 50-60 Hz., 1 Ph.) | 1 |
| 23 | 01-400825-00006 | Washer | 1 |
| 24 | 01-40300M-00098 | Nut | 1 |

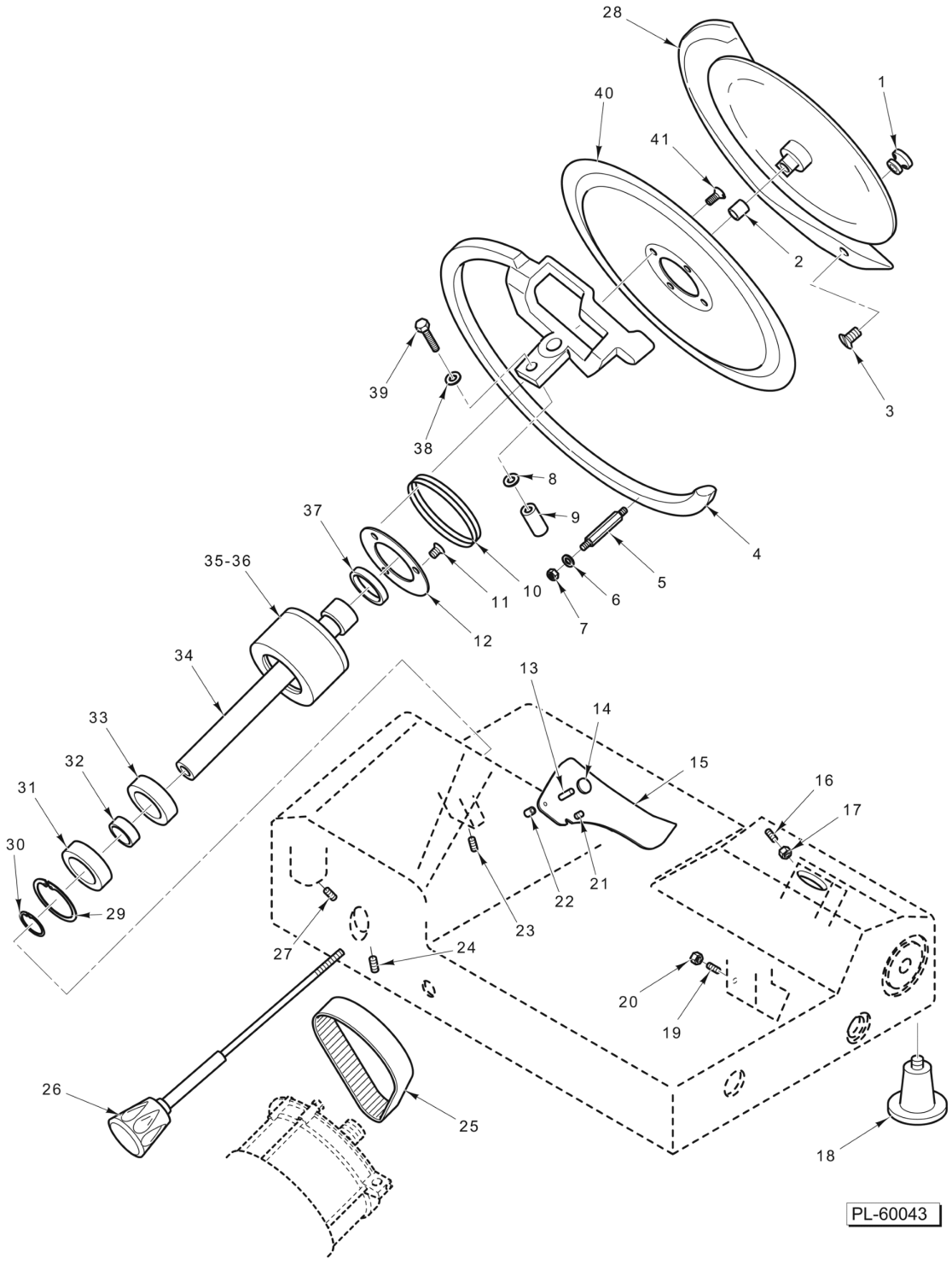


**TRANSMISSION, KNIFE, AND BASE ASSEMBLY**

## TRANSMISSION, KNIFE, AND BASE ASSEMBLY

| ILLUS. PL-60043 | PART NO. | NAME OF PART | AMT. |
|---|---|---|---|
| 1 | 01-400823-00403 | Knob - Knife Cover (Aluminum) | 1 |
| 2 | 01-400825-00135 | Insert - Cover | 1 |
| 3 | 01-400825-00021 | Screw | 1 |
| 4 | 00-915425 | Guard - Ring (Knife) | 1 |
| 5 | 00-915427 | Spacer - Ring | 2 |
| 6 | 00-915612-00001 | Washer (6592 5/A2) | 2 |
| 7 | 00-915612-00002 | Nut (5589 5/A2) | 2 |
| 8 | 01-40829A-10012 | Washer | 1 |
| 9 | 00-915426 | Support - Ring Guard | 1 |
| 10 | 00-915428 | V-Ring (Rubber) | 1 |
| 11 | 01-400825-00402 | Screw | 3 |
| 12 | 00-915429 | Flange (SST) | 1 |
| 13 | | Pin (Included in Item 14) | 1 |
| 14 | 00-915629 | Deflector Knob & Pin Assy | 1 |
| 15 | 00-915437 | Deflector | 1 |
| 16 | 01-400827-00086 | Set Screw | 1 |
| 17 | 01-402101-07041 | Nut | 1 |
| 18 | 00-915442 | Foot - Rubber | 4 |
| 19 | 01-400827-00086 | Set Screw | 1 |
| 20 | 01-402101-07041 | Nut | 1 |
| 21 | 00-915438 | Pin - Deflector | 1 |
| 22 | 01-400825-00135 | Insert - Cover | 1 |
| 23 | 01-400827-00078 | Set Screw | 1 |
| 24 | 01-400827-00078 | Set Screw | 1 |
| 25 | 00-915441 | Belt | 1 |
| 26 | 00-915440 | Tie Rod Assy. (Grey) | 1 |
| 27 | 01-400825-00086 | Screw - Grub Screw | 1 |
| 28 | 00-915423 | Cover - Knife | 1 |
| 29 | 01-400825-00071 | Retaining Ring | 1 |
| 30 | 01-400825-00072 | Retaining Ring | 1 |
| 31 | 00-915433 | Bearing | 1 |
| 32 | 00-915434 | Spacer | 1 |
| 33 | 00-915433 | Bearing | 1 |
| 34 | 00-915432 | Shaft - Pulley | 1 |
| 35 | 00-915431 | Pulley | 1 |
| 36 | 00-915443 | Pulley Assy. (Incls. Items 29 thru 35 & 37) | 1 |
| 37 | 00-915430 | Ring (Rubber) | 1 |
| 38 | 01-40829A-10012 | Washer | 1 |
| 39 | 00-915612-00007 | Screw (5739 8 65/A2) | 1 |
| 40 | 00-915424 | Knife (300mm) | 1 |
| 41 | 01-400827-00074 | Screw - Knife | 4 |

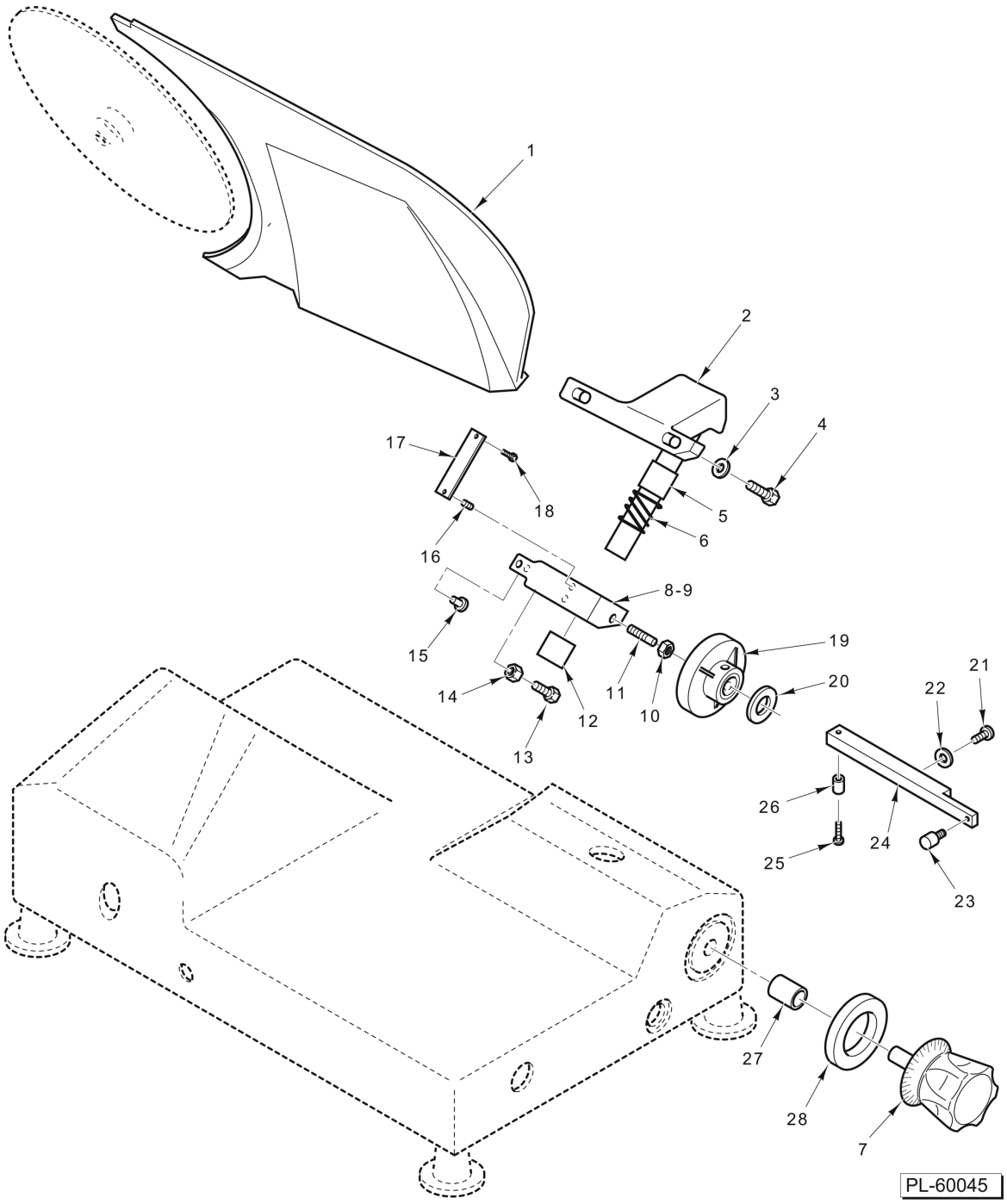


**GAUGE PLATE AND INDEX ASSEMBLY**

## GAUGE PLATE AND INDEX ASSEMBLY

| ILLUS. PL-60045 | PART NO. | NAME OF PART | AMT. |
|---|---|---|---|
| 1 | 00-915481 | Plate - Gauge | 1 |
| 2 | 00-915482 | Support - Gauge Plate | 1 |
| 3 | 01-403301-03812 | Washer | 2 |
| 4 | 01-400825-00089 | Screw | 2 |
| 5 | 00-915483 | Bushing | 1 |
| 6 | 00-915484 | Spring | 1 |
| 7 | 00-915490 | Index Knob (Grey) | 1 |
| 8 | 00-915495 | Support Assy. (Incls. Items 9 thru 15) | 1 |
| 9 | 00-915486 | Support | 1 |
| 10 | 01-40300M-00098 | Nut | 1 |
| 11 | 00-915488 | Pin - Cam | 1 |
| 12 | 00-915483 | Bushing | 1 |
| 13 | 01-400827-00028 | Screw (Brass) | 1 |
| 14 | 01-402101-07041 | Nut | 1 |
| 15 | 01-400825-00030 | Pin | 1 |
| 16 | 01-400827-00031 | Set Screw | 2 |
| 17 | 00-915487 | Plate | 1 |
| 18 | 01-400827-00032 | Screw | 2 |
| 19 | 00-915489 | Cam Assy | 1 |
| 20 | 01-400827-00095 | Washer - Spring | 1 |
| 21 | 01-40829A-10020 | Screw | 1 |
| 22 | 00-915612-00001 | Washer (6592 5 10) | 1 |
| 23 | 00-915493 | Pin | 1 |
| 24 | 00-915494 | Plate | 1 |
| 25 | 01-400827-00032 | Screw | 2 |
| 26 | 00-915492 | Bushing | 1 |
| 27 | 00-915491 | Bushing | 1 |
| 28 | 01-40829A-10023 | Washer | 1 |

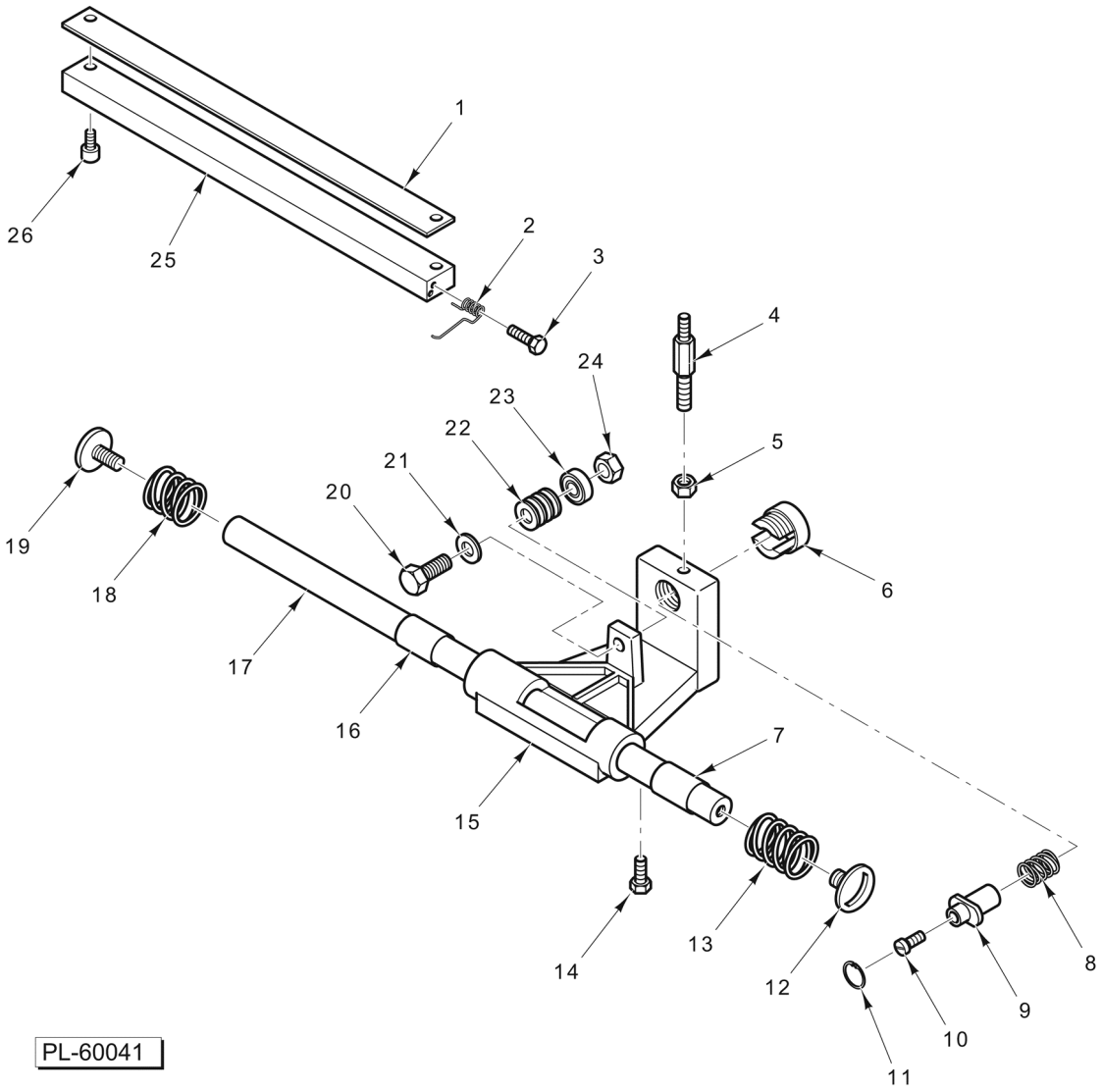


**CARRIAGE ASSEMBLY**

## CARRIAGE ASSEMBLY

| ILLUS. PL-60041 | PART NO. | NAME OF PART | AMT. |
|---|---|---|---|
| 1 | 00-915466 | Plate - Lexan | 1 |
| 2 | 00-915467 | Spring | 1 |
| 3 | 01-400827-00028 | Screw (Brass) | 1 |
| 4 | 00-915468 | Product Table Support | 1 |
| 5 | 00-915612-00002 | Nut (5589 8/A2) | 1 |
| 6 | 00-915475 | Bushing (Aluminum) | 1 |
| 7 | 00-915472 | Bushing | 1 |
| 8 | 00-915476 | Spring | 1 |
| 9 | 00-915477 | Bushing | 1 |
| 10 | 01-40829A-00606 | Screw (Nylon) | 1 |
| 11 | 01-40829A-00600 | Retaining Ring | 1 |
| 12 | 01-400827-00050 | Screw - Round Rail | 1 |
| 13 | 00-915474 | Spring | 1 |
| 14 | 01-400827-00129 | Screw (Nylon) | 1 |
| 15 | 00-915473 | Carriage | 1 |
| 16 | 00-915472 | Bushing | 1 |
| 17 | 00-915470 | Bar - Round | 1 |
| 18 | 00-915471 | Spring | 1 |
| 19 | 01-400827-00050 | Screw - Round Rail | 1 |
| 20 | 01-400827-00017 | Screw | 1 |
| 21 | 01-402101-08010 | Washer | 1 |
| 22 | 01-402101-08010 | Washer | 3 |
| 23 | 00-915469 | Bearing | 1 |
| 24 | 01-4000CU-00008 | Nut | 1 |
| 25 | 00-915465 | Bar - Square | 1 |
| 26 | 01-400827-00021 | Screw | 2 |
| | 00-915478 | Block Assy. (CE) | 1 |
| | 00-915480 | Carriage Assy. (Incls. Items 4 thru 7, 16, & 20 thru 24) | 1 |

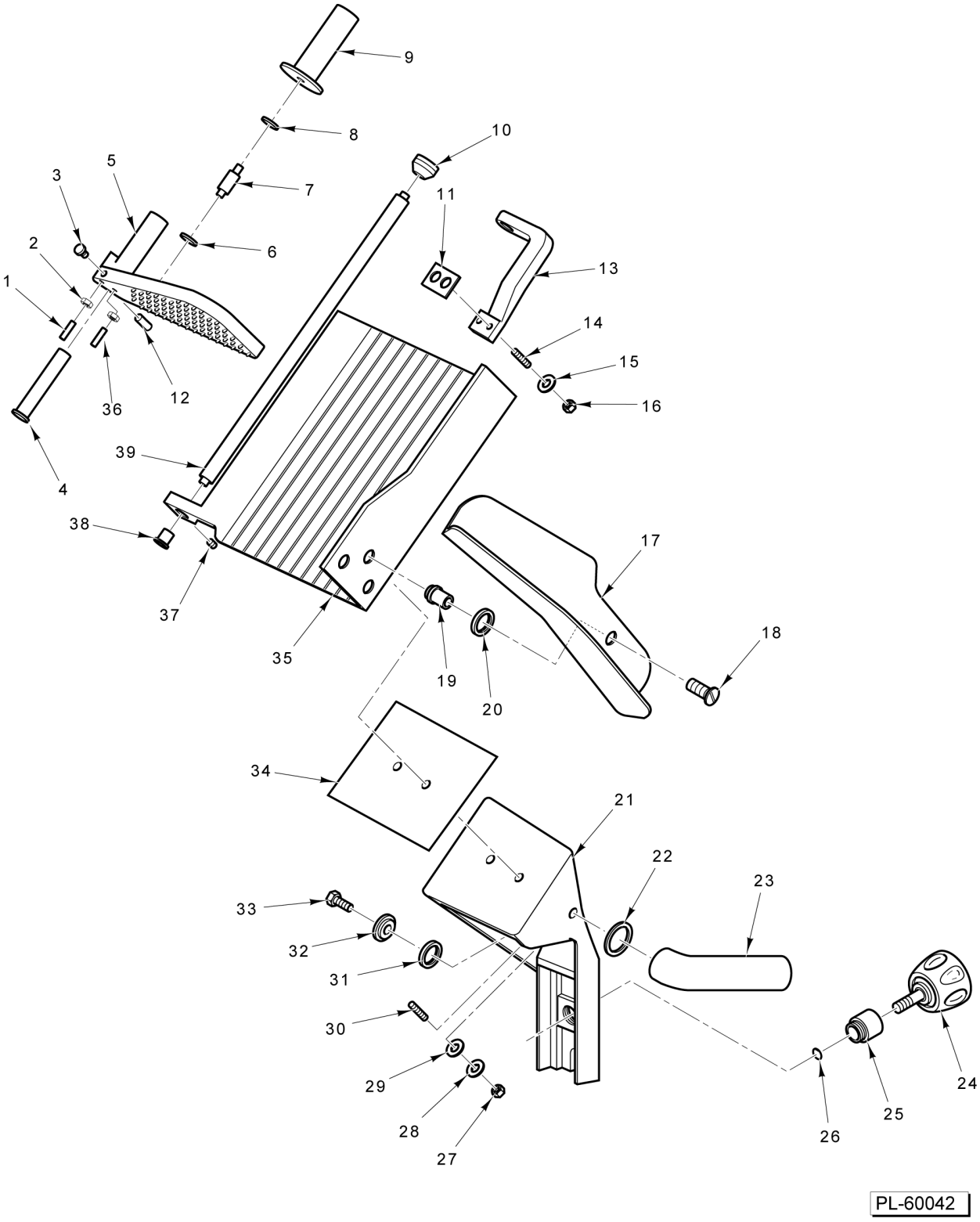


**PRODUCT TRAY AND MEAT GRIP**

## PRODUCT TRAY AND MEAT GRIP

| ILLUS. PL-60042 | PART NO. | NAME OF PART | AMT. |
|---|---|---|---|
| 1 | 00-913174 | Pin Pin | 1 |
| 2 | 01-40330M-00578 | Nut M6 (SST) | 2 |
| 3 | 01-400825-00030 | Pin | 1 |
| 4 | 00-915444 | Bushing (Plastic) | 1 |
| 5 | 00-915479 | Meat Pusher Assy. (Incls. Items 1 thru 4, 12, & 36) | 1 |
| 6 | 00-915449 | Gasket - Handle | 1 |
| 7 | 00-915450 | Spacer | 1 |
| 8 | 00-915449 | Gasket - Handle | 1 |
| 9 | 00-915451 | Handle - Pusher (Grey) | 1 |
| 10 | 00-915455 | Knob | 1 |
| 11 | 00-915456 | Gasket - Extension | 1 |
| 12 | 01-400827-00082 | Wear Pad (Plastic) | 1 |
| 13 | 00-915702 | Braclet - Extension (Grey) | 1 |
| 14 | 00-915612-00009 | Screw (5923 6 25/A2) | 2 |
| 15 | 01-40829A-10019 | Washer | 2 |
| 16 | 00-915612-00008 | Nut (5721 6/A2) | 2 |
| 17 | 00-915268 | Guard - Thumb | 1 |
| 18 | 00-915612-00010 | Screw (6109 6 20/A2) | 3 |
| 19 | 00-915460 | Insert - Standoff | 3 |
| 20 | 00-915275 | Washer (Rubber) | 3 |
| 21 | 00-915462 | Support - Tray | 1 |
| 22 | 00-915458 | Gasket - Carriage Handle | 1 |
| 23 | 00-875345 | Handle - Carriage | 1 |
| 24 | 00-915464 | Knob - Carriage | 1 |
| 25 | 00-915463 | Bushing (Aluminum) | 1 |
| 26 | 01-40829A-10028 | Retaining Ring | 1 |
| 27 | 00-915612-00002 | Nut (5589 8/A2) | 2 |
| 28 | 01-40827A-10011 | Washer (Aluminum) | 2 |
| 29 | 01-40823E-10014 | Washer - Gasket (Rubber) | 2 |
| 30 | 00-915612-00012 | Set Screw (5923 8 25/A2) | 2 |
| 31 | 01-40823E-10014 | Washer - Gasket (Rubber) | 1 |
| 32 | 01-40827A-10011 | Washer (Aluminum) | 1 |
| 33 | 01-400825-00089 | Screw | 1 |
| 34 | 00-915461 | Gasket | 1 |
| 35 | 00-915459 | Tray - Product | 1 |
| 36 | 00-915612-20 | Pin Spacer (Plastic) | 1 |
| 37 | 00-915612-00011 | Set Screw (5923 8 8/A2) | 1 |
| 38 | 00-915452 | Bushing | 1 |
| 39 | 00-915454 | Rod | 1 |

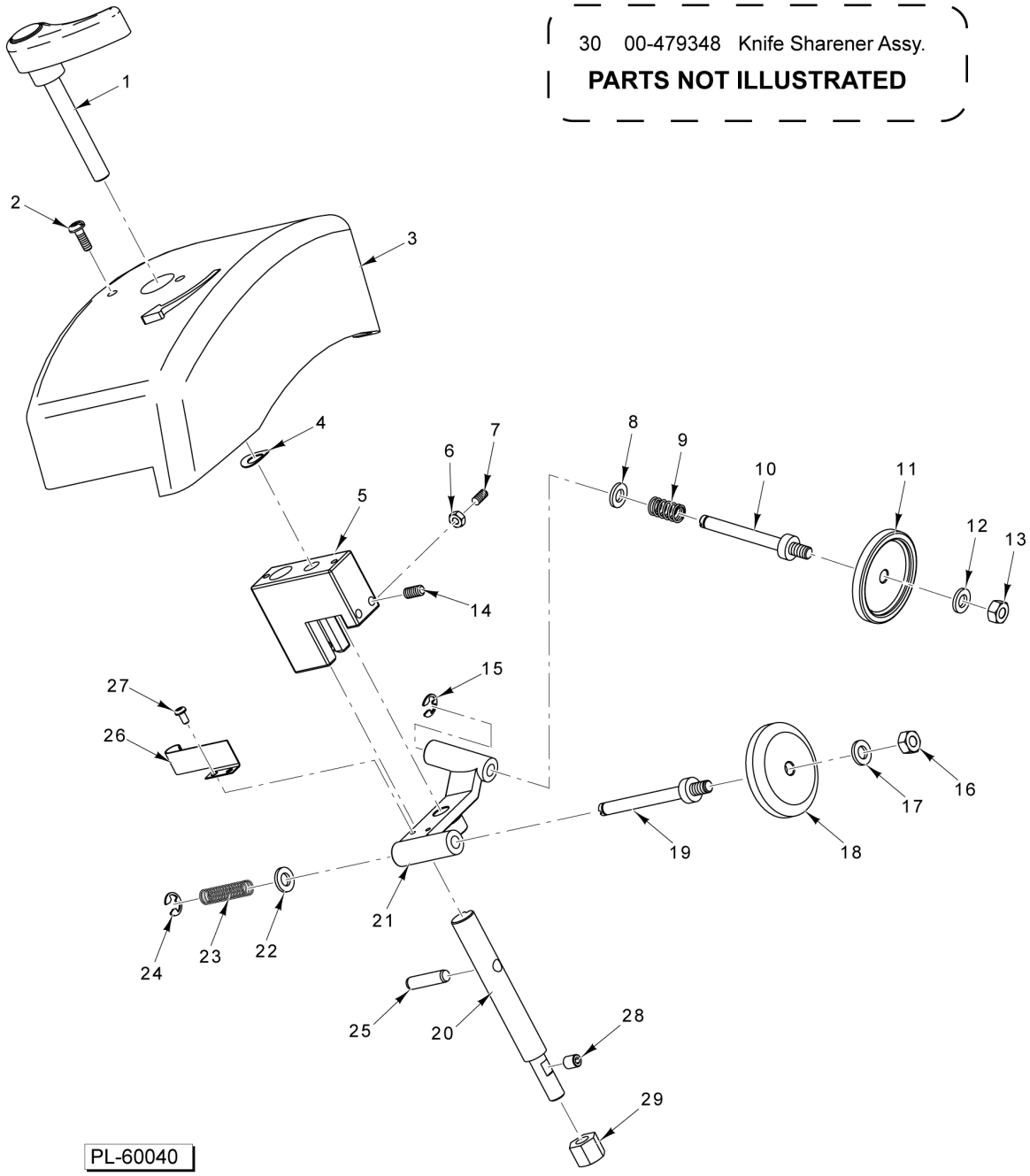


**SHARPENER ASSEMBLY**

## SHARPENER ASSEMBLY

| ILLUS. PL-60040 | PART NO. | NAME OF PART | AMT. |
|---|---|---|---|
| 1 | 00-479347 | Knob - Sharpener Assy | 1 |
| 2 | 00-915612-00013 | Screw (5739 5 12/A2) | 2 |
| 3 | 00-479342 | Cover - Sharpener | 1 |
| 4 | SL-005-09 | Spring - Loading | 1 |
| 5 | 00-479337 | Mount - Sharpener | 1 |
| 6 | 00-915612-00015 | Nut (5589 4/A2) | 1 |
| 7 | 00-915612-00019 | Set Screw (5923 4 10/A2) | 1 |
| 8 | 01-40829A-10019 | Washer | 1 |
| 9 | 00-479400 | Spring - Grinding | 1 |
| 10 | 00-479339 | Shaft - Sharpener | 1 |
| 11 | 00-479341 | Wheel - Grinding | 1 |
| 12 | 01-40829A-10019 | Washer | 1 |
| 13 | 00-915612-00020 | Nut (5589 6/A2) | 1 |
| 14 | 00-915612-00021 | Set Screw (5923 5 8/A2) | 2 |
| 15 | 00-915612-00022 | Retaining Ring - 6799 5 (6799 5) | 1 |
| 16 | 00-915612-00020 | Nut (5589 6/A2) | 1 |
| 17 | 01-40829A-10019 | Washer | 1 |
| 18 | 00-479398 | Wheel - Truing | 1 |
| 19 | 00-479340 | Shaft - Truing | 1 |
| 20 | 00-479343 | Shaft - Sharpener | 1 |
| 21 | 00-479338 | Arm - Sharpener | 1 |
| 22 | 01-40829A-10019 | Washer | 1 |
| 23 | 00-479345 | Spring - Truing | 1 |
| 24 | 00-915612-00022 | Retaining Ring - 6799 5 (6799 5) | 1 |
| 25 | 00-915496 | Pin | 1 |
| 26 | 00-479344 | Spring - Return | 1 |
| 27 | 00-915612-00018 | Screw (6107 4 6/A2) | 2 |
| 28 | 00-915612-00017 | Set Screw (5923 5 8) | 1 |
| 29 | 00-915612-00016 | Nut (5721 8/A2) | 1 |
| 30 | 00-479348 | Knife Sharpener Assy. (Incls. Items 1 thru 29 | 1 |