HOBART

INSTRUCTION MANUAL

... with Replacement Parts

MODEL F101

FAT PERCENTAGE MEASURING KIT

ML-23014

A product of HOBART CORPORATION TROY, OHIO 45374

FORM 6889 (Rev. L, 2-88)

Model F101
FAT PERCENTAGE MEASURING KIT

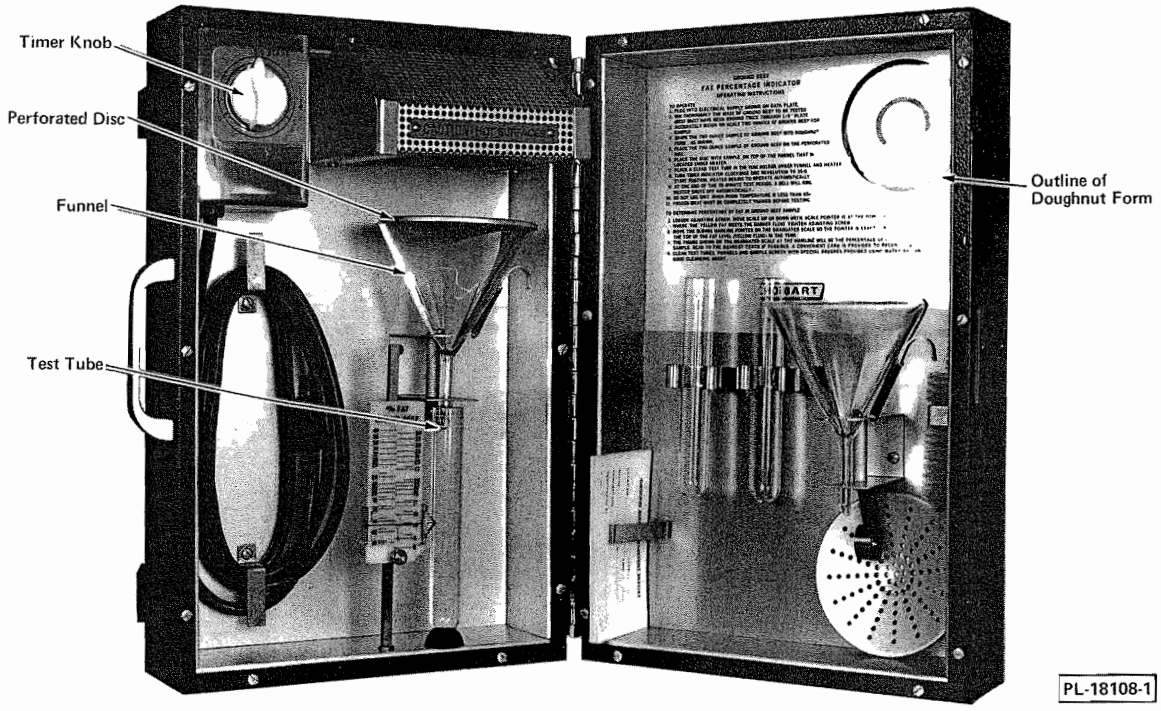

Fig. 1

GENERAL

It is recommended that specifications for fat content be based on this tester to assure comparability of test methods.

INSTALLATION

Before making any electrical connections, CHECK THE SPECIFICATIONS ON THE NAME PLATE TO MAKE SURE THEY AGREE WITH THOSE OF YOUR ELECTRICAL SERVICE (100 V. Min.) outlet.

Location

Select a location where there will be NO air movement (such as caused by a fan, open window, etc.) around the unit.

It is not necessary to fasten machine down, but if wall mounting is desired, follow these instructions.

MOUNTING FAT PERCENTAGE MEASURING KIT TO WALL

NOTE: Kit must be mounted on left panel.

It is recommended that the unit be mounted to dry wall or concrete walls, NOT to ceramic or tile walls.

Mounting to Dry Wall

Drill ¼″ hole in each of four inside corners of LEFT panel of cabinet.

Using a ½″ masonry bit, drill corresponding holes in dry wall at installation location.

Gently tap 2″ hollow wall anchor sleeve into each hole in dry wall. Anchor sleeves must be expanded prior to cabinet installation due to cabinet thickness.

Place cabinet over holes and screw down tightly with four 2¼″ screws. If cabinet is located over wall studs, use wood screws.

Mounting to Concrete Wall

Drill ¼″ hole in four inside corners of LEFT panel of cabinet.

Using a ½″ masonry bit, drill corresponding holes in concrete at installation location.

Tap 1½″ lead anchor sleeve into each hole in wall.

Place cabinet over holes and bolt down tightly with four 2″ lag bolts.

OPERATION

Thoroughly mix the mass of ground beef to be tested (this beef must have been ground at least twice through a ⅛″ plate). Three to four samplings should be used during a run. Frozen meat must be completely thawed before testing. Sample temperatures should be from 35°to 50°F. with no ice crystals. Do not expose sample to the air for a long period of time as dehydration would change test results.

Accurately weigh on scale two ounces (56.7 grams) (.13 lbs.) of ground beef for sample.

Shape the two ounce sample of ground beef into a doughnut form (Fig. 1).

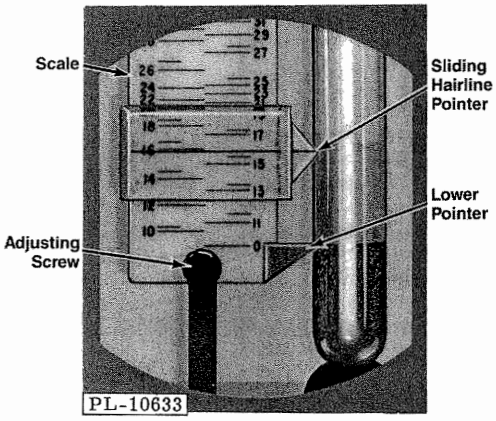

Fig. 2

Place doughnut form of ground beef on perforated disc (Fig. 1).

Place disc (with sample) on top of funnel (Fig. 1) under heater.

Place clean test tube (Fig. 1) under funnel. A retaining clip hooks over end of test tube, holding tube firmly in place. Use only Hobart test tubes, to assure accurate results.

Turn timer indicator knob (Fig. 1) clockwise (15 min.). The heater begins to operate automatically.

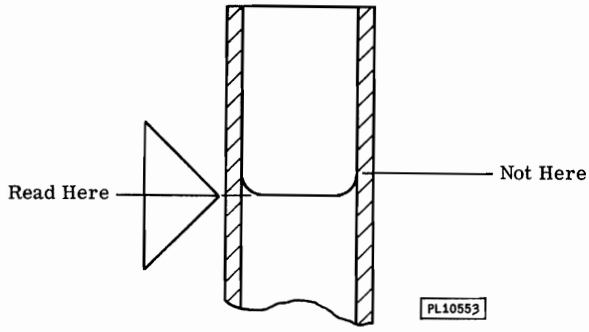

Fig. 3

Do not use unit when room temperature is less than 65°F. The preferred room temperature is from 72° to 78°F. No air movement (such as caused by a fan, open window, etc.) should be allowed in the vicinity of the tester.

At the end of the 15 minutes test period the light goes off. Heater shuts off automatically.

Loosen the adjusting screw (Fig. 2), move scale (Fig. 2) up or down until lower pointer (Fig. 2) is at the point on test tube where the yellow fat meets the dark fluid. Tighten adjusting screw.

Move the sliding hairline pointer (Fig. 2) on the graduated scale to a position where the pointer is exactly in line with the top of the fat level (yellow fluid) in the tube. The top of the fat will form a small cup called the meniscus. Be sure to set the pointer (Fig. 2) at the bottom of the meniscus (Fig. 3).

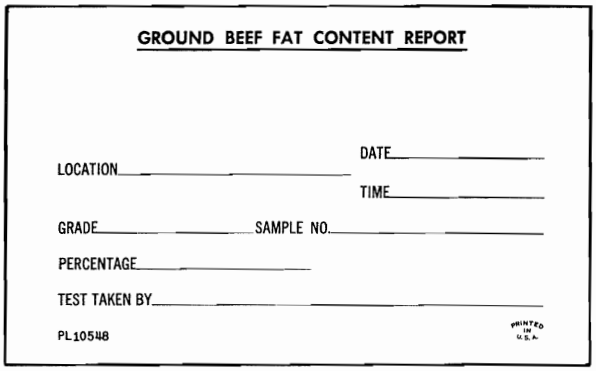
GROUND BEEF FAT CONTENT REPORT

LOCATION _____ DATE _____

TIME _____

GRADE _____ SAMPLE NO. _____

PERCENTAGE _____

TEST TAKEN BY _____

PL10548 PRINTED IN U.S.A.

Fig. 4

The figure shown on the graduated scale at the hairline is the percentage of fat in the sample. Read to the nearest tenth possible. A convenient card (Fig. 4, part number 76691) is provided to record results, and can be ordered from Hobart.

After making tests, use a good cleansing agent and warm water to thoroughly clean test tubes, funnels and disc. Special brushes are provided to aid in this operation.

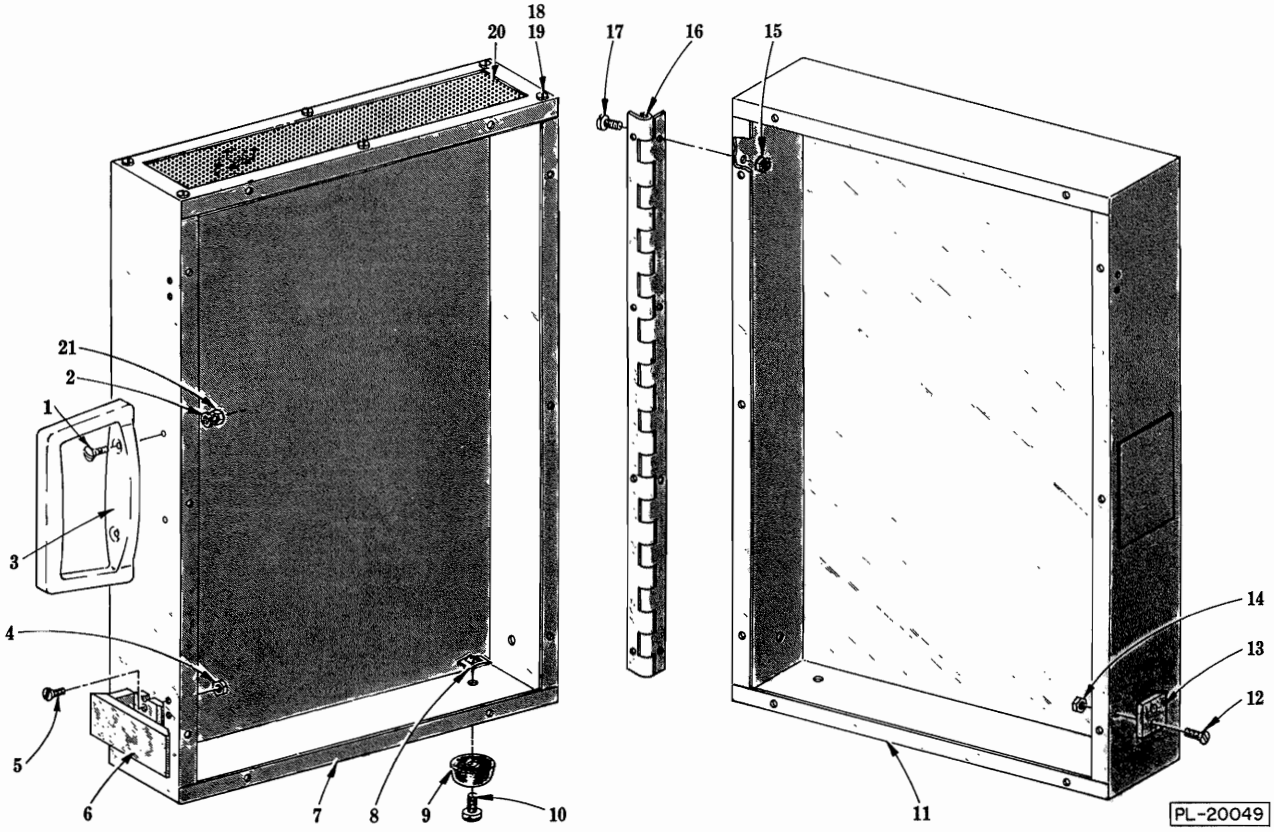

CASE UNIT

CASE UNIT

ILLUS. PL-20049	PART NO.	NAME OF PART[15]	AMT.
1	SC-15-12	Mach. Screw 6-32 × ½ Oval Ctsk	2
2	WL-6-40	Lock Washer 6 Light	2
3	291898	Handle	1
4	NS-9-2	Mach. Nut 4-40 Hex	4
5	SC-22-81	Mach. Screw 4-40 × ½ Flat Hd	4
6	76830-2	Clamp (Less Catch)	2
7	76703	Case - Left Hand	1
8	76677-2	Speed Nut 8-32	10
9	19105-1	Foot	10
10	SC-19-34	Mach. Screw 8-32 × ½ Bind. Hd	10
11	76308	Case - Right Hand	1
12	SC-22-81	Mach. Screw 4-40 × ½ Flat Hd	4
13	76830-3	Catch (Less Clamp)	2
14	NS-9-2	Mach. Nut 4-40 Hex	4
15	NS-9-3	Mach. Nut 5-40 Hex	8
16	76312-1	Hinge	1
17	SC-25-15	Mach. Screw 5-40 × ⅜ Bind. Hd	8
18	NS-9-3	Mach. Nut 5-40 Hex	6
19	SC-25-15	Mach. Screw 5-40 × ⅜ Bind. Hd	6
20	76705	Plate - Vent	1
21	NS-11-7	Mach. Nut 6-32 Hex	2
	76729	Support - Vent Plate (Not Shown)	2
	76702	Case Assy. (Incls. items 1 thru 21 and 76729)	1
	76830-1	Catch & Clamp Assy. (Incls. items 6 & 13)	1

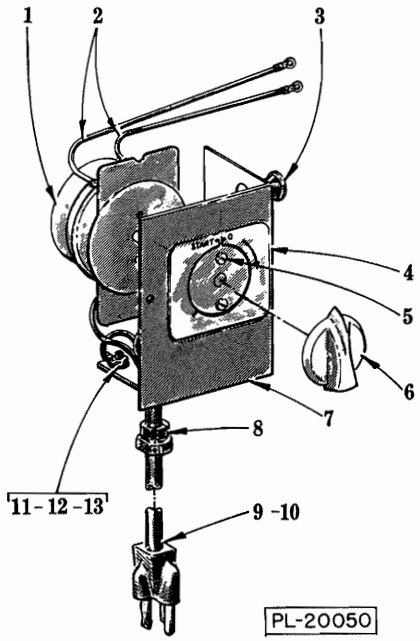

TIMER UNIT
(PRIOR TO SERIAL NUMBER 31-337-106)

ILLUS. PL-20050	PART NO.	NAME OF PART[15]	AMT.
1	*	Timer	1
2	76717	Lead (Timer to Heater)	2
3	76712	Bushing - Snap	1
4	124758	Plate - Timer	1
5	SC-25-22	Mach. Screw 5-40 × 5/16 Bind. Hd	2
6	292169-3	Pointer - Timer	1
7	*	Housing - Timer	1
8	FE-7-21	Strain Relief	1
9	117542-7	Cord & Plug Assy. (115 V., 60 Hz.)	1
10	117542-18	Cord Set (230 V., 50/60 Hz.; 115 V., 50 Hz.) (Export)	1
11	SC-109-10	Mach. Screw 6-32 × 3/8 Pan Hd	1
12	WL-6-42	Lock Washer 6 Medium	1
13	NS-11-7	Mach. Nut 6-32 Hex	1

*Order one of the following kits (Incls. timer, knob & housing)

292748	Timer Assy. Service Kit (115 V., 60 Hz.)	1
292749	Timer Assy. Service Kit (115 V., 50 Hz.)	1
292750	Timer Assy. Service Kit (220 V., 60 Hz.)	1
292751	Timer Assy. Service Kit (220/240 V., 50 Hz.)	1

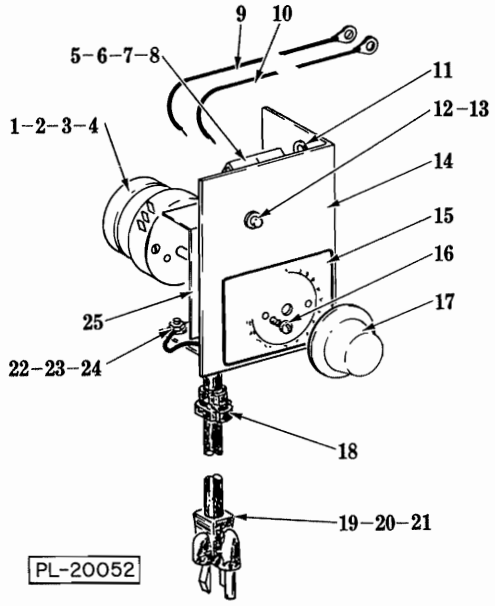

TIMER UNIT
(SERIAL NUMBER 31-337-106 AND LATER)

ILLUS. PL-20052	PART NO.	NAME OF PART[15]	AMT.
1	294650-3-1	Timer - Electrical (115 V., 60 Hz.)	1
2	294650-3-2	Timer - Electrical (230 V., 60 Hz.)	1
3	294650-3-3	Timer - Electrical (115 V., 50 Hz.)	1
4	294650-3-4	Timer - Electrical (220-240 V., 50 Hz.)	1
5	294325-5-1	Block - Terminal	1
6	SC-93-3	Mach. Screw 8-32 × ⅜ Pan Hd	2
7	WL-14-5	Lock Washer 8 Ext. Shakeproof	2
8	NS-11-12	Mach. Nut 8-32 Hex	2
9	123648-34	Lead (Terminal Block to Heater, TB-1)	1
10	123648-35	Lead (Terminal Block to Heater, TB-2)	1
11	76712	Bushing - Snap	1
12	294700-4-1	Light - Pilot (115 V.)	1
13	294700-4-4	Light - Pilot (230 V.)	1
14	292736	Housing - Timer	1
15	292732	Logo - Switch	1
16	SC-25-16	Mach. Screw 5-40 × ¼ Bind. Hd	2
17	291748	Knob - Timer	1
18	FE-7-21	Strain Relief	1
19	117542-47	Cord & Plug (115 V., 60 Hz.)	1
20	117542-48	Cord & Plug (230 V., 60 Hz.)	1
21	117542-49	Cord & Plug (115, 220-240 V., 50 Hz.)	1
22	SC-93-3	Mach. Screw 8-32 × ⅜ Pan Hd	1
23	WL-14-5	Lock Washer 8 Ext. Shakeproof	1
24	NS-11-12	Mach. Nut 8-32 Hex	1
25	291750	Insulator - Switch	1

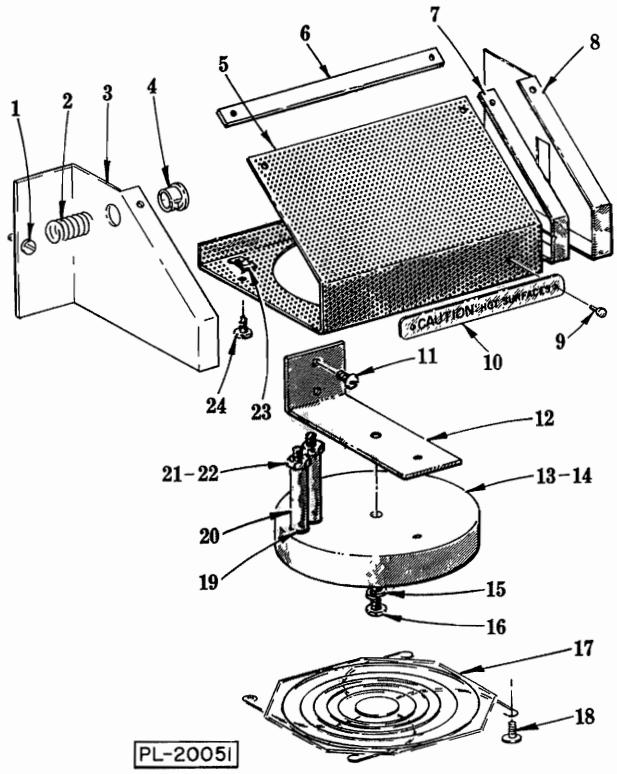

HEATER UNIT

HEATER UNIT

ILLUS. PL-20051	PART NO.	NAME OF PART15	AMT.
1	SD-19-33	Self-Tapping Screw 8 × 5/16 Pan Hd., Type B	1
2	76732	Spring - Shield	1
3	76710	End Cap - Heater Housing (Left)	1
4	76712	Bushing - Snap	1
5	76711	Screen - Heater Housing	1
6	76731	Bar - Support	1
7	76730	Support - Heater Housing	2
8	76709	End Cap - Heater Housing (Right)	1
9	RS-29-9	Rivet	2
10	290142-24	Plate - Caution	1
11	SC-18-52	Mach. Screw 10-24 × 5/16 Pan Hd	2
12	76707	Support - Heater	1
13	76718-1	Heater Assy. (115 V.) (Incls. items 15, 16, 17 & 18)	1
14	76718-2	Heater Assy. (230 V.) (Incls. items 15, 16, 17 & 18)	1
15	WL-6-7	Lock Washer 10 Medium	1
16	SC-27-48	Mach. Screw 10-24 × 1 Rd. Hd	1
17	291930	Grill	1
18	SD-19-33	Self-Tapping Screw 8 × 5/16 Pan Hd., Type B	4
19	WL-8-1	Lock Washer 6 Int. Shakeproof	2
20	76719	Post - Heater Terminal	2
21	WL-8-1	Lock Washer 6 Int. Shakeproof	2
22	NS-11-7	Mach. Nut 6-32 Hex	2
23	76677-2	Speed Nut 8-32	4
24	SD-17-40	Self-Tapping Screw 8 × 1/2 Pan Hd., Type AB	4
	76708-1	Heater Housing Assy. (Incls. items 3 thru 10, 23 & 24)	1

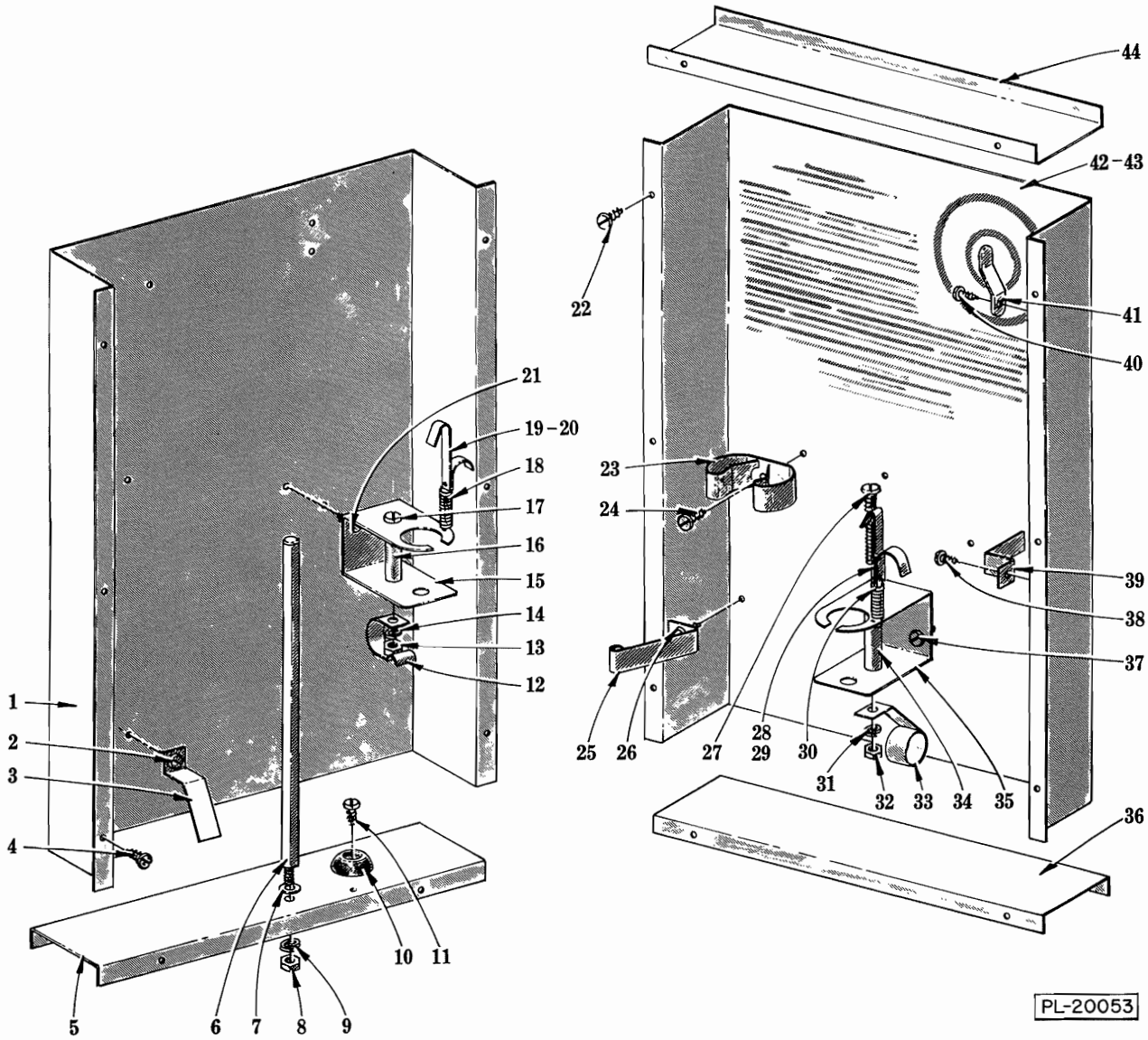
1
2
3
4
5
6
7
8
9
10
11
12
13
14
15
16
17
18
19-20
21
22
23
24
25
26
27
28
29
30
31
32
33
34
35
36
37
38
39
40
41
42-43
44
PL-20053

LINER UNIT

LINER UNIT

ILLUS. PL-20053	PART NO.	NAME OF PART[15]	AMT.
1	76887	Left Hand Liner Assy	1
2	SD-19-33	Self-Tapping Screw 8 × 5/16 Pan Hd., Type B	2
3	76333	Bracket - Cord	2
4	SD-19-33	Self-Tapping Screw 8 × 5/16 Pan Hd., Type B	8
5	76315	Liner - Left Hand Bottom	1
6	76316	Post - Scale	1
7	WS-19-20	Washer	1
8	NS-11-23	Mach. Nut 10-32 Hex	1
9	WL-6-7	Lock Washer 10 Medium	1
10	19105-1	Bumper	1
11	SD-17-40	Self-Tapping Screw 8 × 1/2 Pan Hd., Type AB	1
12	76322	Clip - Test Tube	1
13	NS-11-23	Mach. Nut 10-32 Hex	1
14	WL-6-7	Lock Washer 10 Medium	1
15	76321	Holder - Funnel	1
16	76318	Spacer	1
17	SC-25-25	Mach. Screw 10-32 × 2 Bind. Hd	1
18	76326	Spring	1
19	76325	Clip - Funnel	1
20	76324	Funnel Clip Assy. (Incls. items 18 & 19)	1
21	SD-19-33	Self-Tapping Screw 8 × 5/16 Pan Hd., Type B	2
22	SD-19-33	Self-Tapping Screw 8 × 5/16 Pan Hd., Type B	10
23	76331	Clip - Test Tube	2
24	SD-19-33	Self-Tapping Screw 8 × 5/16 Pan Hd., Type B	2
25	76327	Clip - Data Card	1
26	SD-19-33	Self-Tapping Screw 8 × 5/16 Pan Hd., Type B	1
27	SC-25-25	Mach. Screw 10-32 × 2 Bind. Hd	1
28	76324	Funnel Clip Assy. (Incls. items 29 & 30)	1
29	76325	Clip - Funnel	1
30	76326	Spring	1
31	WL-6-7	Lock Washer 10 Medium	1
32	NS-11-23	Mach. Nut 10-32 Hex	1
33	76323	Clip - Sample Screen	1
34	76318	Spacer	1
35	76321	Holder - Funnel	1
36	76329	Liner - Right Hand End	1
37	SD-19-33	Self-Tapping Screw 8 × 5/16 Pan Hd., Type B	2
38	SD-19-33	Self-Tapping Screw 8 × 5/16 Pan Hd., Type B	1
39	76333	Clip - Brush	1
40	SD-19-33	Self-Tapping Screw 8 × 5/16 Pan Hd., Type B	1
41	76332	Hanger - Brush	1
42	290289	Right Hand Liner Assy. (Incls. item 43)	1
43	292786	Overlay - Mylar (Operating Instructions)	1
44	76329	Liner - Right Hand End	1
	76314	Left Hand Bottom Liner Assy. (Incls. items 5 thru 11)	1
	76319	Left Hand Funnel Holder Assy. (Incls. items 12 thru 17 & 20)	1
	76320	Right Hand Funnel Holder Assy. (Incls. items 27, 28, 31, 32, 33, 34 & 35)	1

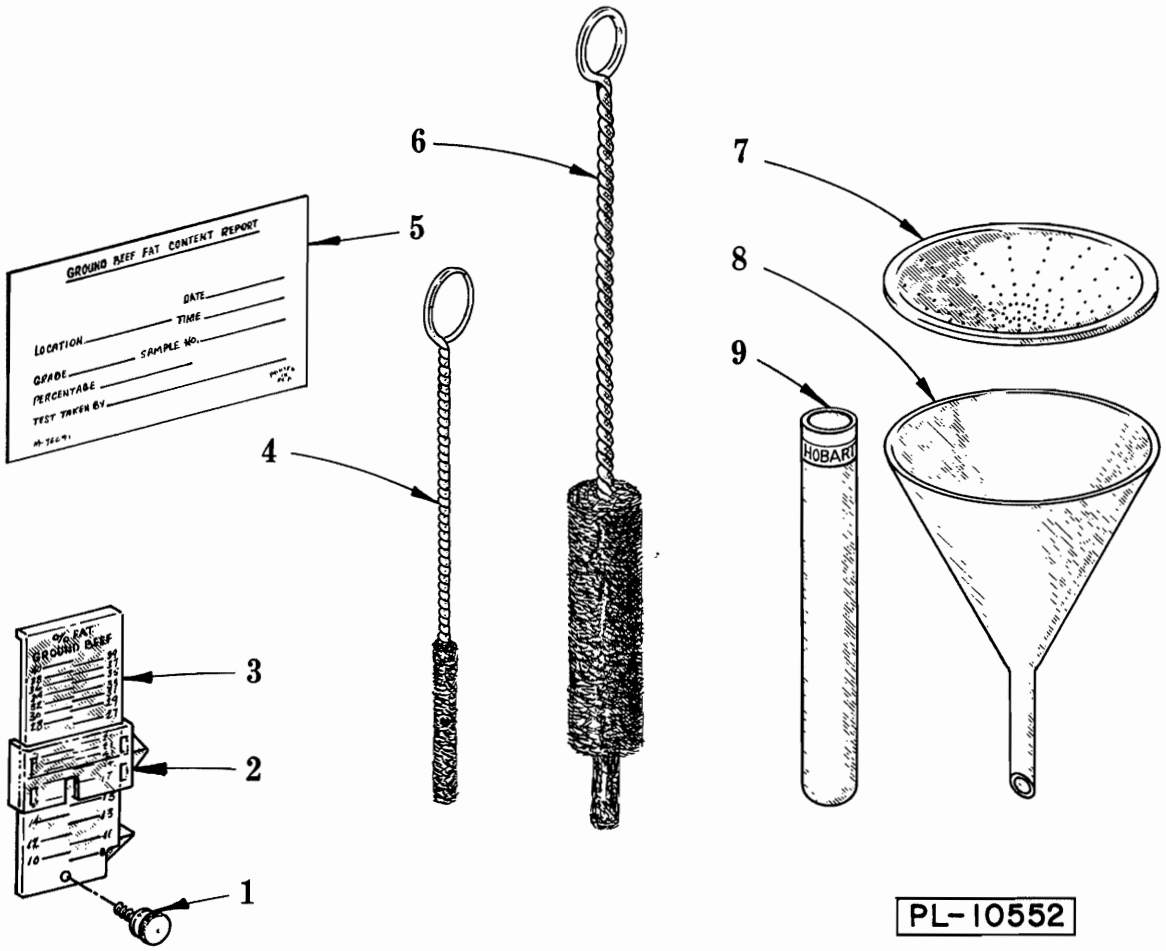

MISCELLANEOUS

ILLUS. PL-10552	PART NO.	NAME OF PART[15]	AMT.
1	76340	Thumber Screw	1
2	76699	Slider (Includes Springs)	1
3	76698	Percentage Scale Assy. (Incls. items 1 & 2)	1
4	76368	Brush - Small	1
5	76691	Card - Content Report	AR
6	76367	Brush - Large	1
7	76366	Screen - Sample	2
8	76364	Funnel	2
9	76770	Test Tube (Use only Hobart test tubes)	3