HOBART

SERVICE

CATALOG OF REPLACEMENT PARTS

FP250 Food Processors

FP250

ML-134228



33031

A Product of Hobart Service 701 S. Ridge Ave Troy, OH 45374

FORM F43077 Rev. B (July 2026)

 © HOBART SERVICE 2026

Table of Contents

4 F43077 TIS COVER
6 HOUSING
8 MOTOR AND BASE
10 ACCESSORIES
12 MANUAL PUSH FEED AND PLUNGER

CATALOG OF REPLACEMENT PARTS



33031

Food Processors FP250 (ML-134228)

A product of HOBART 701 S. RIDGE AVENUE TROY, OHIO 45374-0001

FORM 43077

F43077 TIS COVER

F43077 TIS COVER

ILLUS.	PART NO.	NAME OF PART	AMT.
PL-F43077 Cover Page			
	ML-134288		AR

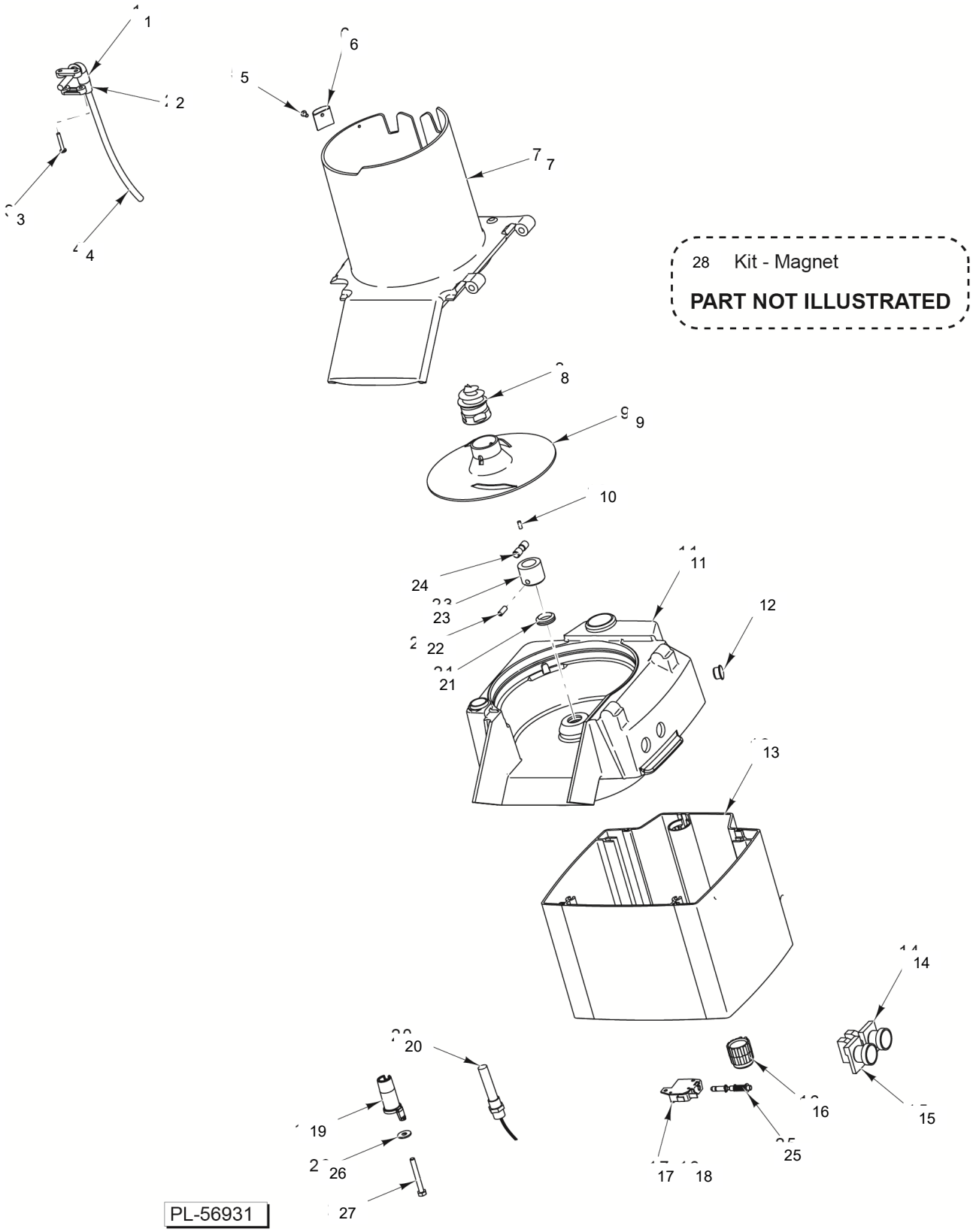
1
2
3
4
5
6
7
8
9
10
11
12
13
14
15
16
17
18
19
20
21
22
23
24
25
26
27
28 Kit - Magnet
PART NOT ILLUSTRATED
PL-56931

HOUSING

HOUSING

ILLUS. PL-56931	PART NO.	NAME OF PART	AMT.
1	00-875641	Sleeve	1
2	00-875642	Clamp - Strain Relief	2
3	SC-122-38	Mach. Screw M4 x 0.7 x 25 mm Phil. Pan Hd. (SST)	2
4	00-274857	Cable W/Plug	1
5	SC-123-02	Mach. Screw M4 x 0.7 x 10 mm Slotted Oval Hd	1
6	00-875634	Support - Piston	1
7	00-914770	Feed Hopper Assy.	1
8	00-436420	Screw - Decoring	1
9	00-875636	Ejector	1
10	SC-121-48	Set Screw M8 x 1.25 x 12 mm Slotted Hdls., Cup Point (SST)	1
11	00-938550	Chamber - Knife	1
12	00-479574	Plug	1
13	00-875643	Housing Assy. - Machine	1
14	00-875522	Button - Stop Assy	1
15	00-875523	Button - Start Assy.	1
16	00-875638	Bushing - Guide	1
17	00-875639	Switch - Safety	1
18	SD-039-26	Self-Tapping Screw M4 x 10mm Tx. Pan Hd., Type BT (SST)	2
19	00-875624	Collar	1
20	00-477264	Switch - Reed	1
21	00-274321	Washer - Seal	1
22	00-274323	Pin	1
23	00-436418	Sleeve - Thrust	1
24	00-436419	Pin - Carrier	1
25	00-875640	Pin - Activator	1
26	WS-030-43	Washer (SST)	1
27	SC-200-06	Mach. Screw M6 x 1.0 x 40 mm Slotted Pan Hd.	1
28	01-650028	Kit - Magnet	1

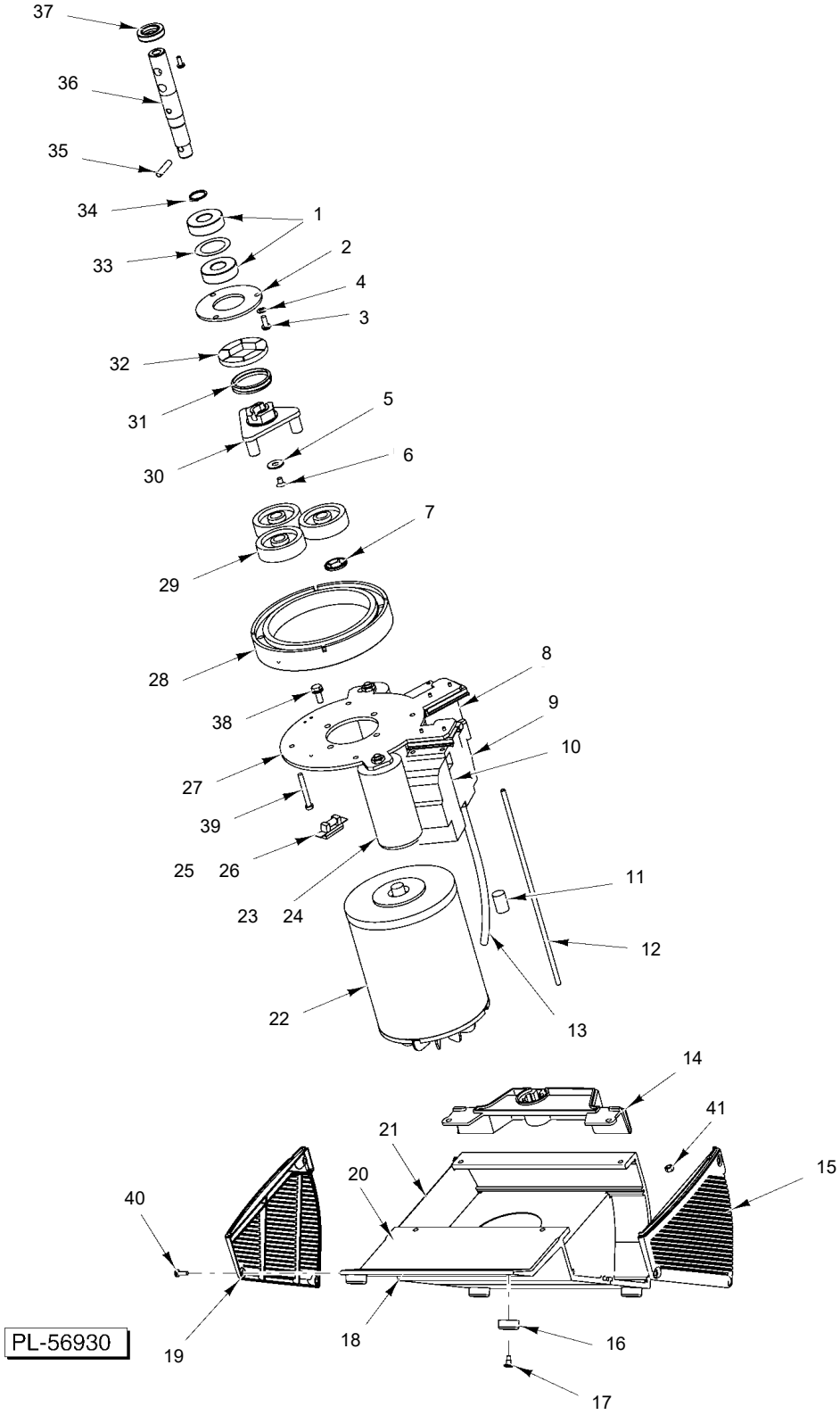

MOTOR AND BASE

MOTOR AND BASE

ILLUS. PL-56930	PART NO.	NAME OF PART	AMT.
1	BB-017-09	Bearing - Ball	2
2	00-274403	Shim - Brake	1
3	SC-120-92	Mach. Screw M5 x 0.8 x 12 mm Slotted Cheese Hd. (SST)	3
4	WL-019-75	Lockwasher M5 Helical	3
5	00-274376	Washer - Spring	1
6	SC-120-93	Mach. Screw M5 x 0.8 x 10 mm Hex Flat Hd. (SST)	1
7	00-274398	Washer - Planetary	3
8	00-087713-089-1	Contactor (110 V.)	1
9	00-875526	Contactor (110 V.)	1
10	00-875654	Relay - Overload	1
11	00-274344	Circuit - RC	1
12	00-875656	Kit - Draw Bar	1
13	00-875657	Kit - Wiring	1
14	00-875644	Handle	1
15	00-875645	Louver - Right	1
16	00-478891	Foot - Rubber	4
17	00-478943	Screw - Special	4
18	00-875627	Base	1
19	00-875628	Louver - Left	1
20	00-875666	Plate - Fan (Outlet)	1
21	00-875665	Plate - Fan (Inlet)	1
22	00-875626	Motor	1
23	00-939199	Capacitor 30 mf	1
24	00-915745	Capacitor - 120V 60 mf	1
25	00-477269	Holder - Fuse	1
26	00-477268	Fuse	1
27	00-875625	Plate - Motor	1
28	00-274397	Ring - Planetary	1
29	00-274402	Wheel - Planetary	3
30	00-274393	Carrier - Planet	1
31	00-274394	Spring - Pressure	1
32	00-274336	Disk - Brake	1
33	00-274399	Spacer - Bearing	1
34	00-274400	Clip - Bearing	1
35	RP-006-24	Pin - Roll	1
36	00-436416	Shaft - Knife	1
37	00-274333	Washer - Rubber Seal	1
38	SC-118-58	Cap Screw M6 x 1.0 x 12 mm Hex Hd. (SST)	4
39	SC-120-91	Mach. Screw M5 x 0.8 x 40 mm Slotted Cheese Hd. (SST)	4
40	SD-038-39	Self-Tapping Screw 3.5mm x 13mm Slotted Oval Hd., Type AB (SST)	6
41	NS-048-90	Nut - Stop M5 x 0.8 (SST)	4

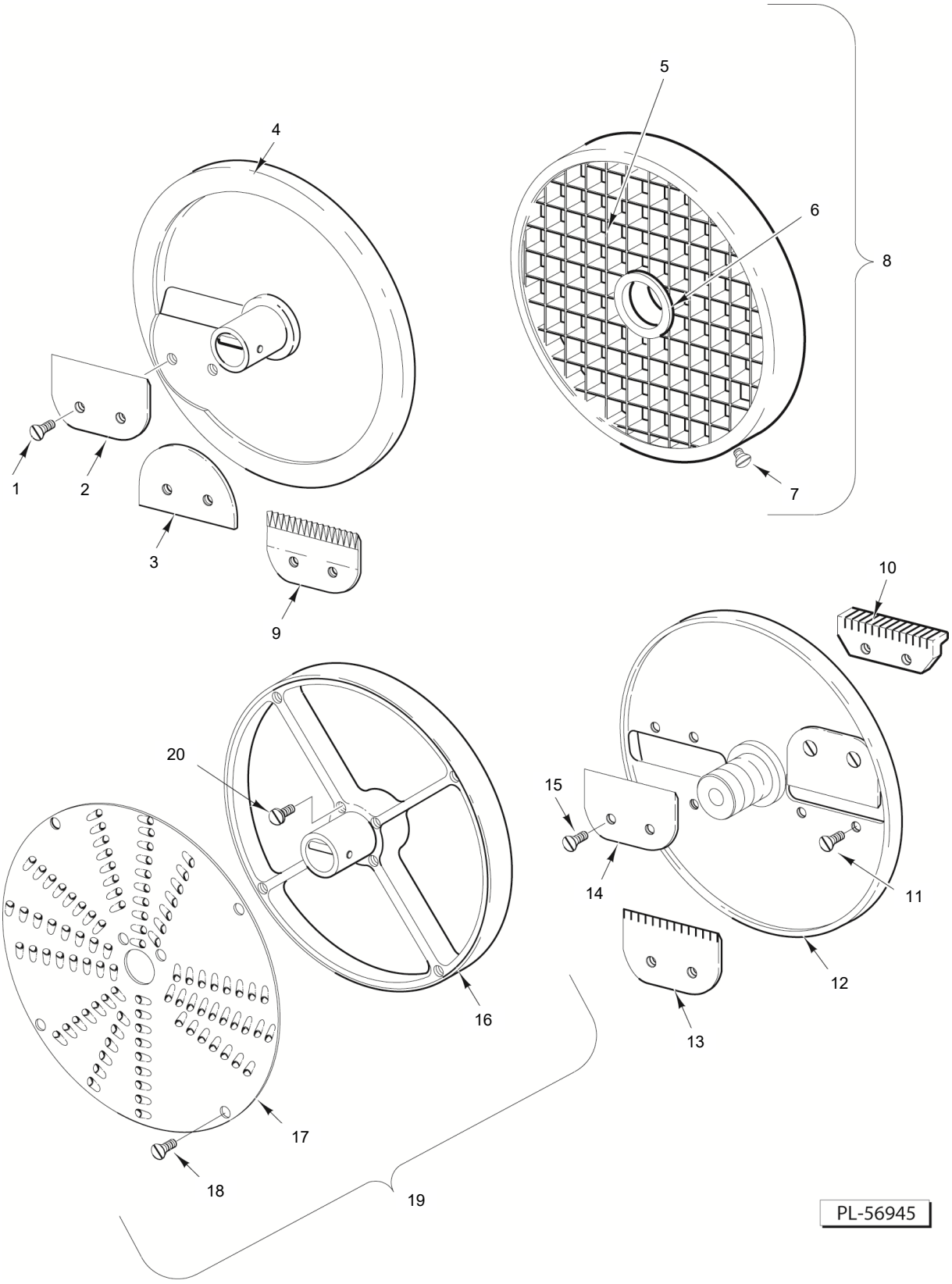

ACCESSORIES

ACCESSORIES

ILLUS. PL-5813	PART NO.	NAME OF PART	AMT.
1	SC-120-82	Mach. Screw M5 x 0.8 x 6 mm Slotted Flat Hd. (SST)	AR
2	00-274317	Knife - Standard Slicer	AR
3	00-274318	Knife - Fine Slicer	AR
4	00-477570	Plate Assy. 1/8 Fine Slicer (Incls. Items 1 & 3)	1
	00-436411-00001	Plate Assy. 1/16 Fine Slicer (Incls. Items 1 & 3)	1
	00-436412-00004	Plate Assy. 9/16 Fine Slicer (Incls. Items 1 & 3)	1
	00-436412-00001	Plate Assy. 5/32 Fine Slicer (Incls. Items 1 & 3)	1
	00-436412-00002	Plate Assy. 7/32 Fine Slicer (Incls. Items 1 & 3)	1
	00-436412-00003	Plate Assy. 3/8 Fine Slicer (Incls. Items 1 & 3)	1
	00-939196	Plate, Slicer, 3/8" Scalloped Blade Lock	1
	00-436460	Plate Assy. 3/16 Crimping Slicer (Incls. Items 1 & 22)	1
5	00-477782	Kit - Dicing Grid Knife 9/32	1
	00-477783	Kit - Dicing Grid Knife (3/8 In.)	1
	00-477784	Kit - Dicing Grid Knife (5/8 In.)	1
	00-477785	Kit - Dicing Grid Knife (3/4 In.)	1
	00-435116	Kit - French Fry Knife	1
6	00-477716	Ring - Center Grid	1
7	SC-120-83	Mach. Screw M4 x 0.7 x 6 mm Slotted Flat Hd. (SST)	4
8	00-477712	Plate Assy. - Dicer (9/32 In.)	1
	00-477713	Plate Assy. - Dicer 3/8 (Incls. Items 12, 16, & 17)	1
	00-477714	Plate Assy. - Dicer 5/8 (Incls. Items 13, 16, & 17)	1
	00-477715	Plate Assy. - Dicer (3/4 In.)	1
9	00-435128	Knife - Crimping Slicer	AR
10	00-437550	Knife - Balk (3/16 In.)	1
	00-437549	Knife - Balk 3/32 (Use With Item 33)	1
	00-437552	Knife - Balk (5/16 In.)	1
11	SC-118-26	Mach. Screw M4 x 0.7 x 10 mm Slotted Flat Hd. (SST)	AR
	SC-120-83	Mach. Screw M4 x 0.7 x 6 mm Slotted Flat Hd. (SST)	AR
12	00-437252	Plate Assy. - Julienne (3/32 In.)	1
	00-436423-00001	Plate Assy. - Julienne 3/16 (Incls. Items 23, 27, 31, & 34)	1
	00-437254	Plate Assy. - Julienne 5/16 (Incls. Items 25, 27, 32, & 34)	1
13	00-294968	Knife - Julienne (3/16 In.)	AR
	00-294968-00003	Knife - Julienne 5/16 (Use With Item 25)	AR
14	00-274317	Knife - Standard Slicer (Use With Item 24 for 3/32 Julienne)	AR
15	SC-120-82	Mach. Screw M5 x 0.8 x 6 mm Slotted Flat Hd. (SST)	AR
16	00-436415	Frame (For 1/16, 3/32, 1/8, 3/16, 7/32 Shredder Inserts & Fine Grater)	1
	00-436414	Frame (For 5/16 Shredder Inserts)	1
17	00-435734	Insert - 1/16 Shredder Plate	1
	00-274320	Insert - 3/32 Shredder Plate	1
	00-274409	Insert - 1/8 Shredder Plate	1
	00-274343	Insert - 3/16 Shredder Plate	1
	00-274410	Insert - 5/16 Shredder Plate	1
	00-435735	Insert - 7/32 Shredder Plate	1
	00-436462	Insert - Fine Grater	1
18	SD-037-39	Self-Tapping Screw 2.9 mm x 13 mm Slotted Flat Hd., Type AB (SST)	AR
	SD-038-39	Self-Tapping Screw 3.5mm x 13mm Slotted Oval Hd., Type AB (SST)	4
19	00-436484	Plate Assy. - Fine Grater (Incls. Items 35, 43, & 44)	1
	00-436407-00001	Plate Assy. - Shredder 1/16 (Incls. Items 35, 37, & 44)	1
	00-436407-00002	Plate Assy. - Shredder 3/32 (Incls. Items 35, 38, & 44)	1
	00-436407-00003	Plate Assy. - Shredder 1/8 (Incls. Items 35, 39, & 44)	1
	00-436407-00004	Plate Assy. - Shredder 3/16 (Incls. Items 36, 40, 44, & 45)	1
	00-436407-00005	Plate Assy. - Shredder 7/32 (Incls. Items 36, 42, 44, & 45)	1
	00-436407-00006	Plate Assy. - Shredder 5/16 (Incls. Items 36, 41, 44, & 45)	1
20	SD-038-39	Self-Tapping Screw 3.5mm x 13mm Slotted Oval Hd., Type AB (SST)	4
	00-274372	Rack - Wall (Incls. Label)	1
	00-274329	Brush (Cleaning)	1
	00-436421	Wrench - Decoring Screw	1

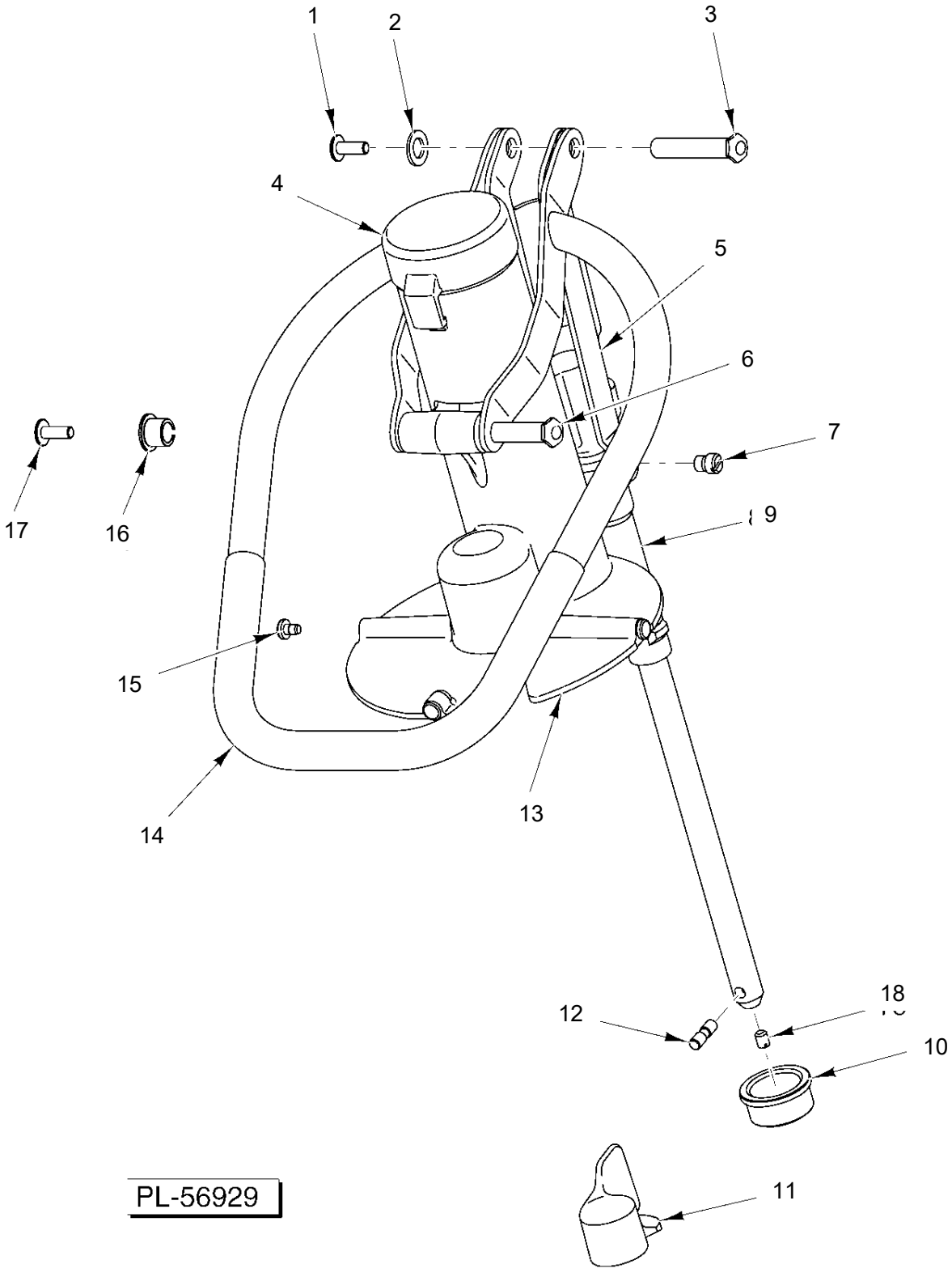

MANUAL PUSH FEED AND PLUNGER

MANUAL PUSH FEED AND PLUNGER

ILLUS. PL-56929	PART NO.	NAME OF PART	AMT.
1	00-875614	Screw - Link	2
2	00-875615	Washer (Plastic)	2
3	00-875616	Shaft (L 45)	1
4	00-875629	Plunger (Hobart)	1
5	00-875630	Link	1
6	00-875618	Shaft (L56)	2
7	00-875631	Screw - Link	2
8	00-875632	Sleeve - Link	1
9	00-875633	Bushing	2
10	00-875622	Bushing	1
11	00-875623	Handle - Locking	1
12	00-875621	Pin	1
13	00-875620	Plate - Feeder	1
14	00-875619	Handle - Pusher	1
15	00-478905	Knob - Slide	3
16	00-875617	Bushing	1
17	00-875614	Screw - Link	2
18	SC-128-58	Set Screw M6 x 1.0 x 8 mm Hex Hdls., Cup Pt. (SST)	1