HOBART

CATALOG OF REPLACEMENT PARTS

FRC Series Dishwashers

FRC44A (R-L)	ML-103147
FRC44A (L-R)	ML-103148
FRC66A (R-L)	ML-103157
FRC66A (L-R)	ML-103158
FRC80A (R-L)	ML-103165
FRC80A (L-R)	ML-103166
FRC88A (R-L)	ML-110087
FRC88A (L-R)	ML-110088
FRC110A (L-R)	ML-110089
FRC110A (R-L)	ML-110090
FRC124A (L-R)	ML-110091
FRC124A (R-L)	ML-110092
FRC54A (L-R)	ML-104289
FRC54A (R-L)	ML-104290
FRC76A (L-R)	ML-104291
FRC76A (R-L)	ML-104292
FRC90A (L-R)	ML-104293
FRC90A (R-L)	ML-104294
FRC64A (R-L)	ML-104132
FRC64A (L-R)	ML-104133
FRC86A (R-L)	ML-104142
FRC86A (L-R)	ML-104145
FRC100A (R-L)	ML-104150
FRC100A (L-R)	ML-104153

A product of HOBART 701 S. RIDGE AVENUE TROY, OHIO 45374-0001

FORM 43020 (May 2023)

 © HOBART 2023

Table of Contents

7 PUSH - BUTTON CONTROL BOX
9 DISH RACKS
11 CHAIN, CHAIN GUIDES, AND RACK GUIDES
13 FLOW BACK TUBE
15 DOOR AND CURTAIN
17 PREWASH MOTOR AND PUMP
19 PREWASH CHAMBER AND TANK
21 PREWASH ARMS AND TUBES
25 DRAIN
27 WATER LEVEL FLOATS
29 PREWASH TEMPERATURE CONTROL - PIPING
31 PREWASH TEMPERATURE CONTROL - ELECTRICAL
33 BUCKET AND STRAINER PANS
35 MISCELLANEOUS
37 PUMP MOTOR PARTS (RS-22 ON CURVE)
39 MOTOR AND PUMP (H-6-F) (RS-22 ON CURVE)
41 INSIDE DOOR UNIT (PREWASH) (RS-22 ON CURVE)
43 OUTSIDE DOOR UNIT (PREWASH) (RS-22 ON CURVE)
45 STRAINER PANS (RS-22 ON CURVE)
47 WASH PIPING (RS-22 ON CURVE)
49 FLOW BACK TUBE
51 DOOR AND CURTAIN
53 PREWASH MOTOR AND PUMP
55 PREWASH CHAMBER AND TANK
57 PREWASH ARMS AND TUBES
61 DRAIN
63 WATER LEVEL FLOATS
65 PREWASH TEMPERATURE CONTROL - PIPING
67 PREWASH TEMPERATURE CONTROL - ELECTRICAL
69 BUCKET AND STRAINER PANS
71 MISCELLANEOUS
73 CONTROL BOX
75 COMPONENT PANEL (CONTROL BOX)
79 WASH MOTOR AND PUMP UNIT
81 WASH ARMS AND TUBES (WASH SECTION)
83 FILL AND OUTSIDE RINSE PIPING (PREVIOUS CONSTRUCTION)
87 FILL AND OUTSIDE RINSE PIPING (CURRENT CONSTRUCTION)
91 INSIDE METALLIC RINSE PIPING
93 INSIDE NON-METALLIC RINSE PIPING (FRC44A SERIES)
95 TRACK AND CHAIN GUIDE
97 RINSE DRAIN-OFF PAN
99 DRAIN UNIT (WASH SECTION)

101 DOOR, CURTAIN, BAFFLES AND STRAINERS
105 VENT HOOD
107 EXTENDED HOOD
109 MISCELLANEOUS (WASH SECTION)
113 LOW WATER PROTECTION (STEAM HEAT/WASH TANK)
115 STEAM COIL HEAT
117 PIPING - STEAM COILS
119 STEAM INJECTOR HEAT
121 CONTROL BOX - GAS HEAT
125 GAS BURNER AND FLUE
127 GAS HEAT COMPONENTS
131 ELECTRIC HEAT
133 CONTROL BOX
135 COMPONENT PANEL (CONTROL BOX)
139 WASH MOTOR AND PUMP UNITS (2 UNITS REQUIRED)
141 TRACK AND CHAIN GUIDE
143 WASH ARMS AND TUBES (WASH/RINSE SECTION)
145 FILL AND OUTSIDE RINSE PIPING
149 INSIDE METALLIC RINSE PIPING
151 INSIDE RINSE PIPING (NON-METALLIC)
153 ACTUATOR MECHANISM AND RINSE DRAIN-OFF PAN
155 DRAIN UNIT (WASH/RINSE SECTION)
157 DOORS, CURTAINS, BAFFLES, AND STRAINERS
159 VENT HOOD
161 EXTENDED HOOD
163 MISCELLANEOUS (WASH/RINSE SECTION)
167 LOW WATER PROTECTION (STEAM HEAT/WASH AND RINSE TANK)
169 ELECTRIC HEAT
171 GAS HEAT BURNERS, FLUES, AND WIREWAYS
175 GAS HEAT COMPONENTS
179 STEAM COILS (2 UNITS REQUIRED)
181 STEAM COIL PIPING
185 STEAM INJECTOR AND PREVIOUS CONSTRUCTION STEAM COIL PIPING
189 STEAM INJECTOR HEAT (2 UNITS REQUIRED)

NOTES

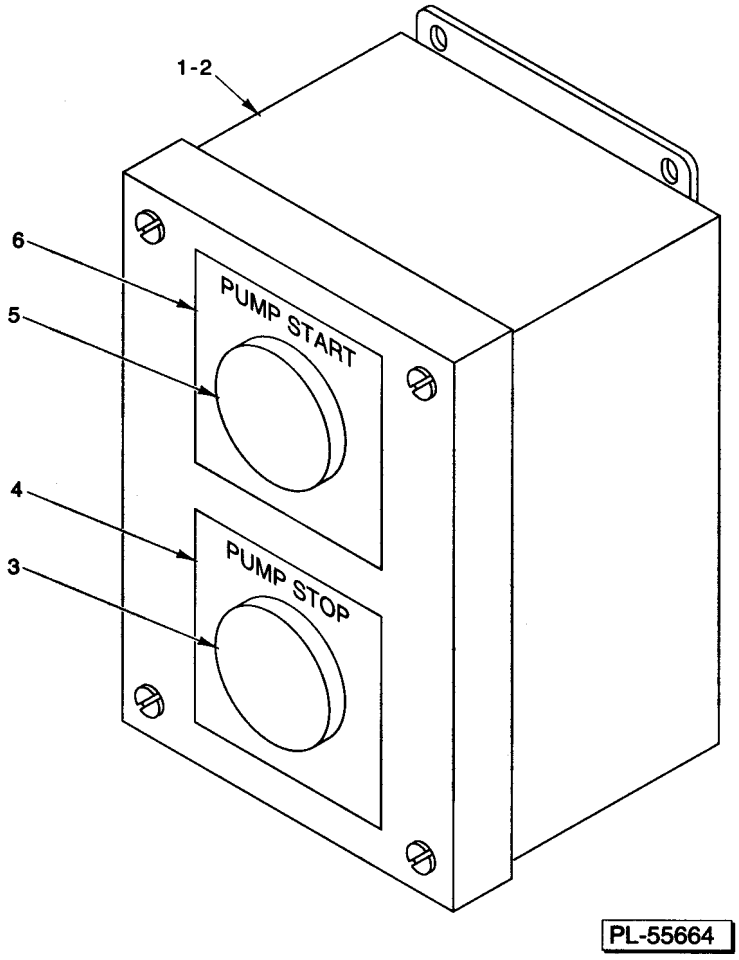

PUSH – BUTTON CONTROL BOX

PUSH - BUTTON CONTROL BOX

PUSH - BUTTON CONTROL BOX

ILLUS. PL-55664	PART NO.	NAME OF PART	AMT.
1	00-115214-00001	Push - Button Station - Remote Mounted (RH) (Incls. Items 3, 4, 5, & 6)	1
2	00-115214-00002	Push - Button Station - Remote Mounted (LH) (Incls. Items 3, 4, 5, & 6)	1
3	00-106656-00001	Button - Push (Stop)	1
4	00-082765	Plate - Identification (Pumps-Stop)	1
5	00-106657-00001	Button - Push (Start)	1
6	00-082764	Plate - Identification (Pumps-Start)	1

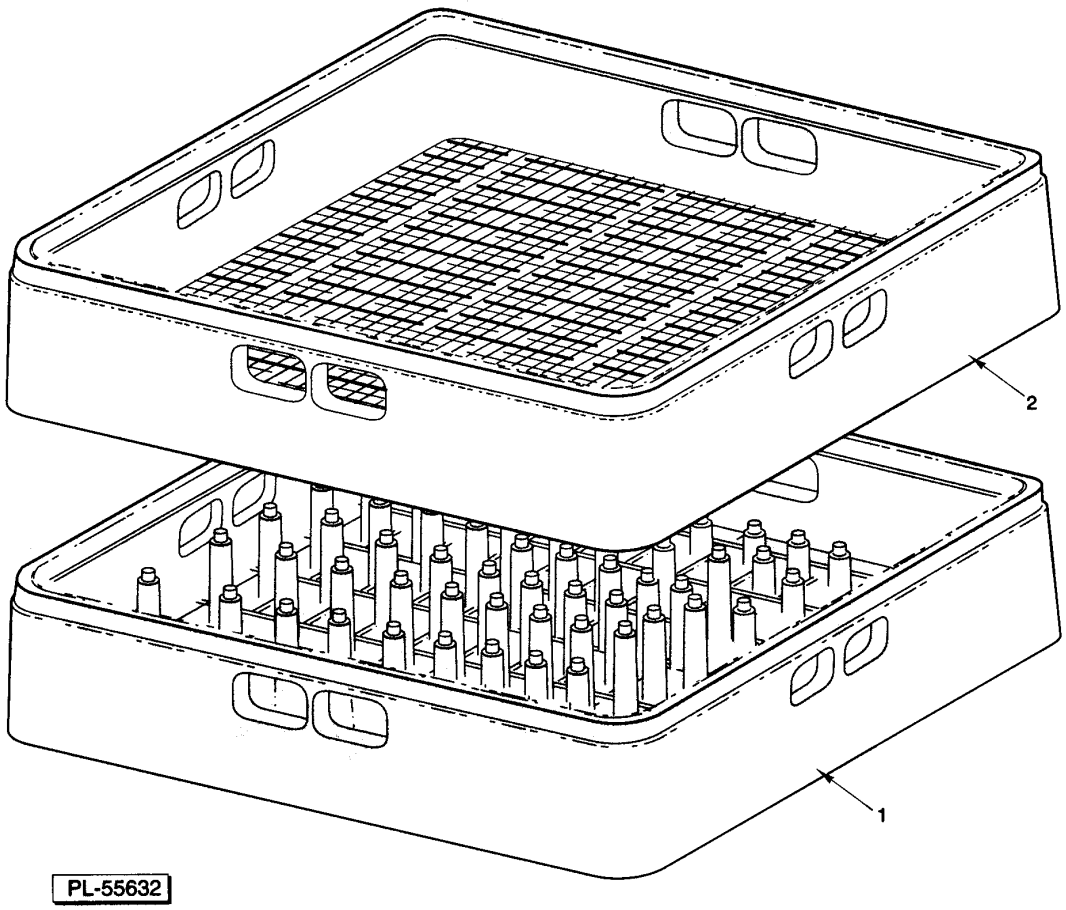

DISH RACKS

DISH RACKS

DISH RACKS

ILLUS. PL-55632	PART NO.	NAME OF PART	AMT.
1	00-315191	Rack - Peg (Packaged)	1
2	00-315193	Rack - Combination (Packaged)	1
	00-295288	Peg Type Tray Rack (P1400)	1
	00-295372	Rack Assy. (250TX) (Tray & Bun Pans) (Packaged)	1

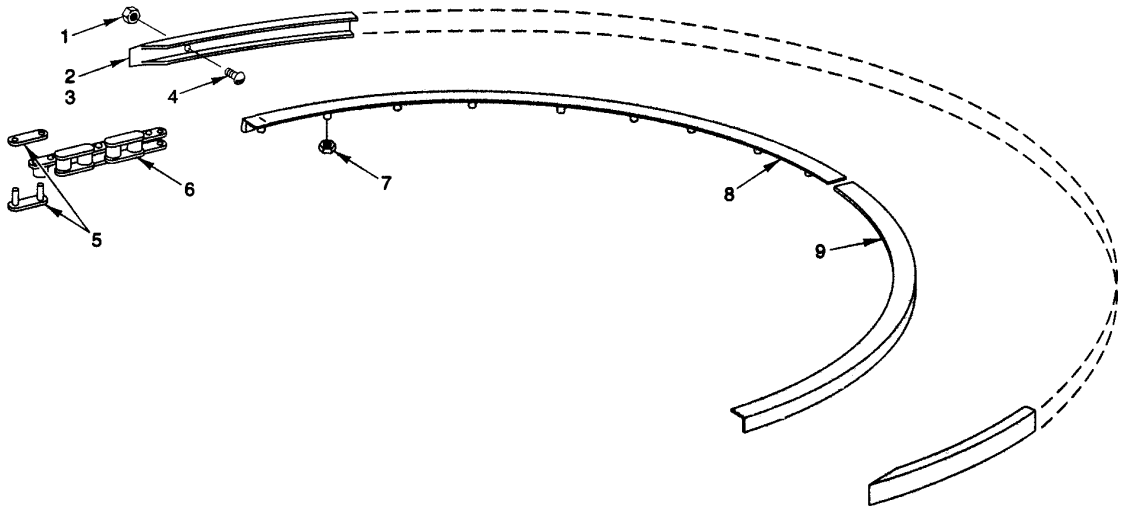

PL-55571

CHAIN, CHAIN GUIDES, AND RACK GUIDES

CHAIN, CHAIN GUIDES, AND RACK GUIDES

CHAIN, CHAIN GUIDES, AND RACK GUIDES

ILLUS. PL-55571	PART NO.	NAME OF PART	AMT.
1	NS-031-15	Stop Nut 10-24 (SST)	11
2	00-118265-00001	Wear Strip - Rack (90 Deg.)	AR
3	00-118265-00002	Wear Strip - Rack (180 Deg.)	AR
*4	SC-053-05	Mach. Screw 10-24 x 3/8 Truss Hd. (SST)	11
5	00-110336-00001	Link - Connecting	1
6	00-110337-00002	Chain - Roller (SST) (Give Length by the Foot)	AR
7	NS-031-15	Stop Nut 10-24 (SST)	20
8	00-289318-00001	Chain Guide Assy. (Flat Drive Only) (RH Rear, LH Front)	1
9	00-289318-00001	Chain Guide Assy. (Flat Drive Only) (RH Front, LH Rear)	1

* Amt. Per 90 Deg. Length.

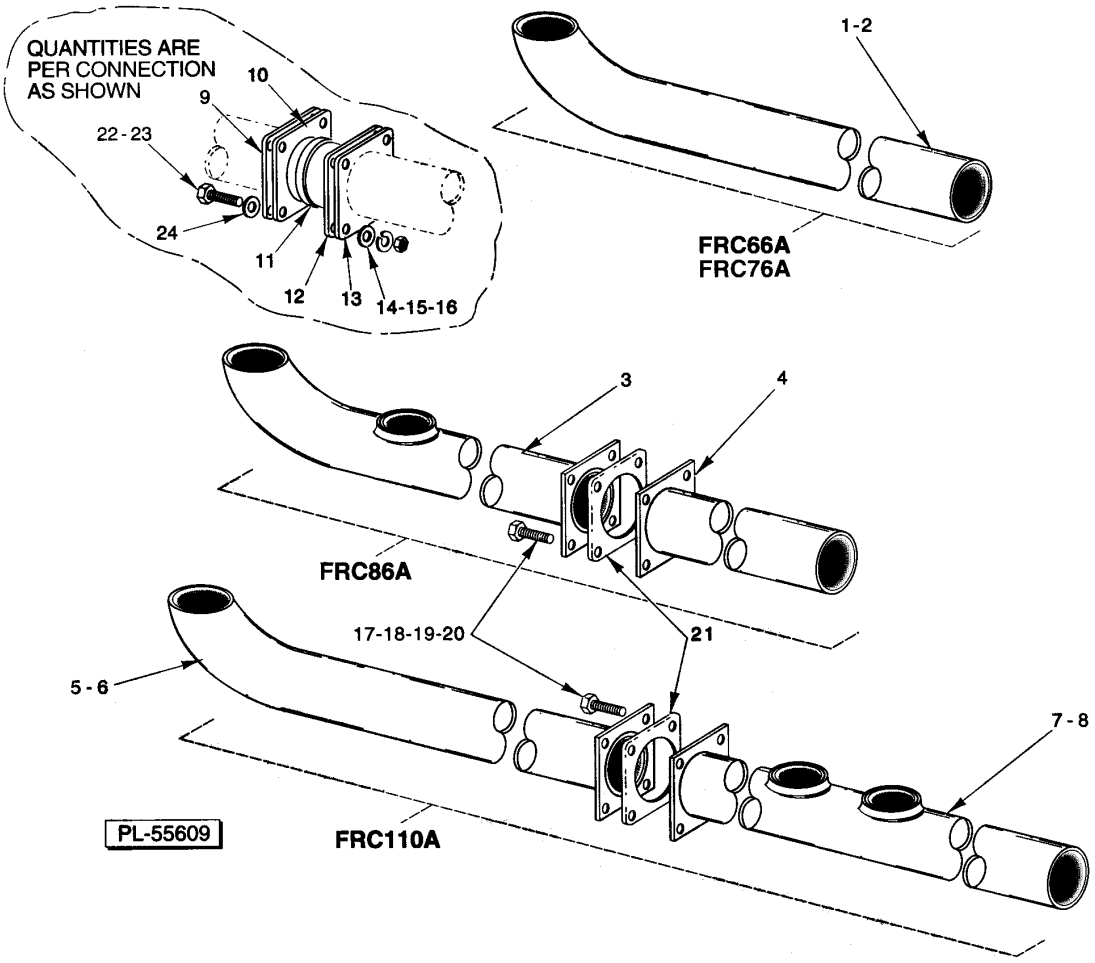

FLOW BACK TUBE

FLOW BACK TUBE

FLOW BACK TUBE

ILLUS. PL-55609	PART NO.	NAME OF PART	AMT.
1	00-274113-00001	Flow Back Tube (R-L) (FRC66A & FRC76A)	1
2	00-274113-00002	Flow Back Tube (L-R) (FRC66A & FRC76A)	1
3	00-436708	Flow Back Tube - Inside (FRC86A)	1
4	00-436710-00001	Flow Back Tube - Outside (FRC86A)	1
5	00-329664	Flow Back Tube - Outside (R-L) (FRC110A)	1
6	00-289502	Flow Back Tube - Outside (L-R) (FRC110A)	1
7	00-329658-00002	Flow Back Tube - Inside (R-L) (FRC110A)	1
8	00-329659-00002	Flow Back Tube - Inside (L-R) (FRC110A)	1
9	00-120115	Retainer - Seal	1
10	00-120603	Gasket - Seal Retainer	1
11	00-077621-00002	Ring - Sealing	1
12	00-120603	Gasket - Seal Retainer	1
13	00-120115	Retainer - Seal	1
14	WS-017-08	Washer (0.328 x 0.625 x 0.062) (SST)	4
15	WL-006-23	Lockwasher 5/16 Helical (SST)	4
16	NS-015-11	Nut 5/16-18 Hex (SST)	4
17	SC-041-15	Cap Screw 5/16-18 x 11/4 Hex Hd	4
18	WS-017-08	Washer (0.328 x 0.625 x 0.062) (SST)	8
19	WL-006-23	Lockwasher 5/16 Helical (SST)	4
20	NS-015-11	Nut 5/16-18 Hex (SST)	4
21	00-120603	Gasket - Seal Retainer	2
22	SC-041-15	Cap Screw 5/16-18 x 11/4 Hex Hd	4
23	00-545595	Sealer (1/8 Rd.)	AR
24	WS-017-08	Washer (0.328 x 0.625 x 0.062) (SST)	4

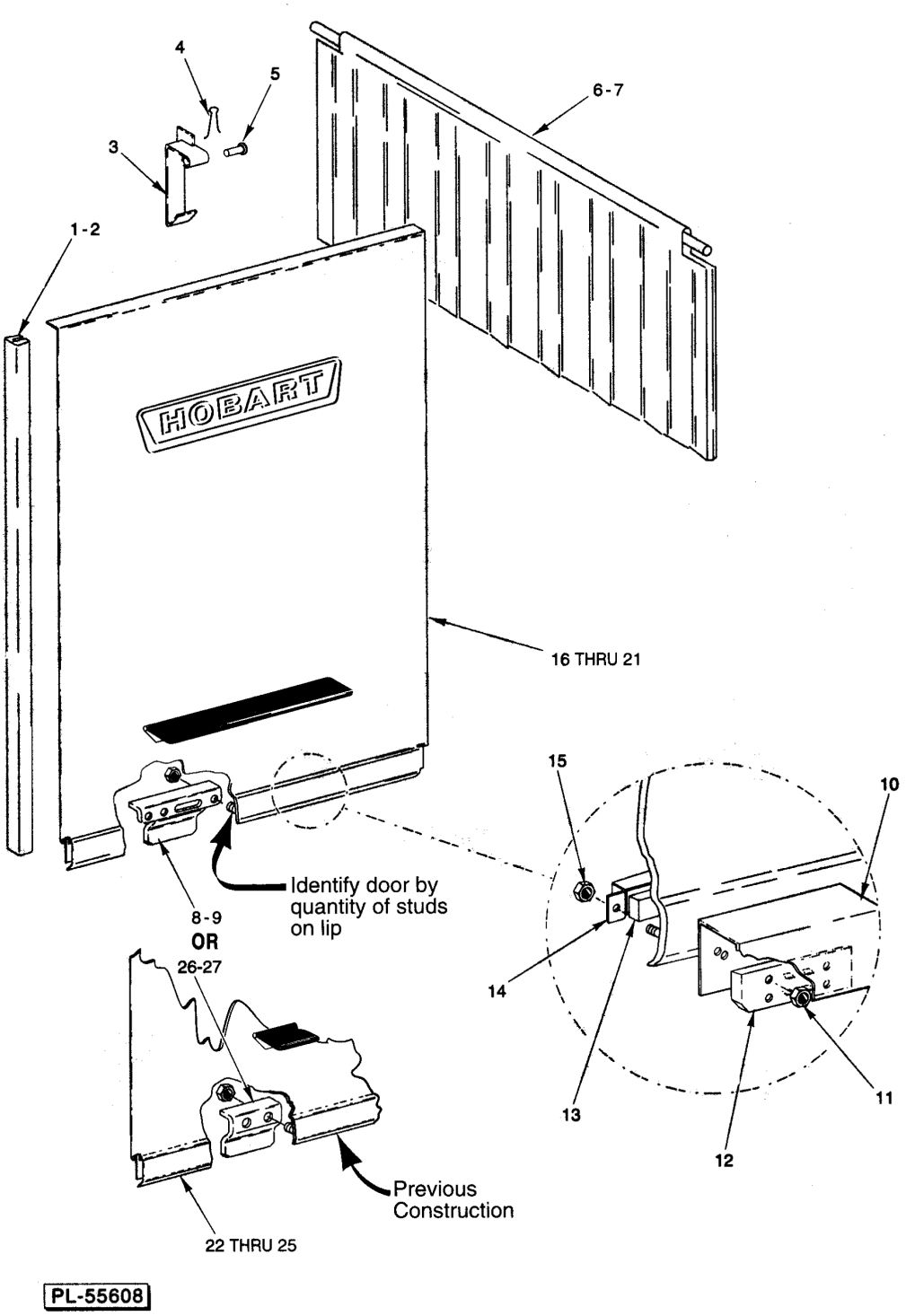

DOOR AND CURTAIN

DOOR AND CURTAIN

DOOR AND CURTAIN

ILLUS. PL-55608	PART NO.	NAME OF PART	AMT.
1	00-112378-00049	Door Slide (26-1/8 Door Height)	2
2	00-112378-00050	Door Slide (32-1/8 Door Height)	2
3	00-185864	Catch - Door	1
4	PC-005-02	Cotter Pin 1/16 x 1/2 (SST)	1
5	00-012114	Pin	1
6	00-120151-00001	Splash Curtain (10-C1)	1
7	00-120266-00001	Curtain Rod	AR
8	00-328065	Actuator - Lift Drain	1
9	NS-031-21	Stop Nut 1/4-20 Hex (SST)	AR
10	00-270996	Insulator - Switch	1
11	NS-031-50	Stop Nut 6-32 Hex (SST)	2
12	00-892896	Kit - Service Reed Switch	1
13	00-290160	Magnet	1
14	00-290159	Retainer - Magnet	1
15	NS-031-50	Stop Nut 6-32 Hex (SST)	2
16	00-328080-00003	Door (26 1/8) (R-L) (4 Studs)	1
17	00-328080-00004	Door (26 1/8) (L-R) (4 Studs)	1
18	00-328081-00003	Door (32 1/8) (R-L) (4 Studs)	1
19	00-328081-00004	Door (32 1/8) (L-R) (4 Studs)	1
20	00-329296-00003	Door (26 1/8) (R-L & L-R) (8 Studs)	1
21	00-329297-00003	Door (32 1/8) (R-L & L-R) (8 Studs)	1
*22		Door (261/8) (R-L)	1
*23		Door (261/8) (L-R)	1
*24		Door (321/8) (R-L)	1
*25		Door (321/8) (L-R)	1
26	00-274767	Actuator - Lift Drain	1
27	NS-031-21	Stop Nut 1/4-20 Hex (SST)	2
	00-120152-00001	Splash Curtain Assy	1

* No longer available. Order either item 16, 17, 18, or 19 & item 8 to convert to present style.

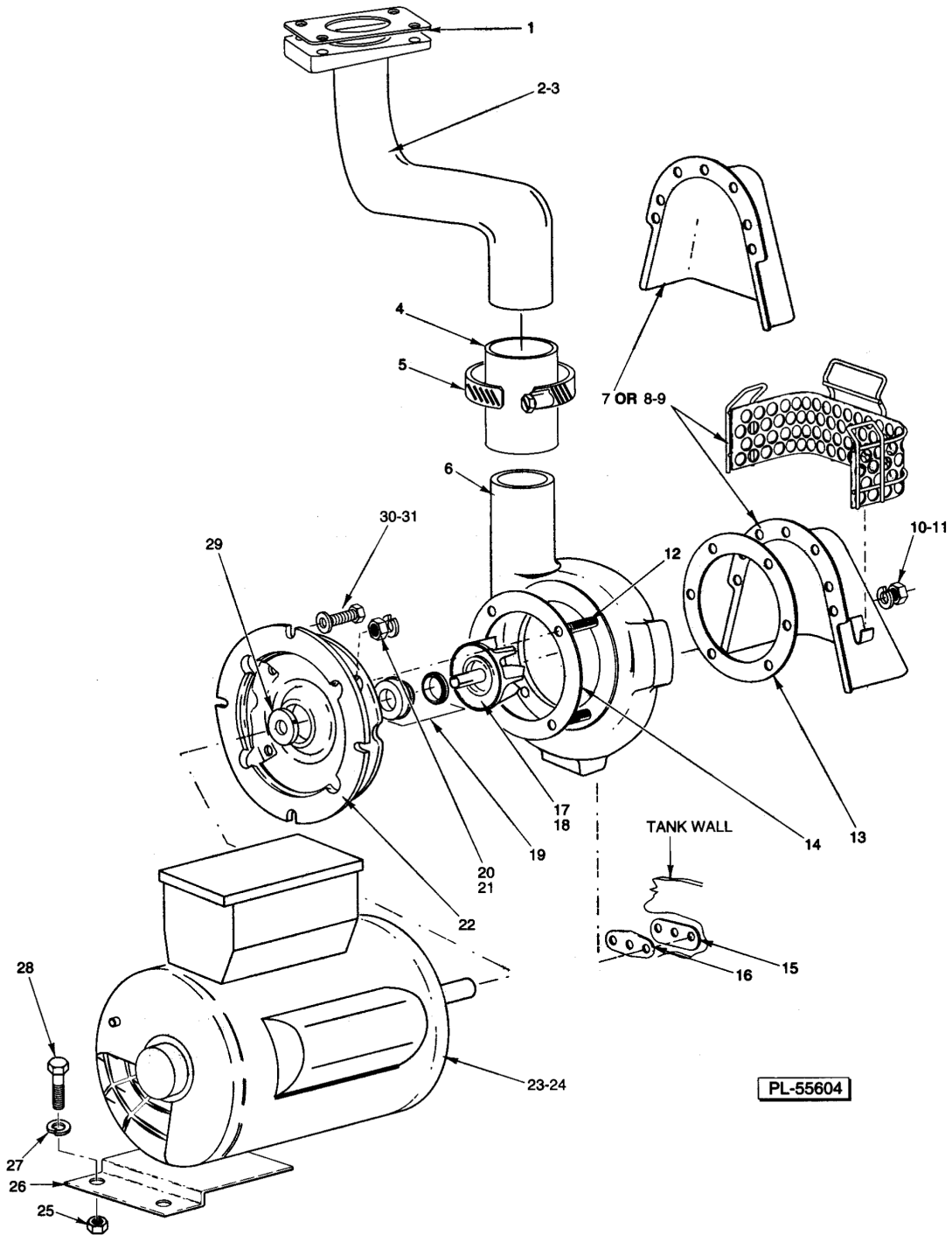

PREWASH MOTOR AND PUMP

PREWASH MOTOR AND PUMP

PREWASH MOTOR AND PUMP

ILLUS. PL-55604	PART NO.	NAME OF PART	AMT.
1	00-270968	Gasket - Wash Pipe	1
2	00-274133	Tube - Discharge (R-L)	1
3	00-274148	Tube - Discharge (L-R) (Not Shown)	1
4	00-749586	Hose - Discharge	1
5	00-542337	Clamp - Hose	2
6	00-274227-00001	Pump Shell (Incls. Item 7)	1
7	00-274223	Shroud (Service Only)	1
8	00-274246	Shroud	1
9	00-328362	Strainer - Pump	1
10	WL-006-23	Lockwasher 5/16 Helical (SST)	10
11	NS-015-11	Nut 5/16-18 Hex (SST)	10
12	00-274227-00005	Stud	AR
13	00-119050	Gasket	1
14	00-274227-00004	Gasket	1
15	00-812776	Support Plate	2
16	00-119051	Gasket - Pump Drain Hole	2
17	00-274227-00008	Impeller & Sleeve (60 Hz.)	1
18	00-274227-00011	Impeller & Sleeve (50 Hz.)	1
19	00-274227-00006	Seal - Shaft	1
20	WL-006-22	Lockwasher 5/16 Light (SST)	4
21	NS-015-11	Nut 5/16-18 Hex (SST)	4
22	00-274227-00003	Adapter	1
23	00-274230-00006	Motor (3 Ph., 60 Hz.) (1 Hp.)	1
24	00-274230-00008	Motor (3 Ph., 50 Hz.) (1 Hp.)	1
25	NS-015-01	Nut 1/4-20 Hex (SST)	2
26	00-812069	Bracket - Motor Support	1
27	WL-006-17	Lockwasher 1/4 Helical (SST)	2
28	SC-041-05	Cap Screw 1/4-20 x 5/8 Hex Hd. (SST)	2
29	00-274227-00002	Clamp	1
30	SC-041-29	Cap Screw 3/8-16 x 7/8 Hex Hd. (SST)	4
31	WS-006-44	Washer (SST)	4

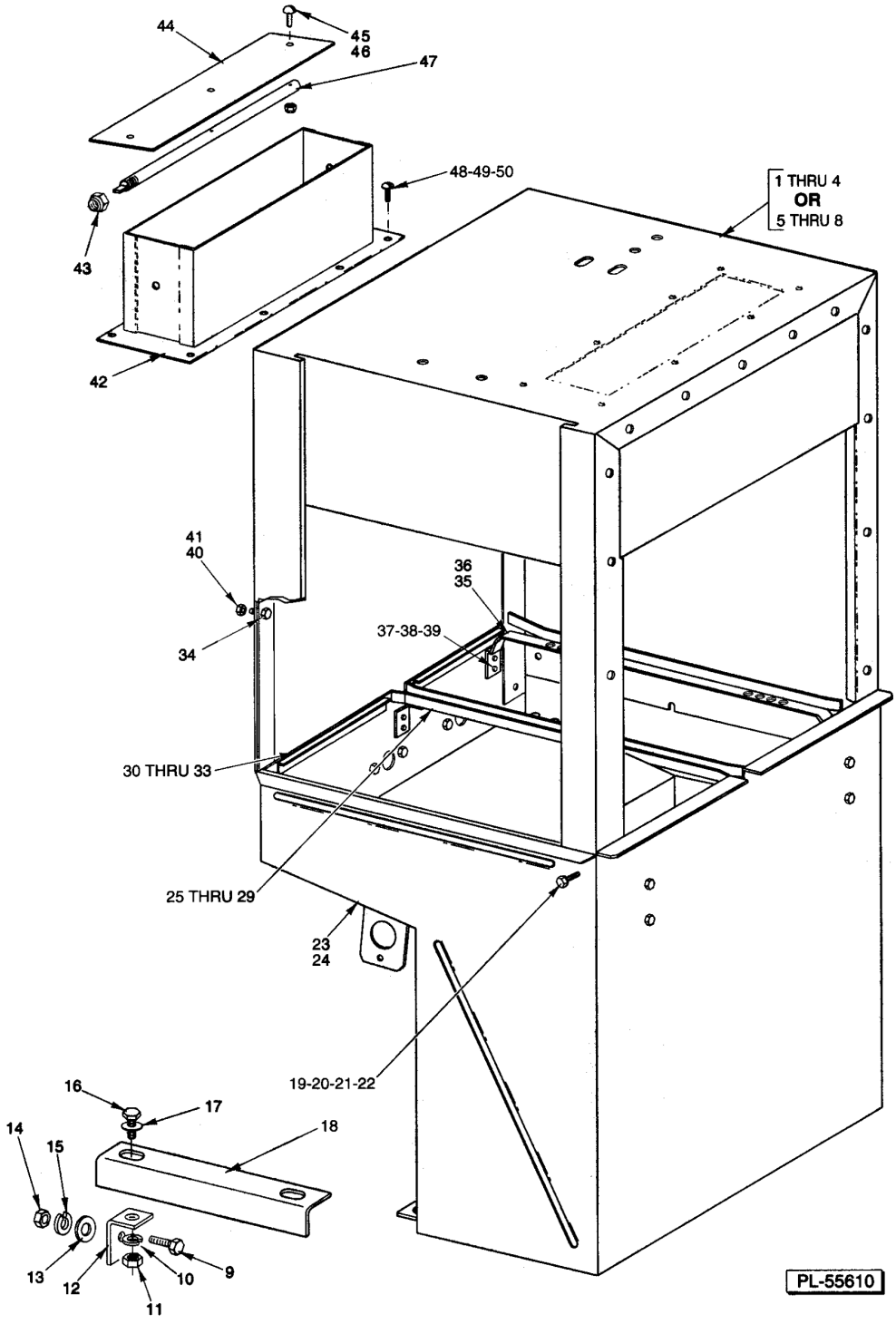

PREWASH CHAMBER AND TANK

PREWASH CHAMBER AND TANK

PREWASH CHAMBER AND TANK

ILLUS. PL-55610	PART NO.	NAME OF PART	AMT.
1	00-435775	Chamber Assy. (261/8 Door Height) (R-L)	1
2	00-435777	Chamber Assy. (261/8 Door Height) (L-R)	1
3	00-435776	Chamber Assy. (321/8 Door Height) (R-L)	1
4	00-435778	Chamber Assy. (321/8 Door Height) (L-R)	1
5	00-274106-00001	Chamber Assy. (26 1/8 Door Height) (R-L)	1
6	00-274129-00001	Chamber Assy. (26 1/8 Door Height) (L-R)	1
7	00-274577-00001	Chamber Assy. (32 1/8 Door Height) (R-L)	1
8	00-274702-00001	Chamber Assy. (32 1/8 Door Height) (L-R)	1
9	SC-041-11	Cap Screw 5/16-18 x 3/4 Hex Hd. (SST)	2
10	WL-006-23	Lockwasher 5/16 Helical (SST)	4
11	NS-015-11	Nut 5/16-18 Hex (SST)	4
12	00-274091	Bracket - Strut Support	2
13	WS-017-08	Washer (0.328 x 0.625 x 0.062) (SST)	2
14	NS-015-11	Nut 5/16-18 Hex (SST)	2
15	WL-006-23	Lockwasher 5/16 Helical (SST)	2
16	SC-041-11	Cap Screw 5/16-18 x 3/4 Hex Hd. (SST)	4
17	WS-017-01	Washer 0.328 x 0.875 x 0.062 (SST)	4
18	00-274092-00001	Strut - Tank-to-Tank	2
19	SC-041-11	Cap Screw 5/16-18 x 3/4 Hex Hd. (SST)	4
20	WL-006-23	Lockwasher 5/16 Helical (SST)	6
21	NS-015-11	Nut 5/16-18 Hex (SST)	6
22	WS-017-01	Washer 0.328 x 0.875 x 0.062 (SST)	6
23	00-274467	Tank Assy. (R-L)	1
24	00-274466	Tank Assy. (L-R)	1
25	00-274746-00001	Guide - Chain	1
26	SC-041-30	Cap Screw 3/8-16 x 1 Hex Hd. (SST)	2
27	WS-006-27	Washer	4
28	WL-006-27	Lockwasher 3/8 Helical (SST)	2
29	NS-015-13	Nut 3/8-16	2
30	00-435052	Support - Tank	2
31	SC-041-05	Cap Screw 1/4-20 x 5/8 Hex Hd. (SST)	4
32	WL-006-17	Lockwasher 1/4 Helical (SST)	4
33	NS-015-01	Nut 1/4-20 Hex (SST)	4
34	SC-041-05	Cap Screw 1/4-20 x 5/8 Hex Hd. (SST)	15
35	00-274736-00001	Rack Track (LH)	1
36	00-274736-00002	Rack Track (RH)	1
37	NS-015-11	Nut 5/16-18	4
38	WL-006-23	Lockwasher 5/16	4
39	SC-041-12	Cap Screw 5/16-18 x 7/8	4
40	WL-006-17	Lockwasher 1/4 Helical (SST)	15
41	NS-015-01	Nut 1/4-20 Hex (SST)	15
42	00-075621	Vent Stack Assy	1
43	NS-036-12	Stop Nut 3/8-24 Hex Special (SST)	1
44	00-075623	Damper - Vent Stack	1
45	SC-021-11	Mach. Screw 6-32 x 3/4 Slotted Rd. Hd. (SST)	3
46	NS-031-50	Stop Nut 6-32 Hex (SST)	3
47	00-064919	Shaft - Damper	1
48	SC-053-02	Mach. Screw 10-24 x 1/2 Slotted Truss Hd. (SST)	8
49	NS-031-15	Stop Nut 10-24 Hex (SST)	8
50	00-508453	Sealer	AR

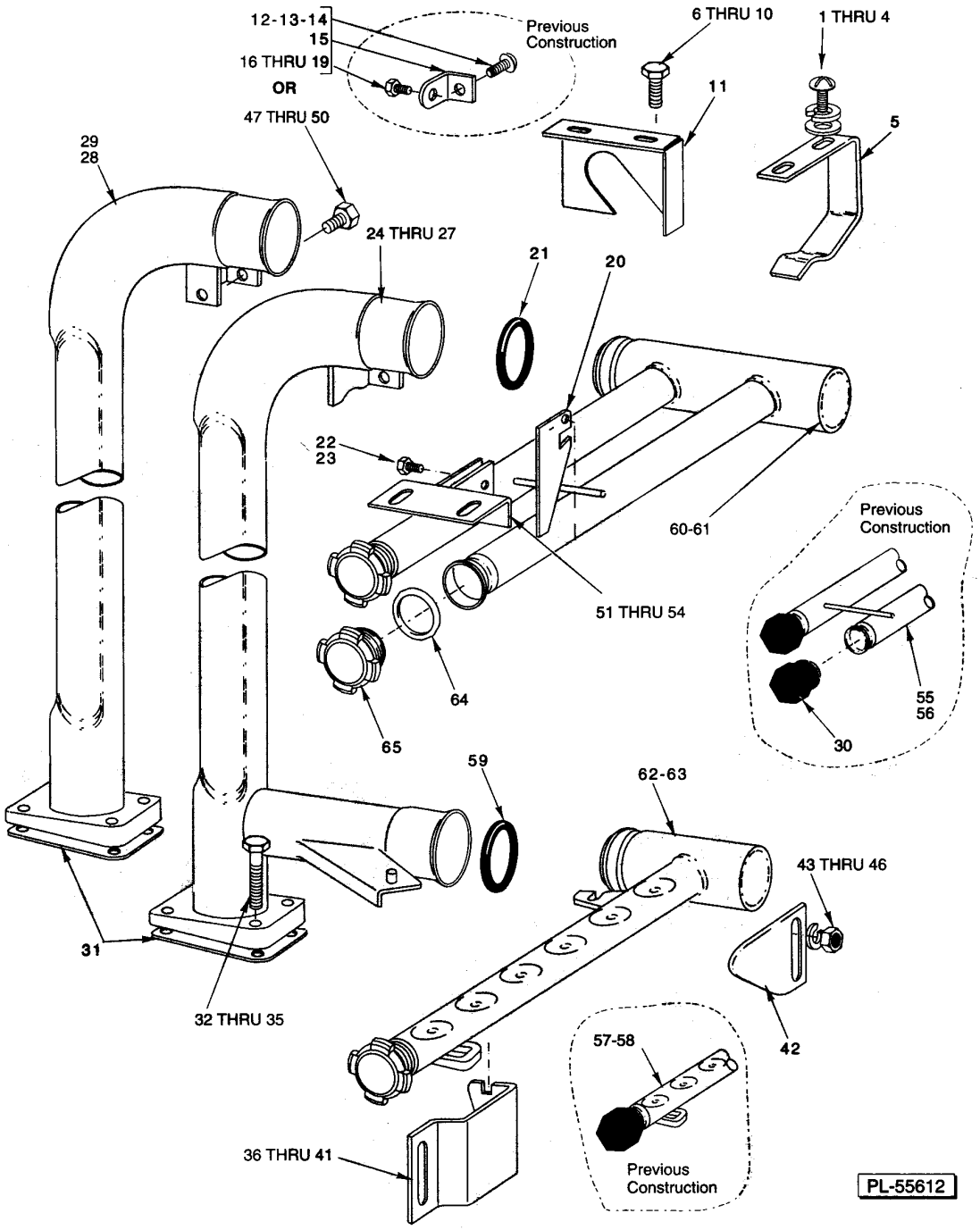

PREWASH ARMS AND TUBES

PREWASH ARMS AND TUBES

PREWASH ARMS AND TUBES

ILLUS. PL-55612	PART NO.	NAME OF PART	AMT.
1	SC-125-85	Mach. Screw 1/4-20 x 5/8 Truss Hd. (SST)	2
2	WS-022-01	Washer (SST)	4
3	WL-006-17	Lockwasher 1/4 Helical (SST)	2
4	NS-015-01	Nut 1/4-20 Hex (SST)	2
5	00-271026	Hanger - Upper Wash Arm	1
6	SC-041-11	Cap Screw 5/16-18 x 3/4 Hex Hd. (SST)	2
7	WS-017-01	Washer 0.328 x 0.875 x 0.062 (SST)	2
8	WS-017-08	Washer (0.328 x 0.625 x 0.062) (SST)	2
9	WL-006-23	Lockwasher 5/16 Helical (SST)	2
10	NS-015-11	Nut 5/16-18 Hex (SST)	2
11	00-271029	Guide - Upper Wash Arm	1
12	SC-053-42	Mach. Screw 1/4-20 x 5/8 Truss Hd. (SST)	1
13	WL-006-17	Lockwasher 1/4 Helical (SST)	1
14	NS-015-01	Nut 1/4-20 Hex (SST)	1
15	00-185732	Bracket	1
16	SC-041-05	Cap Screw 1/4-20 x 5/8 Hex Hd. (SST)	1
17	WS-022-01	Washer (SST)	1
18	WL-006-17	Lockwasher 1/4 Helical (SST)	1
19	NS-015-01	Nut 1/4-20 Hex (SST)	1
20	00-289760	Latch	1
21	00-067500-00019	O-Ring	1
22	SC-041-01	Cap Screw 1/4-20 x 3/4 Hex Hd. (SST)	2
23	NS-031-19	Stop Nut 1/4-20 Elastic (SST)	2
24	00-274135	Wash Pipe (R-L) (26 1/8 Ht.)	1
25	00-274138	Wash Pipe (L-R) (261/8 Ht.)	1
26	00-274725	Wash Pipe (R-L) (321/8 Ht.)	1
27	00-274728	Wash Pipe (L-R) (32 1/8 Ht.)	1
28	00-274145	Wash Pipe (261/8 Ht.)	1
29	00-274726	Wash Pipe (321/8 Ht.)	1
30	00-475087	Plug - Wash Arm	3
31	00-270968	Gasket - Wash Pipe	1
32	SC-041-68	Cap Screw 5/16-18 x 1-7/8 Hex Hd. (SST)	4
33	WS-017-08	Washer (0.328 x 0.625 x 0.062) (SST)	8
34	WL-006-23	Lockwasher 5/16 Helical (SST)	4
35	NS-015-11	Nut 5/16-18 Hex (SST)	4
36	00-274108-00002	Catch - Adjustable (R-L)	1
37	00-274108-00001	Catch - Adjustable (L-R)	1
38	NS-015-11	Nut 5/16-18 Hex (SST)	2
39	WL-006-23	Lockwasher 5/16 Helical (SST)	2
40	WS-017-08	Washer (0.328 x 0.625 x 0.062) (SST)	2
41	SC-041-11	Cap Screw 5/16-18 x 3/4 Hex Hd. (SST)	2
42	00-274222	Support - Adjustable	1
43	NS-015-11	Nut 5/16-18 Hex (SST)	2
44	WL-006-23	Lockwasher 5/16 Helical (SST)	2
45	WS-017-08	Washer (0.328 x 0.625 x 0.062) (SST)	2
46	SC-041-11	Cap Screw 5/16-18 x 3/4 Hex Hd. (SST)	2
47	SC-041-01	Cap Screw 1/4-20 x 3/4 Hex Hd. (SST)	1
48	WS-022-01	Washer (SST)	2
49	WL-006-17	Lockwasher 1/4 Helical (SST)	1
50	NS-015-01	Nut 1/4-20 Hex (SST)	1
51	00-812821	Bracket	1
52	WS-017-08	Washer (0.328 x 0.625 x 0.062) (SST)	2
53	WL-006-23	Lockwasher 5/16 Helical (SST)	2
54	NS-015-11	Nut 5/16-18 Hex (SST)	2
*55	00-274136	NLA - Obsolete--Wash Arm - Upper (R-L)	1

PREWASH ARMS AND TUBES

ILLUS. PL-55612	PART NO.	NAME OF PART	AMT.
*56	00-274130	Wash Arm - Upper (L-R)	1
*57	00-274131	NLA - Obsolete--Wash Arm - Lower (R-L)	1
*58	00-274155	Wash Arm - Lower (L-R)	1
59	00-067500-00110	O-Ring	1
60	00-749426	Wash Arm - Upper (R-L)	1
61	00-749425	Wash Arm - Upper (L-R)	1
62	00-749424	Wash Arm - Lower (R-L)	1
63	00-749423	Wash Arm - Lower (L-R)	1
64	00-067500-00127	O-Ring - AS568 Size 124 (1.237 x .103)	3
65	00-475589	Plug - Wash Arm	3

* Obsolete part number. For replacement, use item 60, 61, 62, or 63 with items 64 and 65.

NOTES

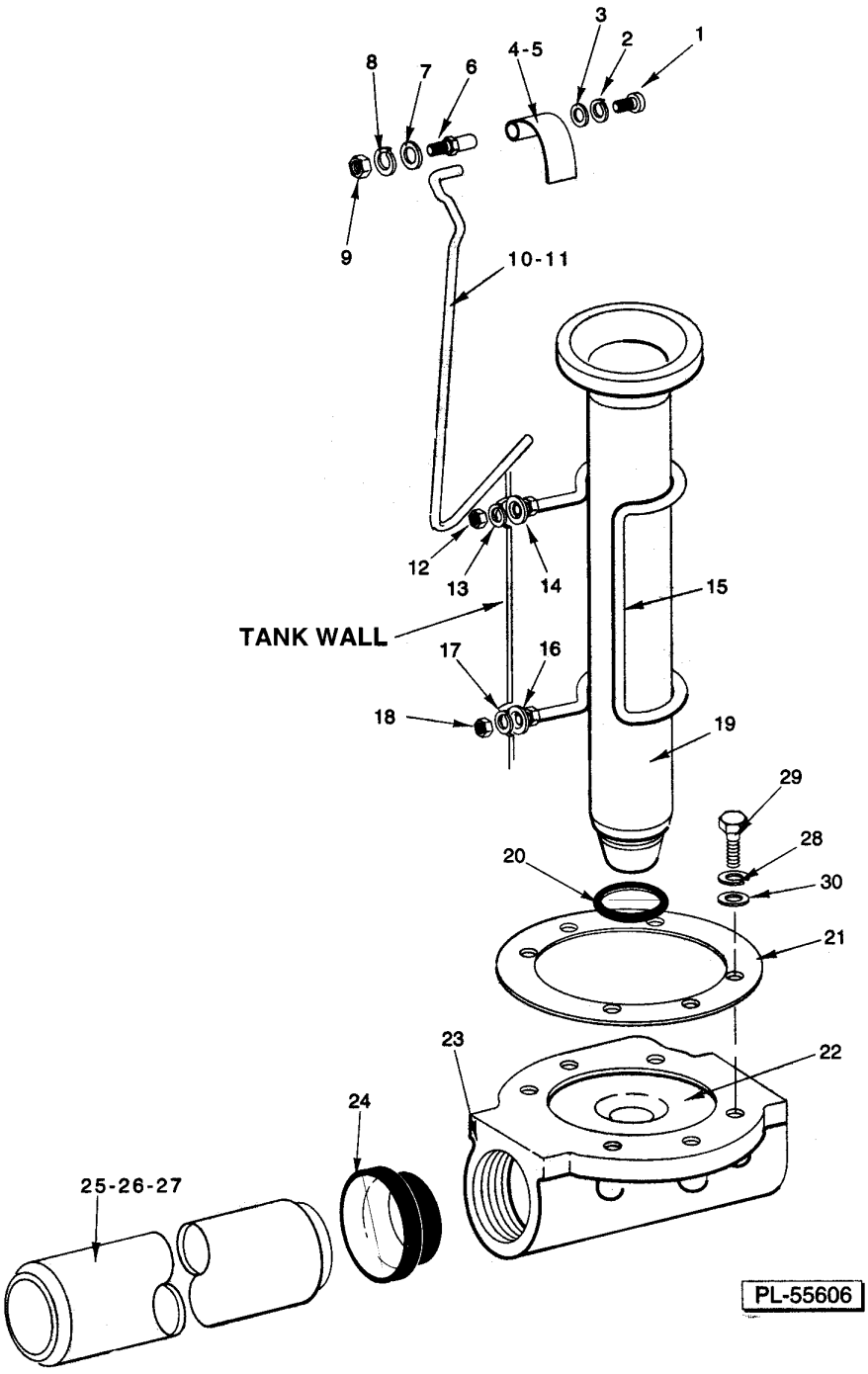
1
2
3
4-5
6
7
8
9
10-11
12
13
14
15
TANK WALL
16
17
18
19
20
21
22
23
24
25-26-27
28
29
30
PL-55606

DRAIN

DRAIN

DRAIN

ILLUS. PL-55606	PART NO.	NAME OF PART	AMT.
1	SC-021-22	Mach. Screw 10-24 x 3/8 Slotted Rd. Hd. (SST)	1
2	WL-006-07	Lockwasher #10 Helical (SST)	1
3	WS-023-34	Washer (SST)	1
4	00-274096	Drain Lever (R-L)	1
5	00-271070	Drain Lever (L-R)	1
6	00-119116	Axle - Drain Lever	1
7	WS-022-01	Washer (SST)	1
8	WL-006-17	Lockwasher 1/4 Helical (SST)	1
9	NS-015-01	Nut 1/4-20 Hex (SST)	1
10	00-274080	Lift Rod Overflow (R-L)	1
11	00-274079	Lift Rod Overflow (L-R)	1
12	NS-015-11	Nut 5/16-18 Hex (SST)	2
13	WL-006-23	Lockwasher 5/16 Helical (SST)	1
14	WS-017-01	Washer 0.328 x 0.875 x 0.062 (SST)	2
15	00-270952	Retainer	1
16	WS-017-01	Washer 0.328 x 0.875 x 0.062 (SST)	2
17	WL-006-23	Lockwasher 5/16 Helical (SST)	1
18	NS-015-11	Nut 5/16-18 Hex (SST)	2
19	00-119099-00002	Tube - Overflow	1
20	00-067500-00120	O-Ring	1
21	00-289464	Gasket - Drain	1
22	00-270947	Sleeve - Drain Body	1
23	00-289465	Drain Body	1
24	00-328813	Bushing - Drain	AR
25	00-274132-00001	Pipe - Drain (R-L) (FRC66A, FRC76A, & FRC110A)	1
26	00-274132-00002	Pipe - Drain (L-R) (FRC66A, FRC76A, & FRC110A)	1
27	00-274132-00006	Pipe - Drain (FRCS86A)	1
28	WL-006-28	Lockwasher 3/8 Helical (SST)	6
29	SC-041-28	Cap Screw 3/8-16 x 3/4 Hex Hd. (SST)	6
30	WS-006-44	Washer (SST)	6

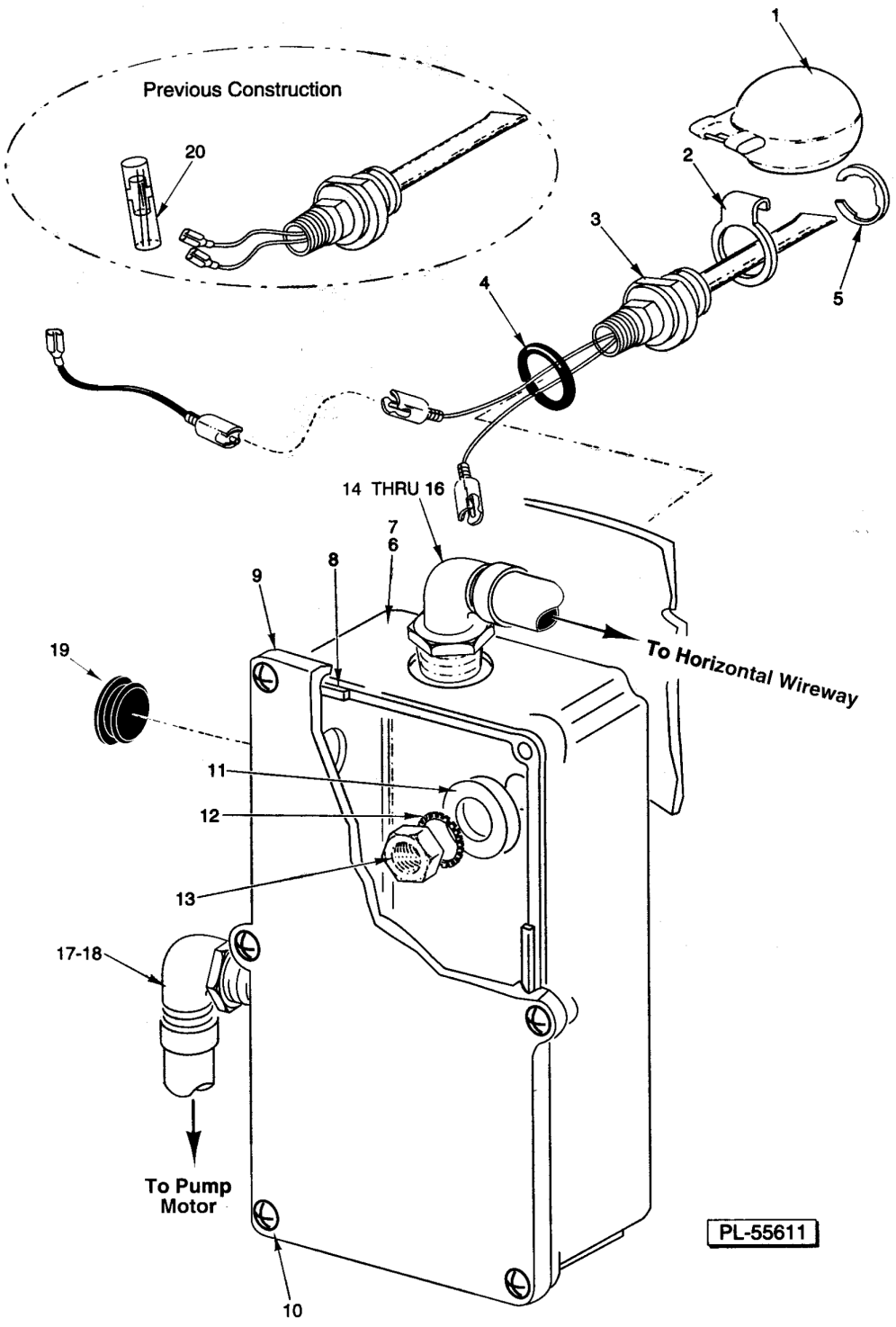

WATER LEVEL FLOATS

WATER LEVEL FLOATS

WATER LEVEL FLOATS

ILLUS. PL-55611	PART NO.	NAME OF PART	AMT.
1	00-122674	Float Assy	2
2	00-112467	Retainer - Float	2
3	00-328495	Switch & Probe Assy. (Includes Items 1, 2, & 5) (Must Order 2 Jumper Wires, Part #328758)	2
4	00-067500-00072	O-Ring	2
5	RR-010-13	Retaining Ring	2
6	00-274224	Box - Probe (R-L)	1
7	00-274097	Box - Probe (L-R)	1
8	00-112005	Gasket (Lid)	1
9	00-289146-00001	Lid & Gasket Assy. (Incls. Item 8)	1
10	SD-012-20	Self-Tapping Screw 8-32 x 1/2 Phil. Truss Hd., Type T	6
11	WS-010-40	Washer - Thrust	2
12	WL-014-31	Lockwasher 1/2 External Shakeproof (SST)	2
13	NS-018-28	Jam Nut 1/2-20 Hex (SST)	2
14	FE-024-58	Connector - Straight (Non-Metallic) Sealtite (3/4 Male Thd. x 3/4 Flex. Cnd.)	1
15	FE-024-66	Connector - 90 Deg. (Non-Metallic) Sealtite (3/4 Male Thd. x 3/4 Flex. Cnd.)	1
16	FE-008-11	Gasket - Electrical	AR
17	FE-024-61	Connector 1/2 x 45 Deg. (Non-Metallic) Sealtite (1/2 Male Thd. x 1/2 Flex. Cnd.)	2
18	FE-008-10	1/2 Gasket Assy	2
19	00-065890-00085	Line - Splice	AR
20	PB-004-08	Plug - Button 7/8 (Heyco 2703)	1

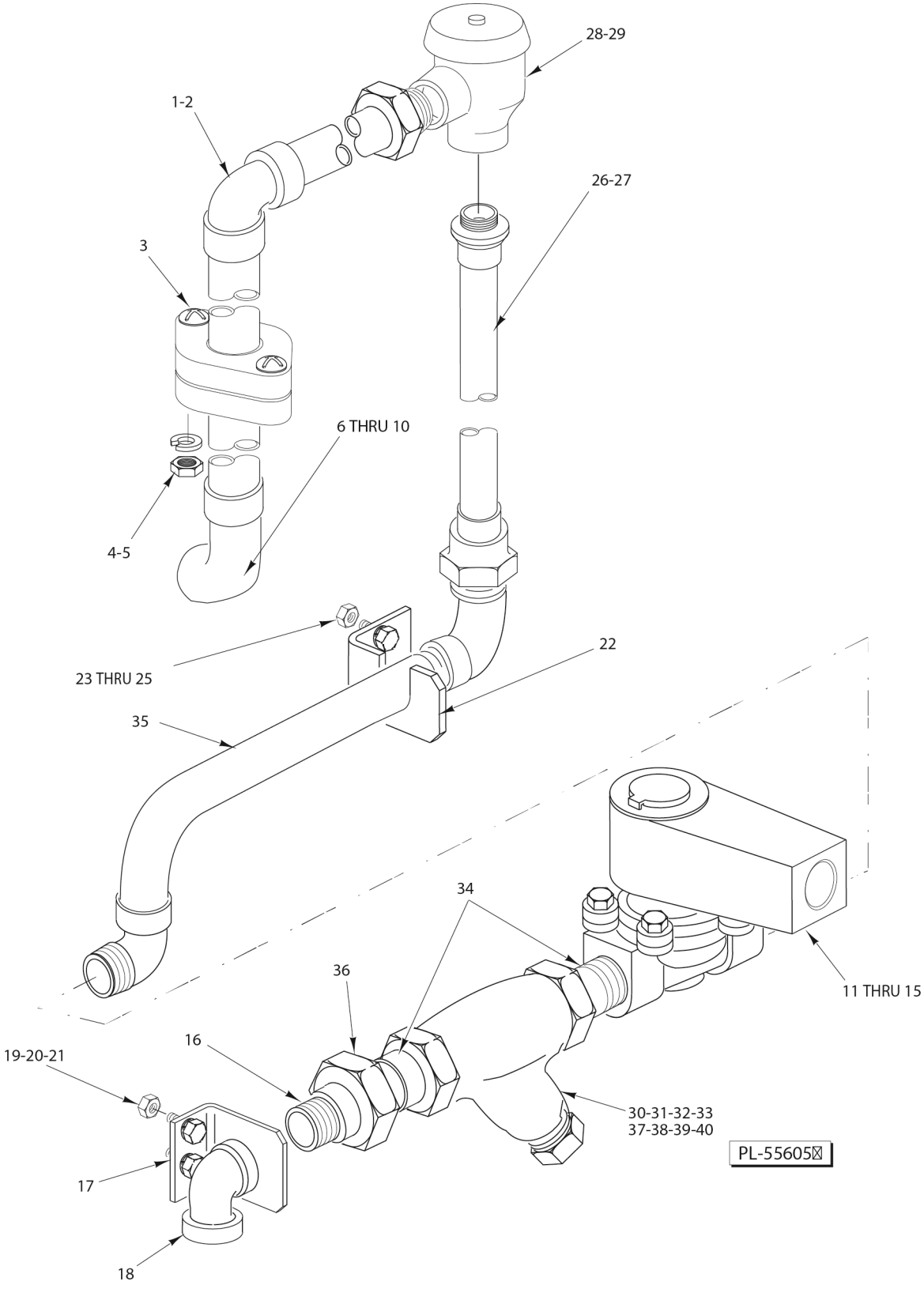

PREWASH TEMPERATURE CONTROL - PIPING

PREWASH TEMPERATURE CONTROL - PIPING

ILLUS. PL-55605	PART NO.	NAME OF PART	AMT.
1	00-274486	Piping - Upper Prewash	1
2	00-276407	Gasket - Rinse Pipe	1
3	SC-128-07	Mach. Screw 5/16-18 x 11/4 Rd. Hd. (SST)	2
4	WL-006-22	Lockwasher 5/16 Light (SST)	2
5	NS-015-11	Nut 5/16-18 Hex (SST)	2
6	00-289971-00001	Inside Fill Pipe Assy. (L-R) (FRC86A & FRC110A)	1
7	00-289971-00002	Inside Fill Pipe Assy. (R-L) (FRC86A & FRC110A)	1
8	00-812779-00001	Inside Fill Pipe Assy. (L-R) (FRC66A & FRC76A)	1
9	00-812779-00002	Inside Fill Pipe Assy. (R-L) (FRC66A & FRC76A)	1
10	00-067500-00013	O-Ring	1
11	00-270329-00002	Valve - Solenoid 240 V. (FRCS66A) (Incls. Items 10 & 12)	1
12	00-270318-00002	Coil - Solenoid Valve (240 V.)	1
13	00-270329-00001	Valve - Solenoid 120 V. (Incls. Items 14 & 15)	1
14	00-270318-00001	Coil - Solenoid Valve (120 V.)	1
15	00-270336	Service Kit - Solenoid Valve	1
16	FP-041-55	Pipe 3/4 x 2 1/8 (Brass)	1
17	00-435797	Bracket - Piping	1
18	FP-015-23	Elbow 3/4 x 90 Deg. (Brass)	1
19	SC-041-10	Cap Screw 5/16-18 x 5/8 Hex Hd. (SST)	2
20	WL-006-22	Lockwasher 5/16 Light (SST)	2
21	NS-015-11	Nut 5/16-18 Hex (SST)	2
22	00-274481-00001	Bracket - Piping (R-L)	1
23	SC-041-10	Cap Screw 5/16-18 x 5/8 Hex Hd. (SST)	2
24	WL-006-22	Lockwasher 5/16 Light (SST)	2
25	NS-015-11	Nut 5/16-18 Hex (SST)	2
26	00-292911-00003	Piping (433/8)	1
27	00-292911-00004	Piping (493/8)	1
28	00-292909-00002	Breaker - Vacuum 1/2 (Incls. Item 29)	1
29	00-292910	Vacuum Breaker Float & Seal Assy	1
*30	00-186922	Strainer - Line (3/4 In.) (Brass) (Kitz) (Incls. Items 31, 32, & 33) (Alternate to Item 37)	1
31	00-186923	Plug - Branch	1
32	00-186924	Gasket - Branch Plug	1
33	00-186925	Screen - Line Strainer	1
34	FP-041-50	Pipe 3/4 x 13/8 Brass TBE	2
35	00-274484	Piping - Lower	1
36	FP-022-18	Union - Pipe 3/4 Straight Female (Brass)	1
*37	00-186922	Strainer - Line (3/4 In.) (Brass) (Apollo / Conbraco) (Incls. Items 38, 39, & 40) (Alternate to Item 30)	1
38	00-749802-00001	Cap	1
39	00-749802-00002	Gasket	1
40	00-749802-00003	Screen (80 Mesh)	1

* Kitz line strainer is approx. 1/4" shorter than Apollo / Conbraco.

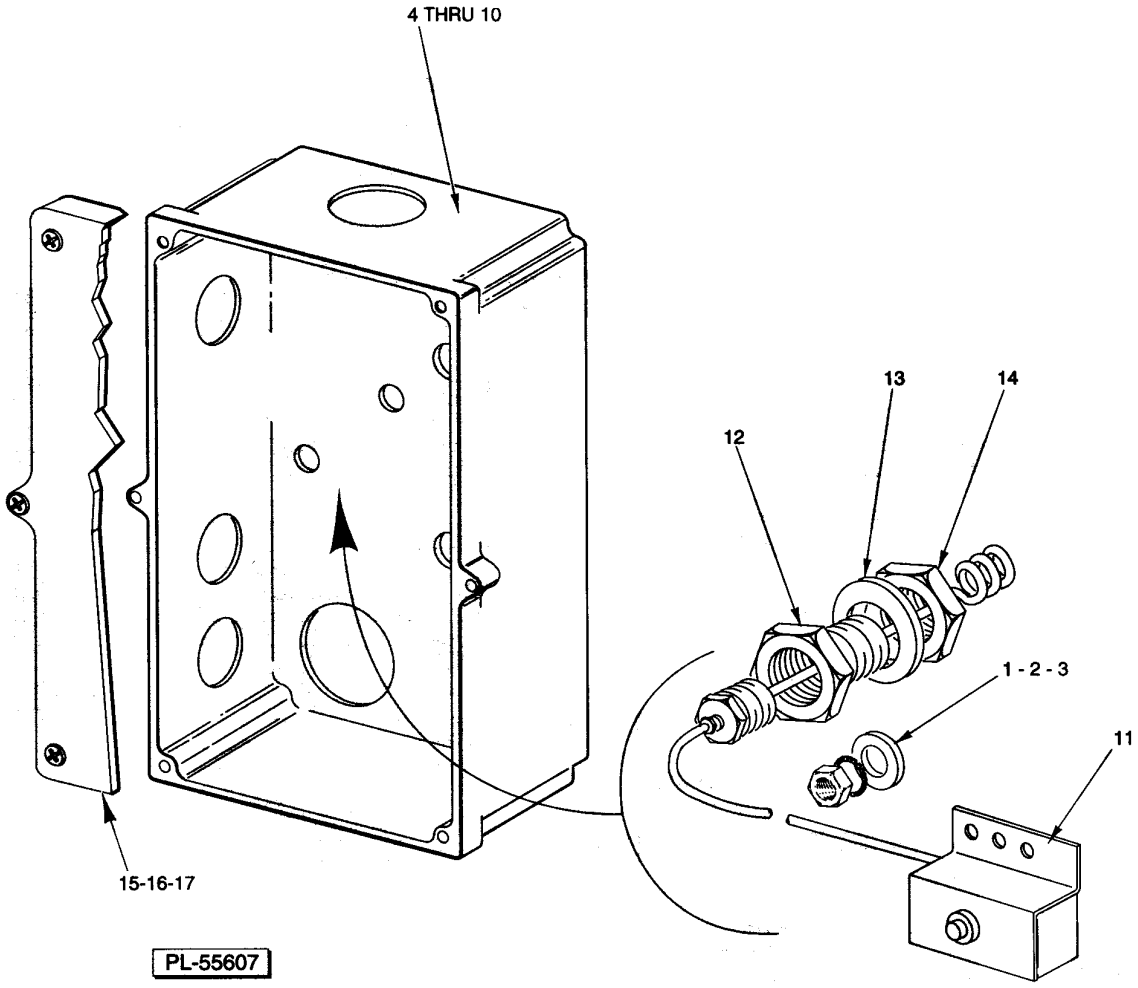

PREWASH TEMPERATURE CONTROL – ELECTRICAL

PREWASH TEMPERATURE CONTROL - ELECTRICAL

PREWASH TEMPERATURE CONTROL - ELECTRICAL

ILLUS. PL-55607	PART NO.	NAME OF PART	AMT.
1	NS-011-18	Nut 10-24 Hex (SST)	2
2	WL-006-07	Lockwasher #10 Helical (SST)	2
3	WS-019-06	Washer (SST)	2
4	00-274253	Box - Float & Probe (R-L) (Previous Construction)	1
5	00-274254	Box - Float & Probe (L-R) (Previous Construction)	1
6	00-749116	Box - Float & Probe (R-L)	1
7	00-749115	Box - Float & Probe (L-R)	1
8	FE-007-03	Connector - 90 Deg. Sealtite (1/2 Male Thd. x 3/8 Flex. Cnd.)	1
9	FE-007-01	Connector - Straight Sealtite (1/2 Male Thd. x 3/8 Flex. Cnd.)	1
10	FE-008-10	1/2 Gasket Assy	1
11	00-294681-021-6	Thermostat - Tank Heat	1
12	00-079531	Adapter - Tank	1
13	WS-012-40	Washer (SST)	1
14	FP-053-05	Pipe Lock Nut 1/2 NPSL (SST)	1
15	00-289146-00001	Lid & Gasket Assy. (Incls. Item 16)	1
16	00-112005	Gasket (Lid)	1
17	SD-012-20	Self-Tapping Screw 8-32 x 1/2 Phil. Truss Hd., Type T	6

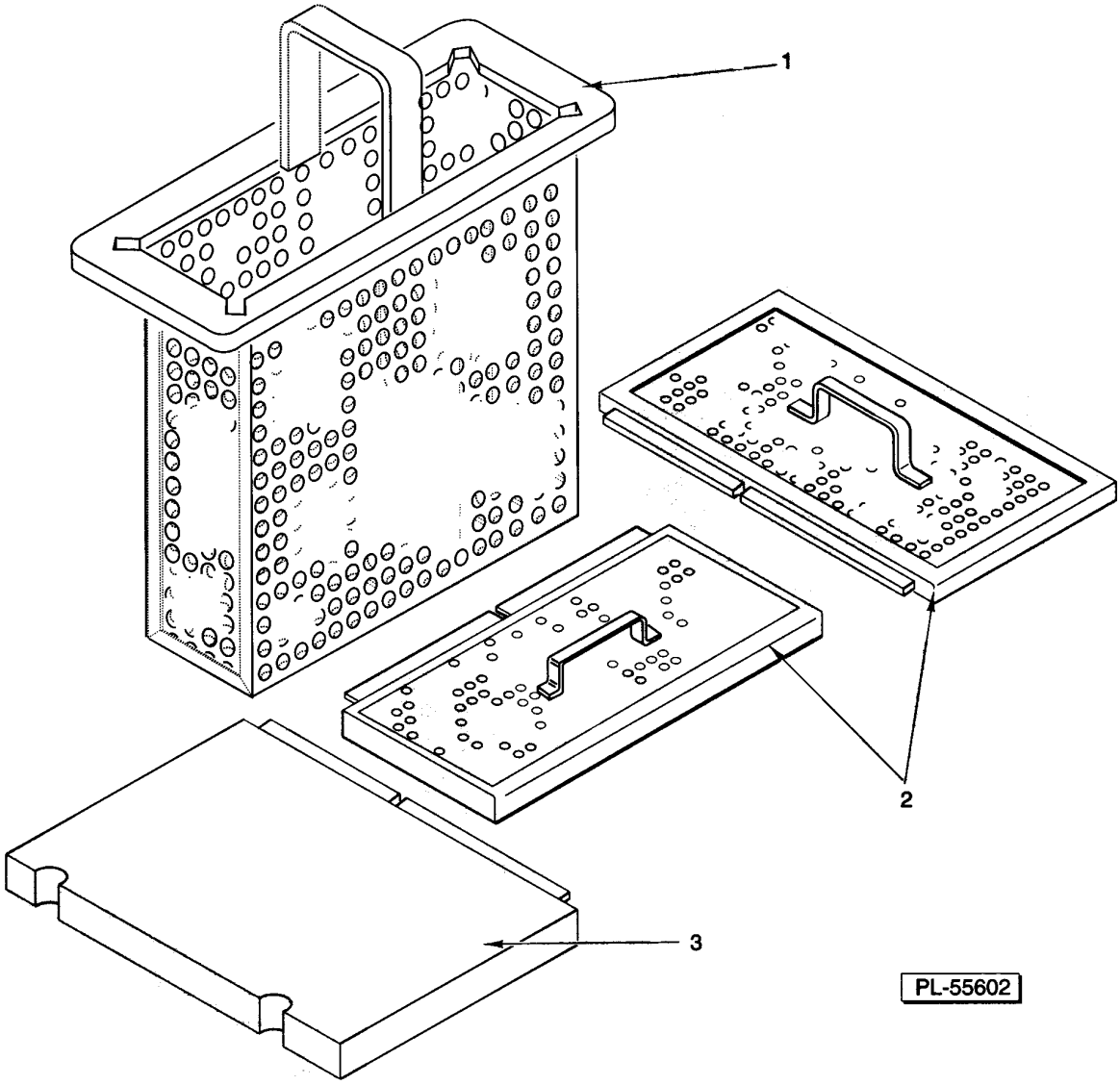

BUCKET AND STRAINER PANS

BUCKET AND STRAINER PANS

BUCKET AND STRAINER PANS

ILLUS. PL-55602	PART NO.	NAME OF PART	AMT.
1	00-271878	Bucket - Strainer	1
2	00-271880	Strainer	2
3	00-274143	Cover - Overflow	1

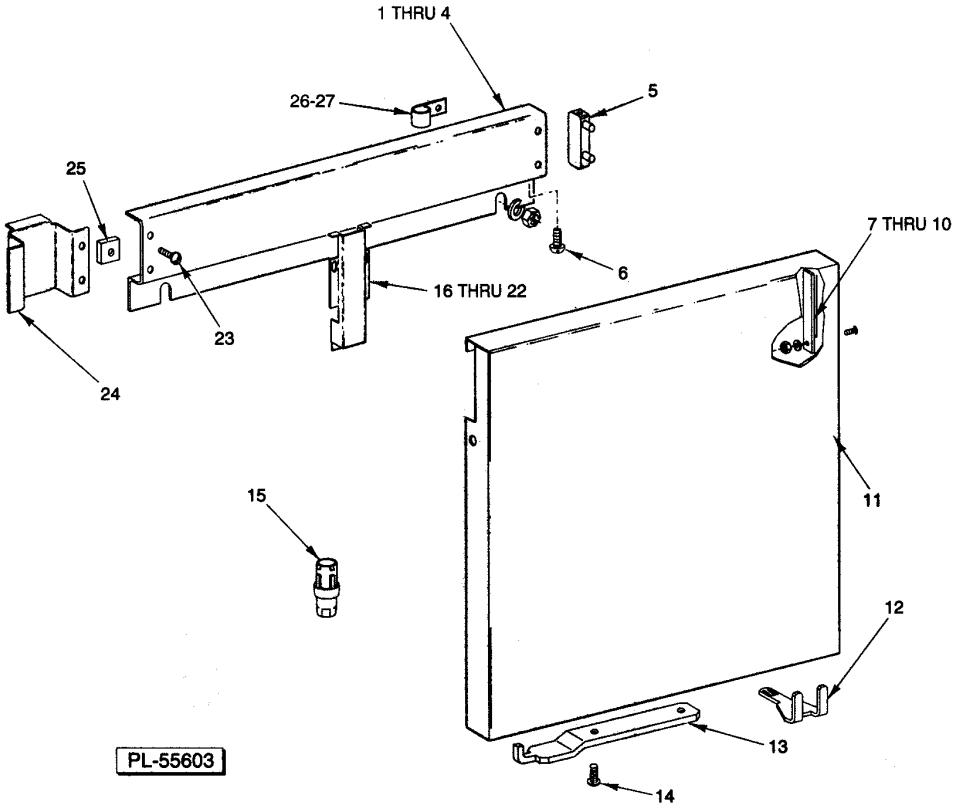

MISCELLANEOUS

MISCELLANEOUS

MISCELLANEOUS

ILLUS. PL-55603	PART NO.	NAME OF PART	AMT.
1	00-274123-00001	Wireway - Horizontal (Front R-L) or (Rear L-R, Previous Construction)	1
2	00-274123-00002	Wireway - Horizontal (Front L-R) or (Rear R-L, Previous Construction)	1
3	WS-017-06	Washer (SST)	AR
4	NS-015-01	Nut 1/4-20 Hex (SST)	AR
5	00-271057	NLA - Obsolete--Cap - Wireway	AR
6	SD-007-38	Self-Tapping Screw 8 x 1/4 Phil. Bind Hd., Type B	AR
7	00-436888	Cover - Panel Notch	AR
8	WS-019-06	Washer (SST)	AR
9	NS-031-16	Stop Nut 10-24 Hex (SST)	AR
10	SC-053-05	Mach. Screw 10-24 x 3/8 Slotted Truss Hd. (SST)	AR
11	00-436831-00001	Panel - Front Trim	1
12	00-271061	Support	1
13	00-289771	Retainer - Panel	1
14	SC-066-06	Mach. Screw 10-24 x 1/2 Truss Hd. (SST)	2
15	00-288946-00002	Foot - Adjustable (11/2 to 23/4)	2
16	00-271055	Wireway - Vertical	AR
17	SC-021-22	Mach. Screw 10-24 x 3/8 Slotted Rd. Hd. (SST)	AR
18	WL-006-07	Lockwasher #10 Helical (SST)	AR
19	WS-017-06	Washer (SST)	AR
20	WL-006-17	Lockwasher 1/4 Helical (SST)	AR
21	NS-015-01	Nut 1/4-20 Hex (SST)	AR
22	WS-019-19	Washer (SST)	AR
23	SC-021-03	Mach. Screw 4-40 x 3/8 Slotted Rd. Hd. (SST)	2
24	00-274252	Raceway - Wire	1
25	00-072937	Speed Nut 4-40	2
26	00-294677-00003	Clamp - Wire (3/4 I.D.)	2
27	NS-047-94	Lock Nut 3/16 Stud Special	2

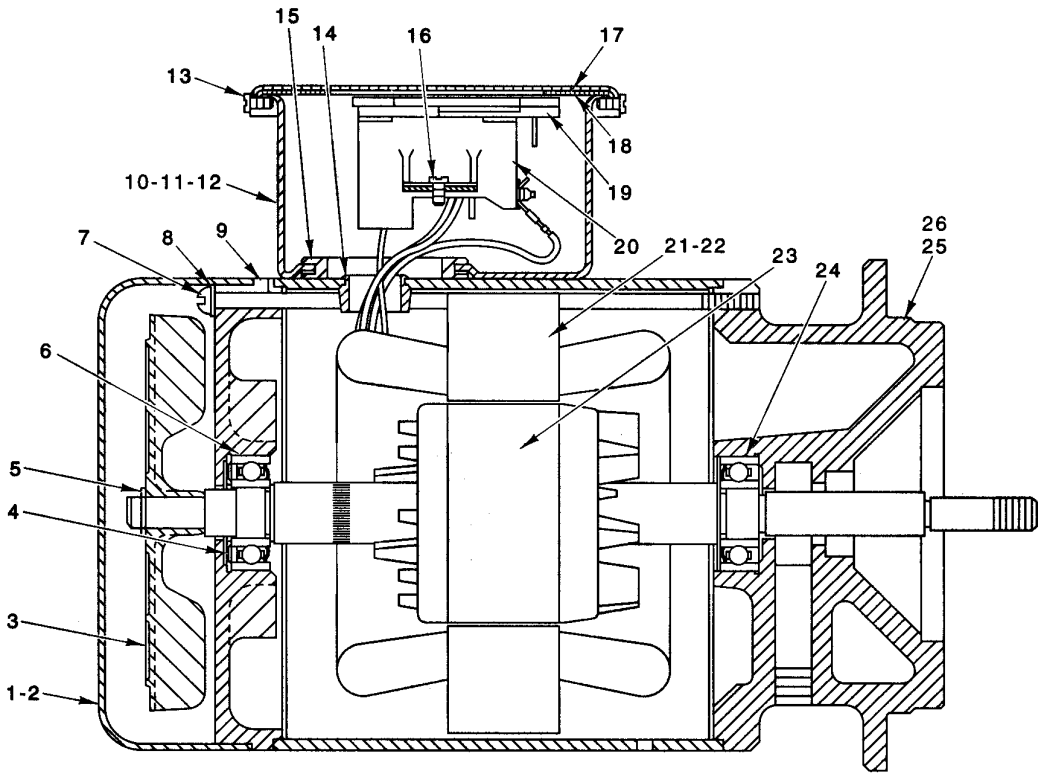

PUMP MOTOR PARTS
(RS-22 ON CURVE)

PUMP MOTOR PARTS
(RS-22 ON CURVE)

PUMP MOTOR PARTS
(RS-22 ON CURVE)

ILLUS. PL-55669	PART NO.	NAME OF PART	AMT.
1	00-077067	Cover - Motor End	1
2	SC-009-65	Mach. Screw 8-32 x 1/4 Rd. Hd	2
3	00-111493-00001	Fan - Ventilating	1
4	SL-002-04	Loading Spring - N.D. #S-17	1
5	RR-004-17	Retaining Ring	1
6	BB-020-18	Ball Bearing - N.D. 77503	1
7	SC-081-76	Mach. Screw 10-24 x 7 Rd. Hd	4
8	WL-008-13	Lockwasher #10 Internal Shakeproof	4
9	00-114379-00002	Bracket - Bearing (Fan End)	1
10	00-113403	Box - Terminal	1
11	SD-015-27	Self-Tapping Screw 10-24 x 5/16 Pan Hd. Taptite	2
12	WL-007-12	Lockwasher #10 External Shakeproof	2
13	SD-012-45	Self-Tapping Screw 8-32 x 5/16 Slotted Pan Hd., Type T	2
14	00-079118	Bushing - Snap (Field Ring)	1
15	00-060395	Grommet	1
16	SD-012-45	Self-Tapping Screw 8-32 x 5/16 Slotted Pan Hd., Type T	2
17	00-113405	Cover - Terminal Box	1
18	00-114811	Gasket - Terminal Box Cover	1
19	00-113417	Connector Block Assy	1
20	00-113552	Terminal Block Base Assy	1
21	00-065478-110-1	Stator Assy. (230/460 V., 60 Hz.)	1
22	00-065478-112-1	Stator Assy. (220/380 V., 50 Hz.)	1
23	00-015747-00288	Rotor Assy	1
24	BB-020-18	Ball Bearing - N.D. 77503	1
25	00-118969-00001	Bracket - Bearing (Pump End) (60 Hz.)	1
26	00-118969-00002	Bracket - Bearing (Pump End) (50 Hz.)	1

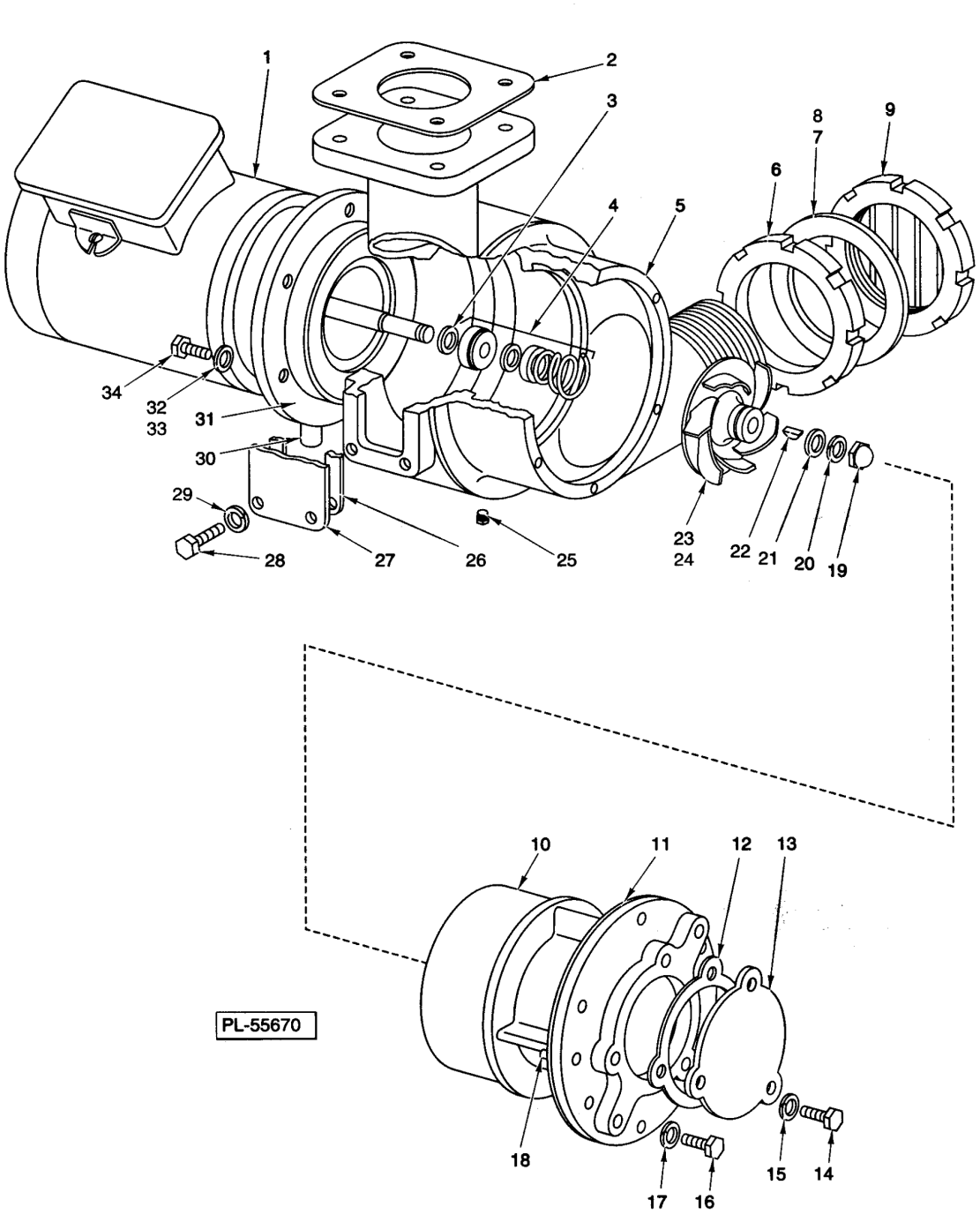

MOTOR AND PUMP (H-6-F)
(RS-22 ON CURVE)

MOTOR AND PUMP
(H-6-F)
(RS-22 ON CURVE)

MOTOR AND PUMP
(H-6-F)
(RS-22 ON CURVE)

ILLUS. PL-55670	PART NO.	NAME OF PART	AMT.
1	ML-018491	Motor Unit (Give Electrical Spec.)	1
2	00-009934-00001	Gasket - Pump Outlet	1
3	00-067500-00007	O-Ring	1
4	00-104329	Shaft Seal Assy	1
5	00-077726	Shell - Pump	1
6	00-009925	Lock Nut - Inlet	AR
7	WS-016-18	Washer (SST)	2
8	00-508458	Sealer (1/4 Rd.)	AR
9	00-087954	Pump Intake Screen Assy	1
10	00-077727	Plate - Face	1
*11	00-080432	Face Plate Gasket Kit	AR
12	00-022465	Gasket - Face Plate Cover	1
13	00-112558	Cover - Face Plate	1
14	SC-041-10	Cap Screw 5/16-18 x 5/8 Hex Hd. (SST)	3
15	WL-003-43	Lockwasher 5/16 Light	3
16	SC-041-12	Cap Screw 5/16-18 x 7/8 Hex Hd. (SST)	6
17	WL-003-43	Lockwasher 5/16 Light	6
18	00-011800-00037	Dowel	1
19	NS-024-06	Crown Nut 7/16-20	1
20	WL-006-32	Lockwasher 7/16 Light (SST)	1
21	WS-021-01	Washer (SST)	1
22	KW-003-03	Key #404 Woodruff	1
23	00-074299	Impeller (3450 RPM) (60 Hz.)	1
24	00-074542	Impeller (2850 RPM) (50 Hz.)	1
25	FP-052-20	Pipe Plug 1/8 Sq. Hd	1
26	00-012137	Gasket	1
27	00-112478	Cover - Hand Hole	1
28	SC-041-10	Cap Screw 5/16-18 x 5/8 Hex Hd. (SST)	4
29	WL-003-43	Lockwasher 5/16 Light	4
30	FP-064-15	Pipe 3/8 x 2 1/4 Lg. (S.T.O.E.)	1
31	00-104032	Gasket	1
32	WS-017-08	Washer (0.328 x 0.625 x 0.062) (SST)	6
33	00-508454	Sealer (1/8 Rd.)	AR
34	SC-041-12	Cap Screw 5/16-18 x 7/8 Hex Hd. (SST)	6
	00-080431-00001	NLA - Obsolete--H-6-F Pump Assy. (60 Hz.)	1
	00-080431-00002	H-6-F Pump Assy. (50 Hz.) (Incls. Items 2 thru 7, 10 thru 22, 24 thru 29, 31, 32, & 34)	1
	00-112417-00003	Motor & Impeller Assy. (60 Hz., 1 Ph.) (Incls. Items 1, 3, 4, 19, 20, 21, 22, 23, 30, & 31)	1
	00-112417-00004	Motor & Impeller Assy. (60 Hz., 3 Ph.) (Incls. Items 1, 3, 4, 19, 20, 21, 22, 23, 30, & 31)	1
	00-112417-00005	Motor & Impeller Assy. (50 Hz., 1 Ph.) (Incls. Items 1, 3, 4, 19, 20, 21, 22, & 24)	1
	00-112417-00006	Motor & Impeller Assy. (50 Hz., 3 Ph.) (Incls. Items 1, 3, 4, 19, 20, 21, 22, & 24)	1

* (1 Set Consists of: 1 Blue [0.055 Thk.], 1 Brown [0.010 Thk.], and 1 Yellow [0.020 Thk.]) -- Select gasket to obtain 0.008? to 0.010? clearance between face plate and impeller. -- (1 Set Consists of: 1 Blue [0.055 Thk.], 1 Brown [0.010 Thk.], and 1 Yellow [0.020 Thk.])

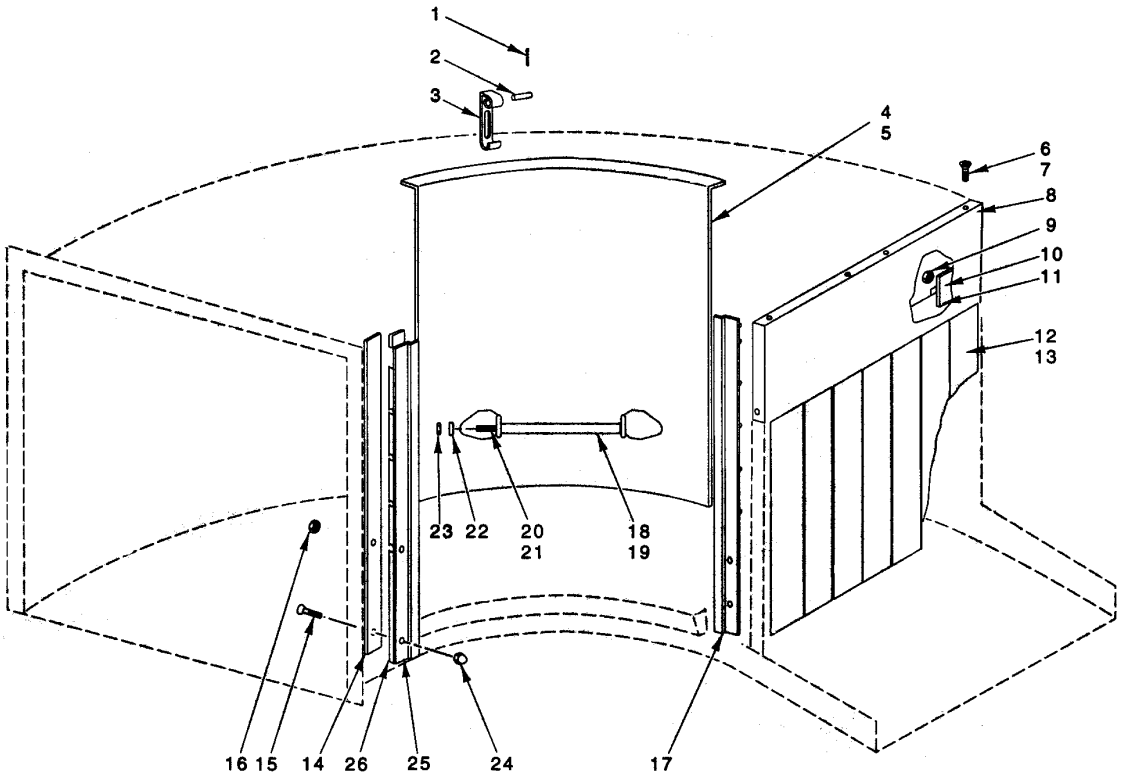

PL-55572

INSIDE DOOR UNIT (PREWASH)
(RS-22 ON CURVE)

INSIDE DOOR UNIT
(PREWASH)
(RS-22 ON CURVE)

INSIDE DOOR UNIT
(PREWASH)
(RS-22 ON CURVE)

ILLUS. PL-55572	PART NO.	NAME OF PART	AMT.
1	PC-005-02	Cotter Pin 1/16 x 1/2	AR
2	00-012114	Pin	AR
3	00-290164	Latch - Door	AR
4	00-112394-00001	Inside Door Assy. (120 Deg. Chamber)	1
5	00-112396-00001	Inside Door Assy. (90 Deg. Chamber)	1
6	SC-053-02	Mach. Screw 10-24 x 1/2 Slotted Truss Hd. (SST)	8
7	NS-031-15	Stop Nut 10-24 (Elastic) (SST)	8
8	00-121222	Panel Chamber End	1
9	NS-031-15	Stop Nut 10-24 (Elastic)	2
10	SC-053-02	Mach. Screw 10-24 x 1/2 Slotted Truss Hd. (SST)	2
11	00-101357	Hook - Curtain	2
12	00-120265-00001	Curtain - Splash (18-N-7)	1
13	00-120266-00005	Rod - Curtain	1
14	00-526408	Tape - Foam	AR
15	SC-022-18	Mach. Screw 10-24 x 7/16 Slotted Flat Hd. (SST)	4
16	NS-031-16	Stop Nut 10-24 (Elastic) (SST)	12
17	00-112392-00001	Door Guide Assy. (RH)	1
18	00-022413-00002	Handle - Door (120 Deg. Chamber)	1
19	00-022413-00003	Handle - Door (90 Deg. Chamber)	1
20	00-063486	Stud - Door Handle (120 Deg. Chamber)	1
21	00-104044	Stud - Door Handle (90 Deg. Chamber)	1
22	WL-008-17	Lockwasher 1/4 Internal Shakeproof	2
23	NS-025-04	Acorn Nut 1/4-20 (SST)	2
24	NS-025-01	Acorn Nut 10-24 (SST)	4
25	00-112393-00001	Door Guide Assy. (LH)	1
26	00-112378-00015	Slide - Door	2
	00-120152-00037	Splash Curtain Assy. (Incls. Items 12 & 13)	1

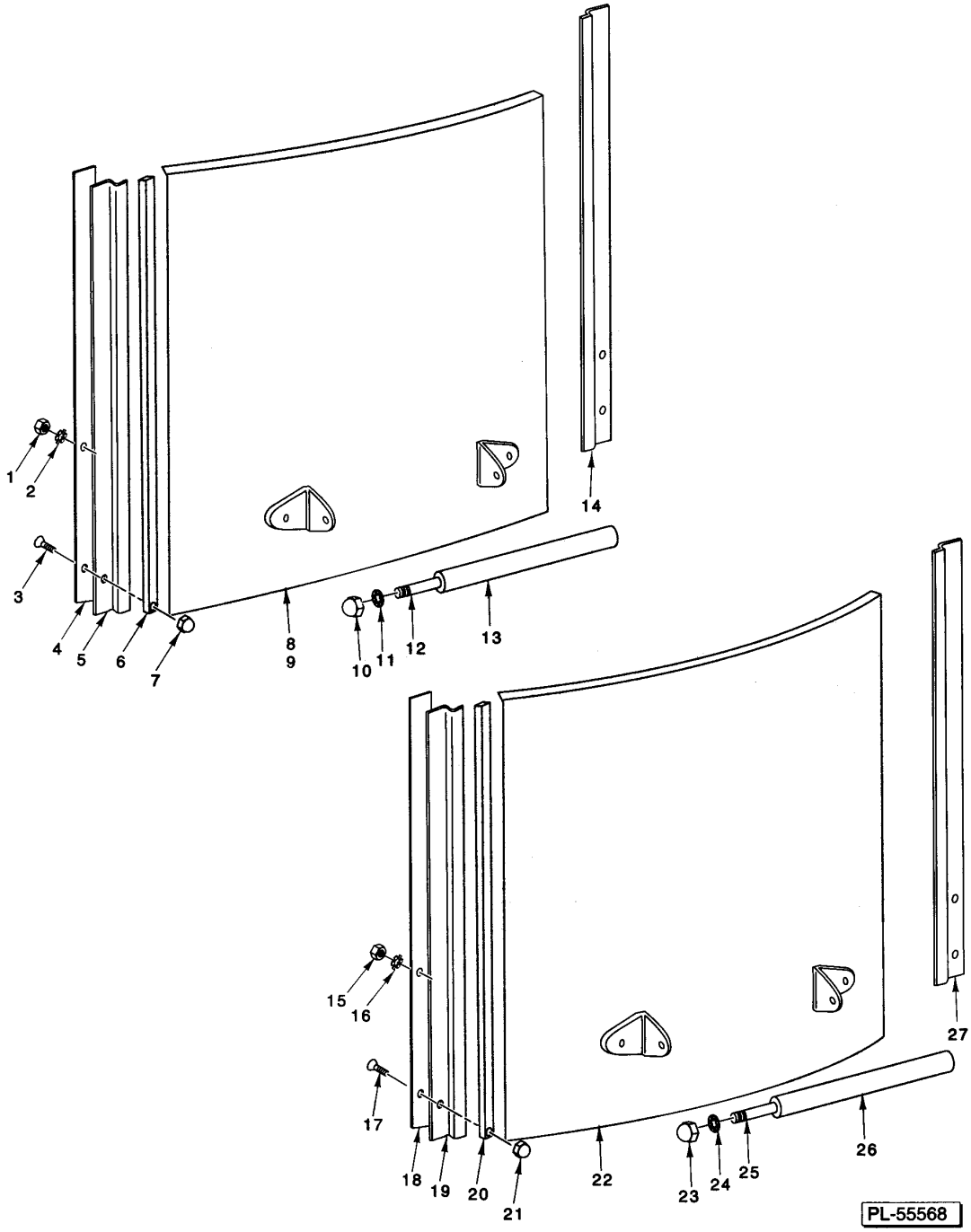

OUTSIDE DOOR UNIT (PREWASH)
(RS-22 ON CURVE)

OUTSIDE DOOR UNIT (PREWASH) (RS-22 ON CURVE)

OUTSIDE DOOR UNIT
(PREWASH)
(RS-22 ON CURVE)

ILLUS. PL-55568	PART NO.	NAME OF PART	AMT.
1	NS-031-16	Stop Nut 10-24 (Elastic) (SST)	12
2	WL-014-07	Lockwasher #10 External Shakeproof (SST)	12
3	SC-022-18	Mach. Screw 10-24 x 7/16 Slotted Flat Hd. (SST)	4
4	00-526408	Tape - Foam	AR
5	00-112393-00001	Door Guide Assy. (LH)	1
6	00-112378-00015	Slide - Door	2
7	NS-025-01	Acorn Nut 10-24 (SST)	4
8	00-101344-00001	Outside Door Assy. (Radius & Flat) (CW Operation)	1
9	00-101345-00001	Outside Door Assy. (Radius & Flat) (CCW Operation)	1
10	NS-025-04	Acorn Nut 1/4-20 (SST)	2
11	WL-008-17	Lockwasher 1/4 Internal	2
12	00-063486	Stud - Door Handle	1
13	00-022413-00002	Handle - Door	1
14	00-112392-00001	Door Guide Assy. (RH)	1
15	NS-031-16	Stop Nut 10-24 (Elastic) (SST)	12
16	WL-014-07	Lockwasher #10 External Shakeproof (SST)	12
17	SC-022-18	Mach. Screw 10-24 x 7/16 Slotted Flat Hd. (SST)	4
18	00-526408	Tape - Foam	AR
19	00-112393-00001	Door Guide Assy. (LH)	1
20	00-112378-00015	Slide - Door	2
21	NS-025-01	Acorn Nut 10-24 (SST)	4
22	00-101343-00001	Outside Door Assy. (Full Radius)	1
23	NS-025-04	Acorn Nut 1/4-20 (SST)	2
24	WL-008-17	Lockwasher 1/4 Internal	2
25	00-063486	Stud - Door Handle	1
26	00-022413-00002	Handle - Door	1
27	00-112392-00001	Door Guide Assy. (RH)	1

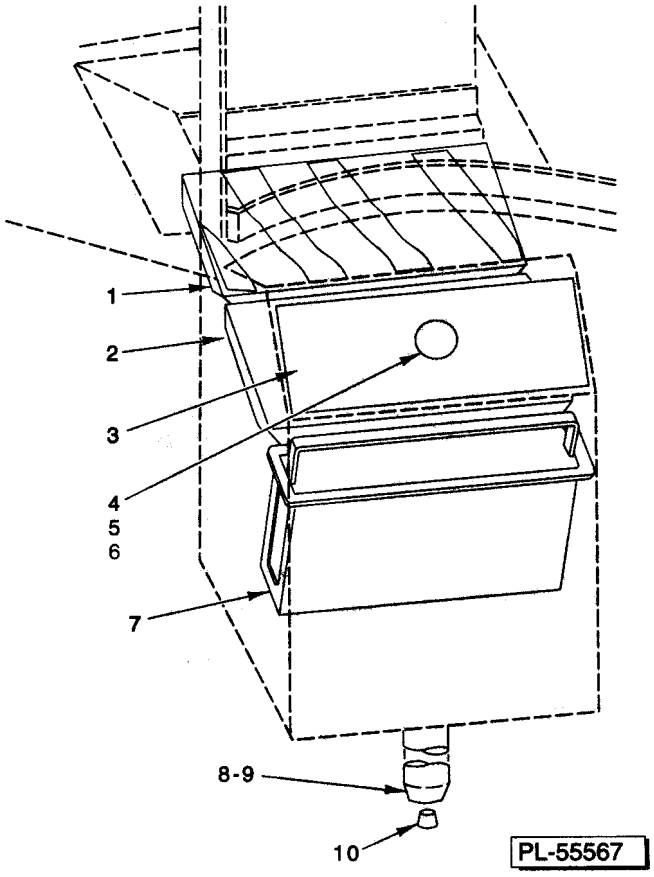

STRAINER PANS
(RS-22 ON CURVE)

STRAINER PANS
(RS-22 ON CURVE)

STRAINER PANS
(RS-22 ON CURVE)

ILLUS. PL-55567	PART NO.	NAME OF PART	AMT.
1	00-287146	Pan - Deflector	1
2	00-101280-00002	Pan - Strainer	1
3	00-079517	Strainer Pan Chute Cover Assy	1
4	00-060468	Knob - Drain Handle	1
5	SC-041-26	Cap Screw 3/8-16 x 1/2 Hex Hd. (SST)	1
6	WL-006-27	Lockwasher 3/8 Light (SST)	1
7	00-101341	Strainer Bucket Assy	1
8	00-288655-00001	Foot (15/8 Dia.) (STL)	2
9	00-288655-00002	Foot (15/8 Dia.) (SST)	2
10	00-071710	Plug - Foot (Use with Items 9 & 10)	2
	00-079437	Strainer Pan Chute Cover Assy. (Incls. Items 3 thru 6)	1

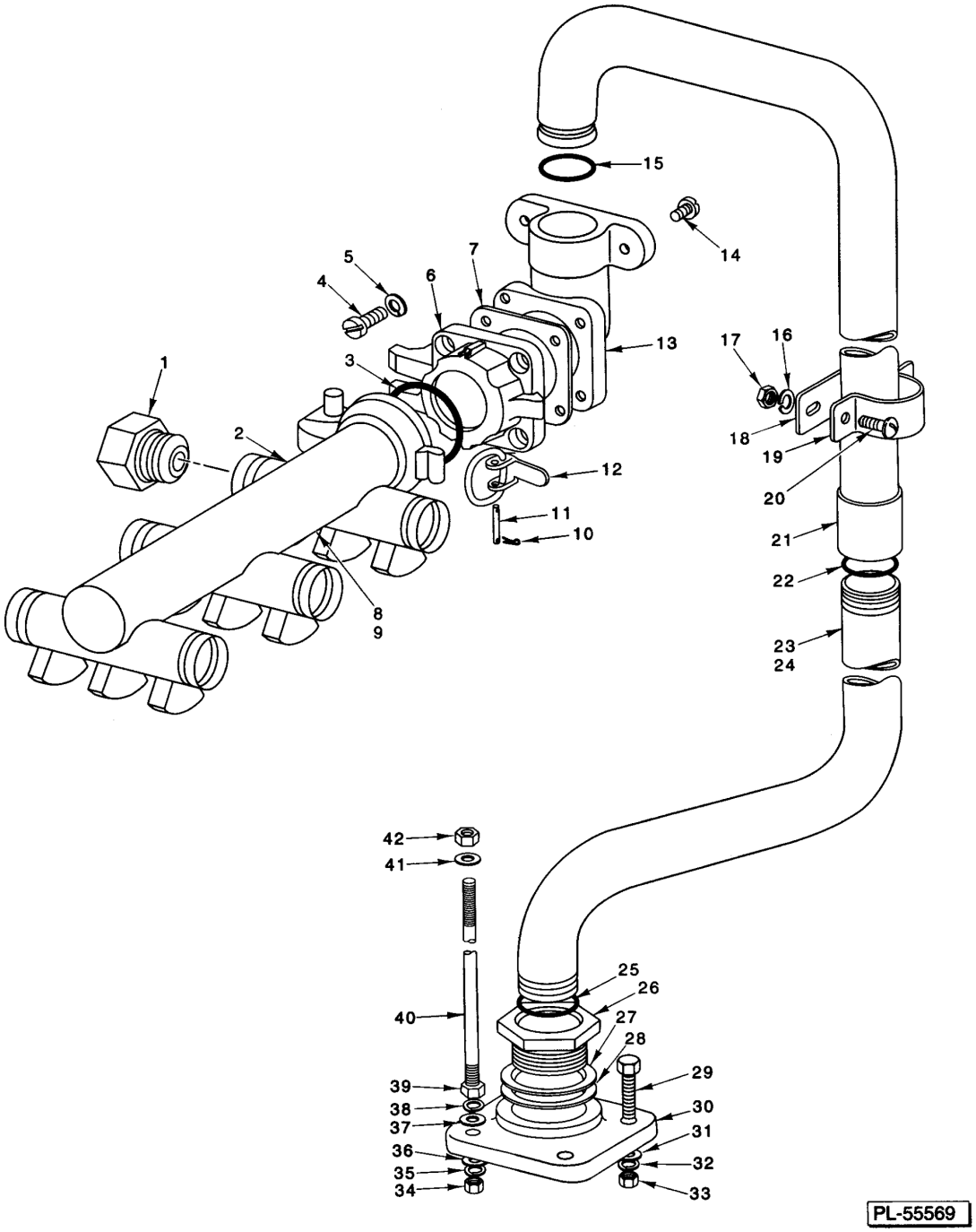

WASH PIPING
(RS-22 ON CURVE)

WASH PIPING
(RS-22 ON CURVE)

WASH PIPING
(RS-22 ON CURVE)

ILLUS. PL-55569	PART NO.	NAME OF PART	AMT.
1	00-293858	End Cap - Hex	6
2	00-107965	Arm - Upper Prewash Sub-Assy. (Incls. Items 8 & 9)	1
3	00-067500-00119	O-Ring	1
4	SC-024-22	Mach. Screw 3/8-16 x 7/8 Slotted Fil. Hd. (SST)	4
5	WL-006-29	Lockwasher 3/8 High Collar (SST)	4
6	00-083073	Hinge - Upper Discharge	1
7	00-107477	Gasket - Discharge Hinge	1
8	00-061521	Baffle - Wash Arm	2
9	SC-069-06	Mach. Screw 1/4-20 x 3/8 Slotted Rd. Hd. (Nylok) (SST)	2
10	PC-005-25	Cotter Pin 1/32 x 1/2 (SST)	2
11	00-083076	Pin - Bracket	1
12	00-276030	Clamp - Lever Bracket Assy.	1
13	00-104175	Ell - Upper Wash	1
14	SC-053-16	Mach. Screw 5/16-18 x 5/8 Slotted Truss Hd. (SST)	2
15	00-067500-00013	O-Ring	1
16	WL-006-22	Lockwasher 5/16 Light (SST)	2
17	NS-015-11	Nut 5/16-18 (SST)	2
18	00-101973	Spacer - Wash Pipe	2
19	00-101974	Clamp - Wash Pipe	1
20	SC-053-18	Mach. Screw 5/16-18 x 7/8 Slotted Truss Hd. (SST)	2
21	00-101540-00001	Tube - Upper Prewash	1
22	00-067500-00013	O-Ring	2
23	00-103269-00001	Tube - Lower Prewash (CCW, Inside Access to Sump; Outside Access to Sump)	1
24	00-103269-00002	Tube - Lower Prewash (CCW, Outside Access to Sump; Inside Access to Sump)	1
25	00-067500-00013	O-Ring	2
26	00-082645	Discharge - Pump	1
27	00-021104	Washer (SST)	1
28	00-021105	Washer	1
29	SC-041-34	Cap Screw 3/8-16 x 2 Hex Hd. (SST)	3
30	00-103262	Flange - Pump	1
31	WS-006-44	Washer (SST)	3
32	WL-006-27	Lockwasher 3/8 Light (SST)	3
33	NS-015-13	Nut 3/8-16 (SST)	3
34	NS-015-13	Nut 3/8-16 (SST)	1
35	WL-006-27	Lockwasher 3/8 Light (SST)	1
36	WS-006-44	Washer (SST)	1
37	WS-006-44	Washer (SST)	1
38	WL-006-27	Lockwasher 3/8 Light (SST)	1
39	NS-015-13	Nut 3/8-16 (SST)	1
40	00-103030	Rod - Pump Support	1
41	WS-006-44	Washer (SST)	1
42	NS-015-13	Nut 3/8-16 (SST)	1
	00-107964	Upper Prewash Arm Assy. (Incls. Items 1, 2, & 3)	1

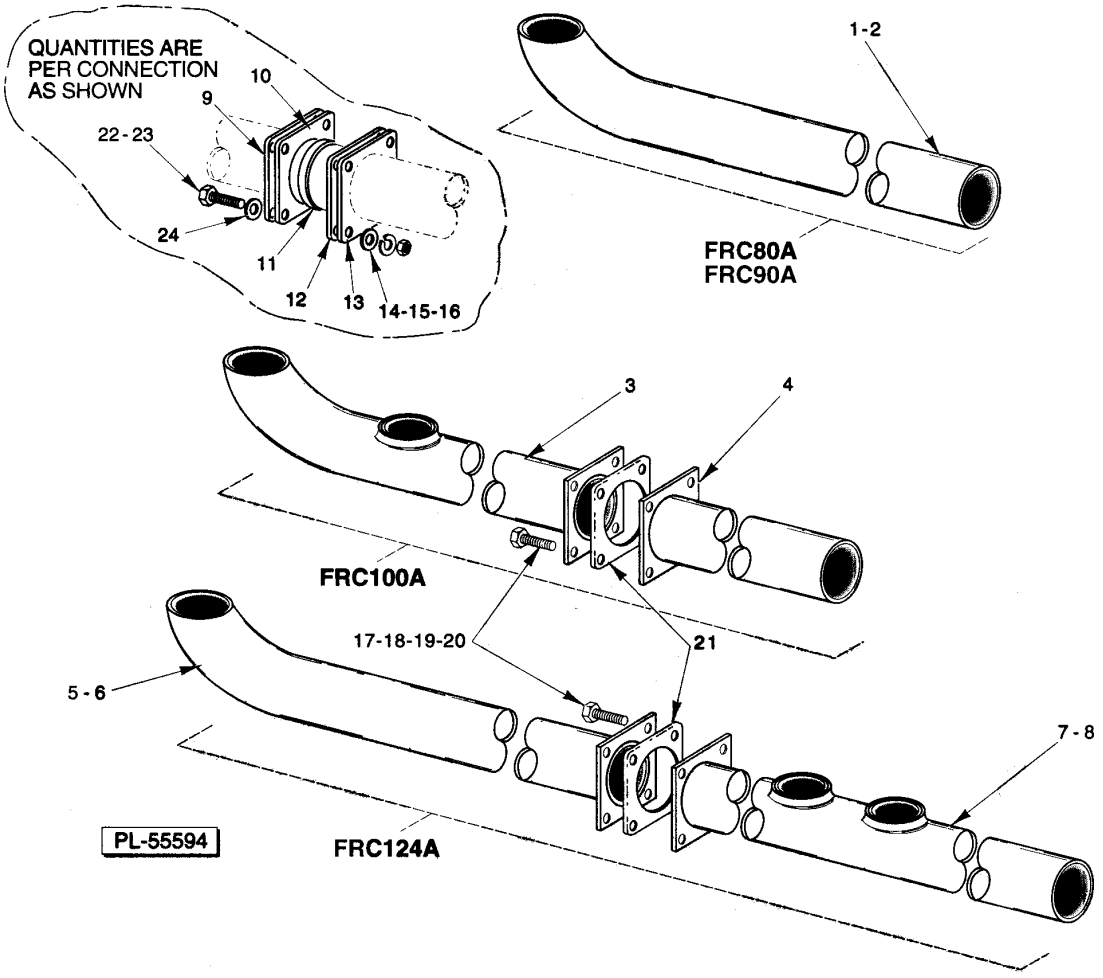

FLOW BACK TUBE

FLOW BACK TUBE

FLOW BACK TUBE

ILLUS. PL-55594	PART NO.	NAME OF PART	AMT.
1	00-274113-00003	Flow Back Tube (R-L) (FRC80A & FRC90A)	1
2	00-274113-00004	Flow Back Tube (L-R) (FRC80A & FRC90A)	1
3	00-436708	Flow Back Tube - Inside (FRC100A)	1
4	00-436710-00002	Flow Back Tube - Outside (FRC100A)	1
5	00-329664	Flow Back Tube - Outside (R-L) (FRC124A)	1
6	00-289502	Flow Back Tube - Outside (L-R) (FRC124A)	1
7	00-329658-00001	Flow Back Tube - Inside (R-L) (FRC124A)	1
8	00-329659-00001	Flow Back Tube - Inside (L-R) (FRC124A)	1
9	00-120115	Retainer - Seal	1
10	00-120603	Gasket - Seal Retainer	1
11	00-077621-00002	Ring - Sealing	1
12	00-120603	Gasket - Seal Retainer	1
13	00-120115	Retainer - Seal	1
14	WS-017-08	Washer (0.328 x 0.625 x 0.062) (SST)	4
15	WL-006-23	Lockwasher 5/16 Helical (SST)	4
16	NS-015-11	Nut 5/16-18 Hex (SST)	4
17	SC-041-15	Cap Screw 5/16-18 x 11/4 Hex Hd	4
18	WS-017-08	Washer (0.328 x 0.625 x 0.062) (SST)	8
19	WL-006-23	Lockwasher 5/16 Helical (SST)	4
20	NS-015-11	Nut 5/16-18 Hex (SST)	4
21	00-120603	Gasket - Seal Retainer	2
22	SC-041-15	Cap Screw 5/16-18 x 11/4 Hex Hd	4
23	00-545595	Sealer (1/8 Rd.)	AR
24	WS-017-08	Washer (0.328 x 0.625 x 0.062) (SST)	4

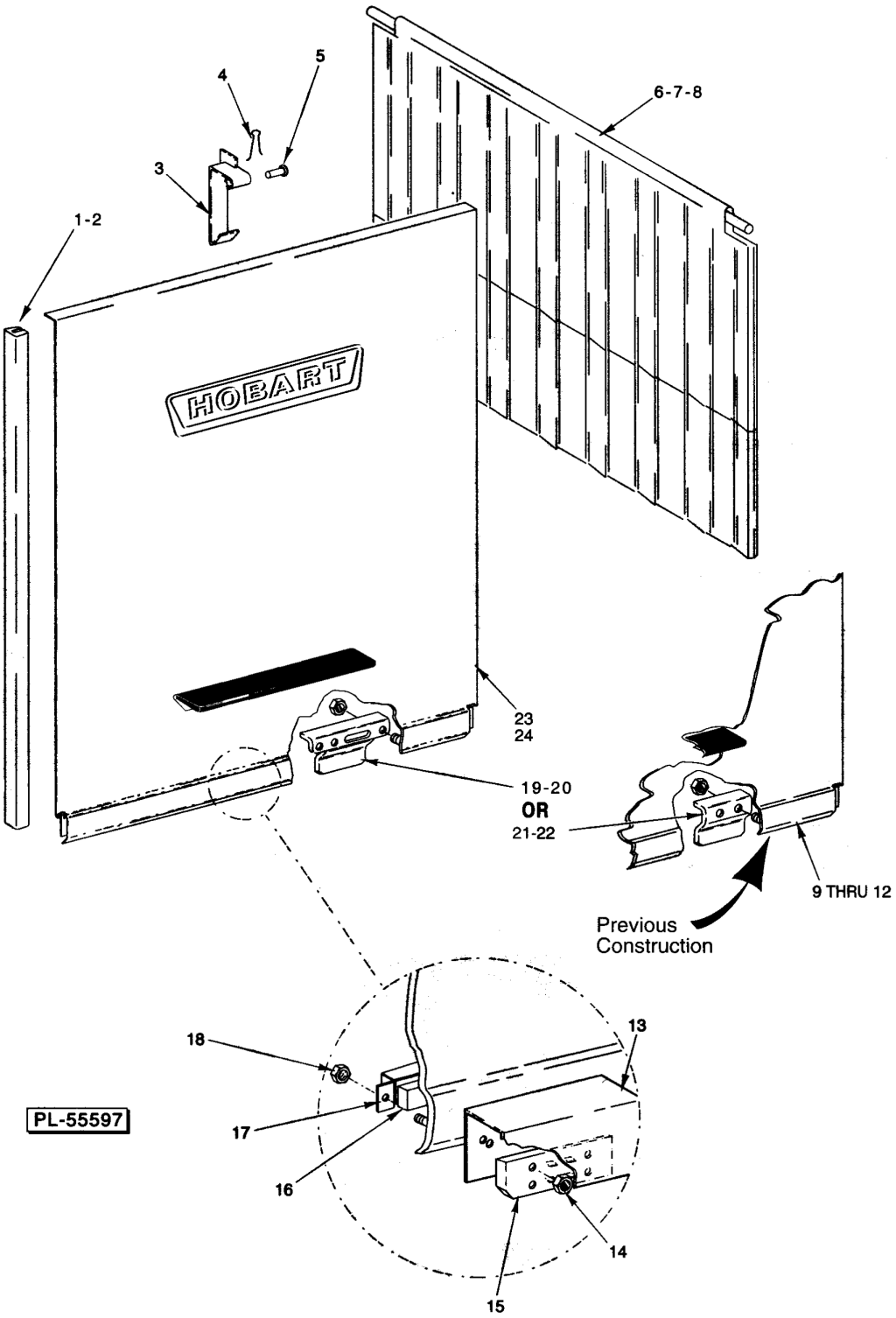

DOOR AND CURTAIN

DOOR AND CURTAIN

DOOR AND CURTAIN

ILLUS. PL-55597	PART NO.	NAME OF PART	AMT.
1	00-112378-00049	Door Slide (26-1/8 Door Height)	2
2	00-112378-00050	Door Slide (32-1/8 Door Height)	2
3	00-185864	Catch - Door	1
4	PC-005-02	Cotter Pin 1/16 x 1/2 (SST)	1
5	00-012114	Pin	1
6	00-271084	Splash Curtain (261/8 Door Height)	1
7	00-271084-00002	Splash Curtain (32-1/8 Door Height)	1
8	00-120266-00001	Curtain Rod	1
*9		Door (261/8) (L-R)	1
*10		Door (261/8) (R-L)	1
*11		Door (321/8) (L-R)	1
*12		Door (321/8) (R-L)	1
13	00-270996	Insulator - Switch	1
14	NS-031-50	Stop Nut 6-32 Hex (SST)	2
15	00-892896	Kit - Service Reed Switch	1
16	00-290160	Magnet	1
17	00-290159	Retainer - Magnet	1
18	NS-031-50	Stop Nut 6-32 Hex (SST)	2
19	00-328065	Actuator - Lift Drain	1
20	NS-031-21	Stop Nut 1/4-20 Hex (SST)	AR
21	00-274767	Actuator - Lift Drain	1
22	NS-031-21	Stop Nut 1/4-20 Hex (SST)	2
23	00-328064-00007	Door (261/8) (R-L & L-R)	1
24	00-328079-00007	Door (321/8) (R-L & L-R)	1

* No longer available. Order item 19 and 23 or 24 to convert to present style.

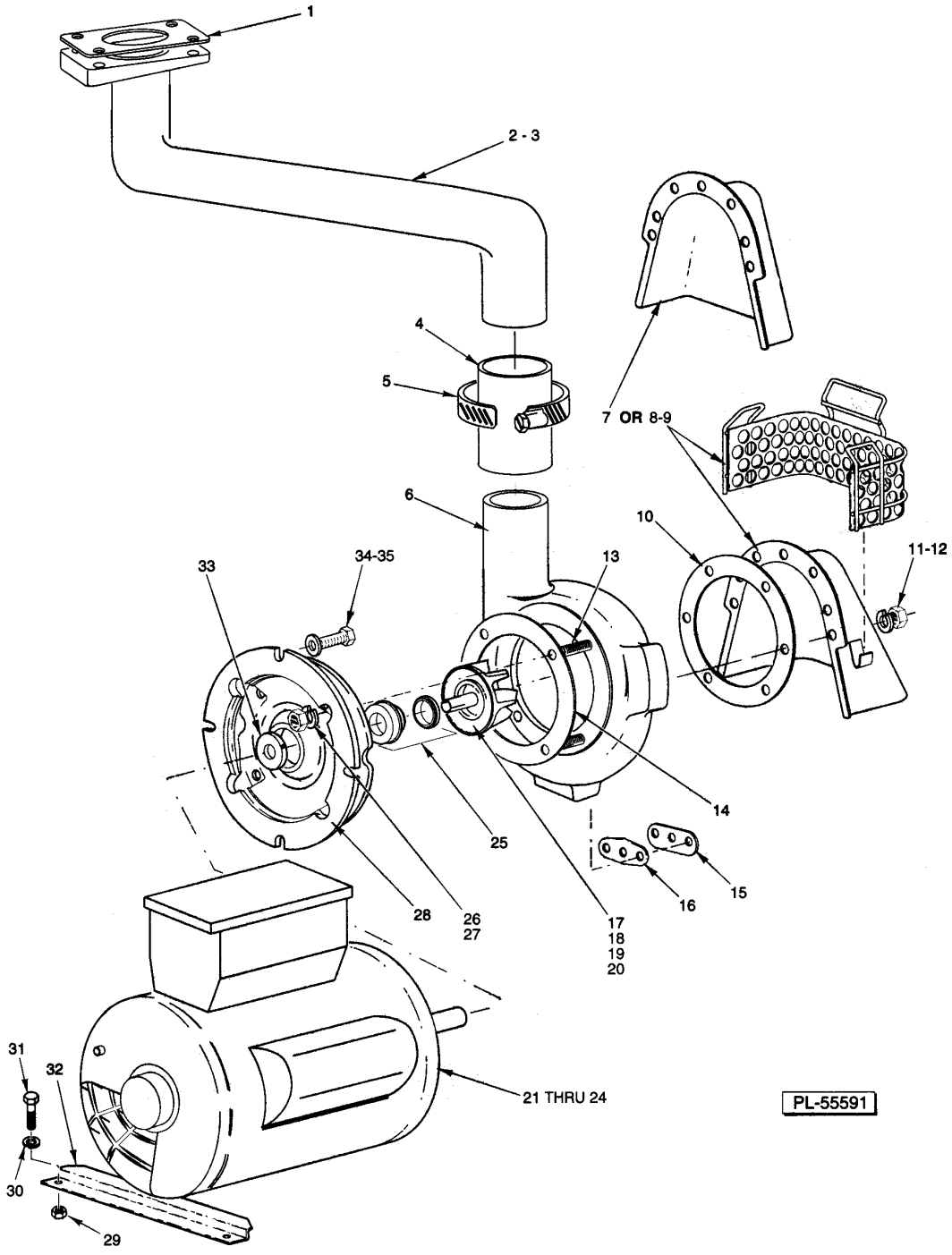

PREWASH MOTOR AND PUMP

PREWASH MOTOR AND PUMP

PREWASH MOTOR AND PUMP

ILLUS. PL-55591	PART NO.	NAME OF PART	AMT.
1	00-270968	Gasket - Wash Pipe	1
2	00-274063	Tube - Discharge (R-L)	1
3	00-274064	Tube - Discharge (L-R) (Not Shown)	1
4	00-749586	Hose - Discharge	1
5	00-542337	Clamp - Hose	2
6	00-274227-00001	Pump Shell (Incls. Item 7)	1
7	00-274223	Shroud	1
8	00-274246	Shroud	1
9	00-328362	Strainer - Pump	1
10	00-119050	Gasket - Pump Intake	1
11	WL-006-23	Lockwasher 5/16 Helical (SST)	10
12	NS-015-11	Nut 5/16-18 Hex (SST)	10
13	00-274227-00005	Stud	AR
14	00-274227-00004	Gasket	1
15	00-812776	Support Plate	2
16	00-119051	Gasket - Pump Drain Hole	2
17	00-274227-00008	Impeller & Sleeve (60 Hz.) (1 Hp.)	1
18	00-274227-00011	Impeller & Sleeve (50 Hz.) (1 Hp.)	1
19	00-274227-00009	Impeller & Sleeve (60 Hz.) (2 Hp.)	1
20	00-274227-00007	Impeller & Sleeve (50 Hz.) (2 Hp.)	1
21	00-274230-00006	Motor (3 Ph., 60 Hz.) (1 Hp.)	1
22	00-274230-00008	Motor (3 Ph., 50 Hz.) (1 Hp.)	1
23	00-274230-00002	Motor (3 Ph., 60 Hz.) (2 Hp.)	1
24	00-274230-00004	Motor (3 Ph., 50 Hz.) (2 Hp.)	1
25	00-274227-00006	Seal - Shaft	1
26	WL-006-22	Lockwasher 5/16 Light (SST)	4
27	NS-015-11	Nut 5/16-18 Hex (SST)	4
28	00-274227-00003	Adapter	1
29	NS-015-01	Nut 1/4-20 Hex (SST)	2
30	WL-006-17	Lockwasher 1/4 Helical (SST)	2
31	SC-041-05	Cap Screw 1/4-20 x 5/8 Hex Hd. (SST)	2
32	00-475216	Bracket - Motor Support	1
33	00-274227-00002	Clamp	1
34	SC-041-29	Cap Screw 3/8-16 x 7/8 Hex Hd. (Wax-Coated Threads) (SST)	4
35	WS-006-44	Washer (SST)	4

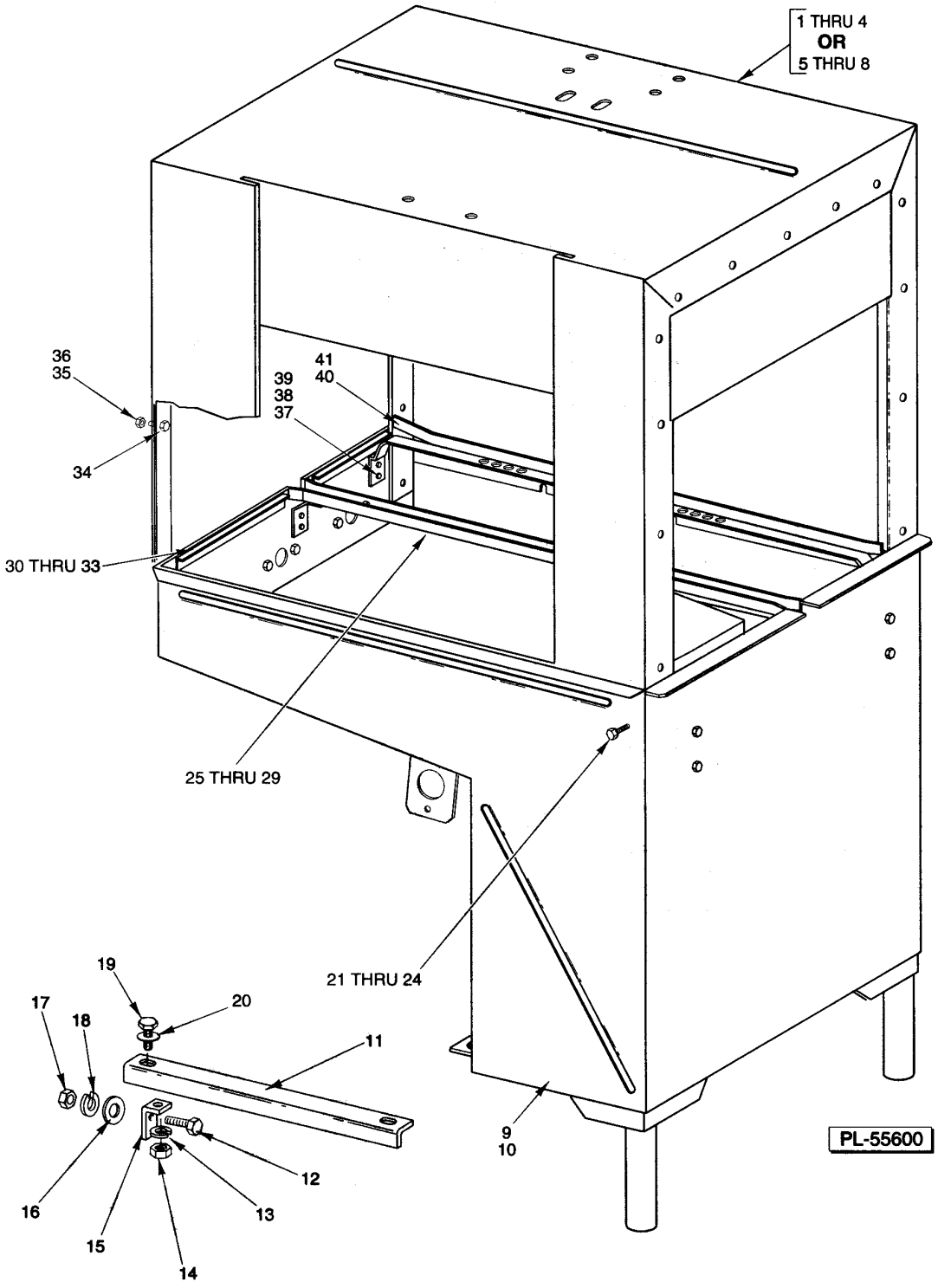

PREWASH CHAMBER AND TANK

PREWASH CHAMBER AND TANK

PREWASH CHAMBER AND TANK

ILLUS. PL-55600	PART NO.	NAME OF PART	AMT.
1	00-435779	Chamber Assy. W/Studs (261/8 Door Height) (R-L)	1
2	00-435781	Chamber Assy. W/Studs (26 1/8 Door Height) (L-R)	1
3	00-435780	Chamber Assy. W/Studs (32 1/8 Door Height) (R-L)	1
4	00-435782	Chamber Assy. W/Studs (32 1/8 Door Height) (L-R)	1
5	00-274214-00001	Chamber Assy. (26 1/8 Door Height) (R-L)	1
6	00-274213-00001	Chamber Assy. (26 1/8 Door Height) (L-R)	1
7	00-274704-00001	Chamber Assy. (32 1/8 Door Height) (R-L)	1
8	00-274703-00001	Chamber Assy. (32 1/8 Door Height) (L-R)	1
9	00-274469	Tank Assy. (R-L)	1
10	00-274468	Tank Assy. (L-R)	1
11	00-274092-00002	Strut - Tank-to-Tank	2
12	SC-041-11	Cap Screw 5/16-18 x 3/4 Hex Hd. (SST)	2
13	WL-006-23	Lockwasher 5/16 Helical (SST)	4
14	NS-015-11	Nut 5/16-18 Hex (SST)	4
15	00-274091	Bracket - Strut Support	2
16	WS-017-08	Washer (0.328 x 0.625 x 0.062) (SST)	2
17	NS-015-11	Nut 5/16-18 Hex (SST)	2
18	WL-006-23	Lockwasher 5/16 Helical (SST)	2
19	SC-041-11	Cap Screw 5/16-18 x 3/4 Hex Hd. (SST)	4
20	WS-017-01	Washer 0.328 x 0.875 x 0.062 (SST)	4
21	SC-041-11	Cap Screw 5/16-18 x 3/4 Hex Hd. (SST)	4
22	WL-006-23	Lockwasher 5/16 Helical (SST)	6
23	NS-015-11	Nut 5/16-18 Hex (SST)	6
24	WS-017-01	Washer 0.328 x 0.875 x 0.062 (SST)	6
25	00-274747-00001	Guide - Chain	1
26	SC-041-30	Cap Screw 3/8-16 x 1 Hex Hd. (SST)	2
27	WS-006-27	Washer	4
28	WL-006-27	Lockwasher 3/8 Light (SST)	2
29	NS-015-13	Nut 3/8 -16 Hex	2
30	00-435052	Support - Tank	2
31	SC-041-05	Cap Screw 1/4-20 x 5/8 Hex Hd. (SST)	4
32	WL-006-17	Lockwasher 1/4 Helical (SST)	4
33	NS-015-01	Nut 1/4-20 Hex (SST)	4
34	SC-041-05	Cap Screw 1/4-20 x 5/8 Hex Hd. (SST)	15
35	NS-015-01	Nut 1/4-20 Hex (SST)	15
36	WL-006-17	Lockwasher 1/4 Helical (SST)	15
37	SC-041-12	Cap Screw 5/16-8 x 7/8 Hex Hd. (SST)	4
38	WL-006-23	Lockwasher 5/16 Regular	4
39	NS-015-11	Nut 5/16-18 Hex (SST)	4
40	00-274737-00001	Track - Rack (LH)	1
41	00-274737-00002	Track - Rack (RH)	1

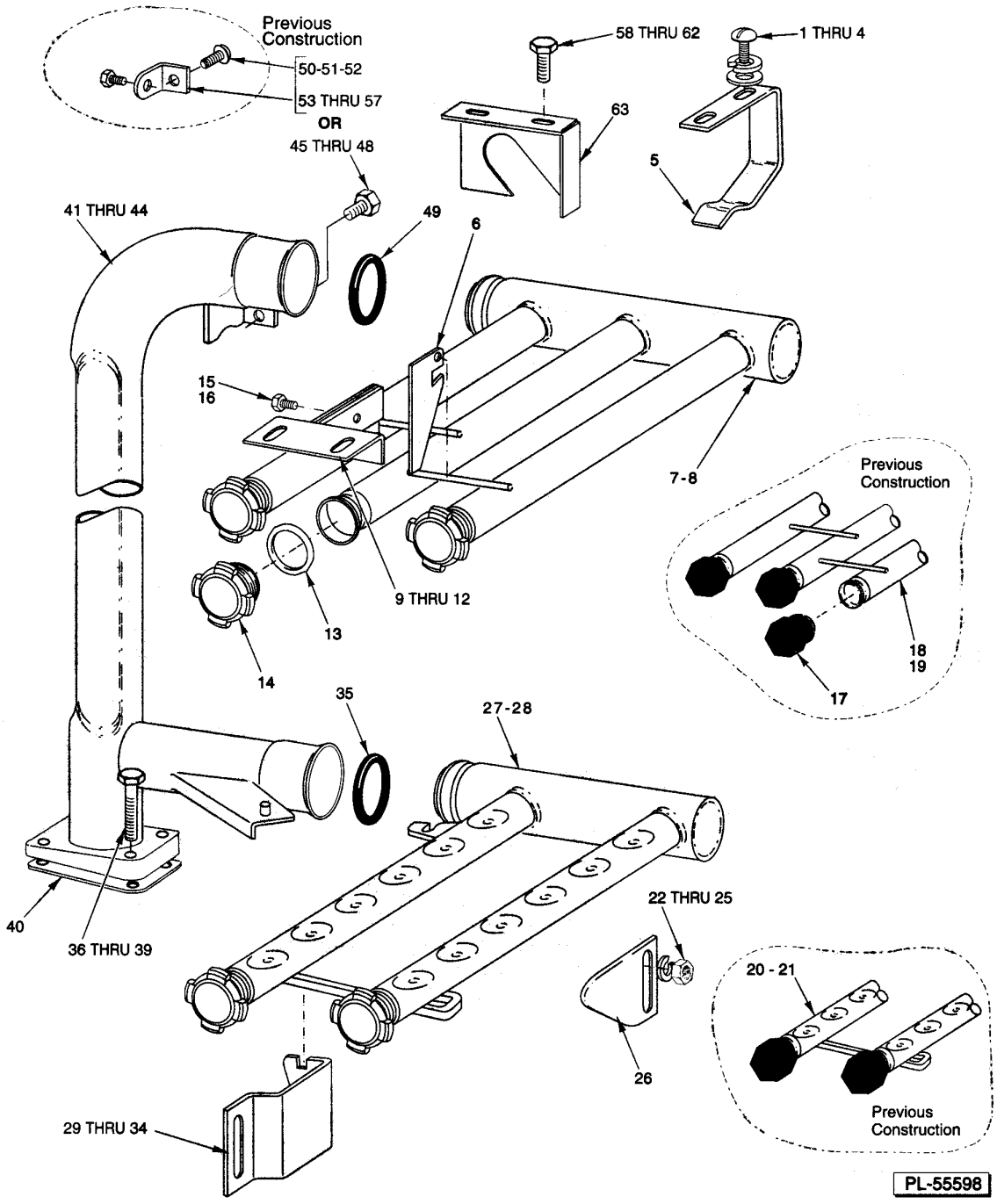

PREWASH ARMS AND TUBES

PREWASH ARMS AND TUBES

PREWASH ARMS AND TUBES

ILLUS. PL-55598	PART NO.	NAME OF PART	AMT.
1	SC-125-85	Mach. Screw 1/4-20 x 5/8 Truss Hd. (SST)	4
2	WS-022-01	Washer (SST)	8
3	WL-006-17	Lockwasher 1/4 Helical (SST)	4
4	NS-015-01	Nut 1/4-20 Hex (SST)	4
5	00-271026	Hanger - Upper Wash Arm	2
6	00-289760	Latch	1
7	00-749417	Wash Arm - Upper (R-L)	1
8	00-749419	Wash Arm - Upper (L-R)	1
9	00-271031	Bracket	1
10	WS-017-08	Washer (0.328 x 0.625 x 0.062) (SST)	2
11	WL-006-23	Lockwasher 5/16 Helical (SST)	2
12	NS-015-11	Nut 5/16-18 Hex (SST)	2
13	00-067500-00127	O-Ring - AS568 Size 124 (1.237 x .103)	5
14	00-475589	Plug - Wash Arm	5
15	SC-041-01	Cap Screw 1/4-20 x 3/4 Hex Hd. (SST)	2
16	NS-031-19	Stop Nut 1/4-20 Elastic (SST)	2
17	00-475087	Plug - Wash Arm	5
*18	00-436946	Wash Arm - Upper (R-L)	1
*19	00-436945	NLA - Obsolete--Wash Arm - Upper (RH) (Shown)	1
*20	00-274248	NLA - Obsolete--Wash Arm - Lower (R-L)	1
*21	00-274251	Wash Arm - Lower (L-R)	1
22	NS-015-11	Nut 5/16-18 Hex (SST)	2
23	WL-006-23	Lockwasher 5/16 Helical (SST)	2
24	WS-017-08	Washer (0.328 x 0.625 x 0.062) (SST)	2
25	SC-041-13	Cap Screw 5/16-18 x 1 Hex Hd. (SST)	2
26	00-274222	Support - Adjustable	1
27	00-749422	Wash Arm - Lower (R-L)	1
28	00-749429	Wash Arm - Lower (L-R)	1
29	00-274108-00002	Catch - Adjustable (R-L)	1
30	00-274108-00001	Catch - Adjustable (L-R)	1
31	NS-015-11	Nut 5/16-18 Hex (SST)	2
32	WL-006-23	Lockwasher 5/16 Helical (SST)	2
33	WS-017-08	Washer (0.328 x 0.625 x 0.062) (SST)	2
34	SC-041-11	Cap Screw 5/16-18 x 3/4 Hex Hd. (SST)	2
35	00-067500-00110	O-Ring	1
36	SC-041-18	Cap Screw 5/16-18 x 1-3/4 Hex Hd. (SST)	4
37	WS-017-08	Washer (0.328 x 0.625 x 0.062) (SST)	8
38	WL-006-23	Lockwasher 5/16 Helical (SST)	4
39	NS-015-11	Nut 5/16-18 Hex (SST)	4
40	00-270968	Gasket - Wash Pipe	1
41	00-274061	Wash Pipe (R-L, with Lower Wash Arm) (261/8 Ht.)	1
42	00-274062	Wash Pipe (L-R, with Lower Wash Arm) (261/8 Ht.)	1
43	00-274576	Wash Pipe (R-L, with Lower Wash Arm) (321/8 Ht.)	1
44	00-274731	Wash Pipe (L-R, with Lower Wash Arm) (321/8 Ht.)	1
45	SC-041-01	Cap Screw 1/4-20 x 3/4 Hex Hd. (SST)	1
46	WS-022-01	Washer (SST)	2
47	WL-006-17	Lockwasher 1/4 Helical (SST)	1
48	NS-015-01	Nut 1/4-20 Hex (SST)	1
49	00-067500-00110	O-Ring	1
50	SC-053-42	Mach. Screw 1/4-20 x 5/8 Truss Hd. (SST)	1
51	WL-006-17	Lockwasher 1/4 Helical (SST)	1
52	NS-015-01	Nut 1/4-20 Hex (SST)	1
53	00-185732	Bracket	1
54	SC-041-05	Cap Screw 1/4-20 x 5/8 Hex Hd. (SST)	1
55	WS-022-01	Washer (SST)	1

PREWASH ARMS AND TUBES

ILLUS. PL-55598	PART NO.	NAME OF PART	AMT.
56	WL-006-17	Lockwasher 1/4 Helical (SST)	1
57	NS-015-01	Nut 1/4-20 Hex (SST)	1
58	SC-041-11	Cap Screw 5/16-18 x 3/4 Hex Hd. (SST)	2
59	WS-017-01	Washer 0.328 x 0.875 x 0.062 (SST)	2
60	WS-017-08	Washer (0.328 x 0.625 x 0.062) (SST)	2
61	WL-006-23	Lockwasher 5/16 Helical (SST)	2
62	NS-015-11	Nut 5/16-18 Hex (SST)	2
63	00-271029	Guide - Upper Wash Arm	1

* Obsolete part number. For replacement, use item 7, 8, 27, or 28 with items 13 & 14.

NOTES

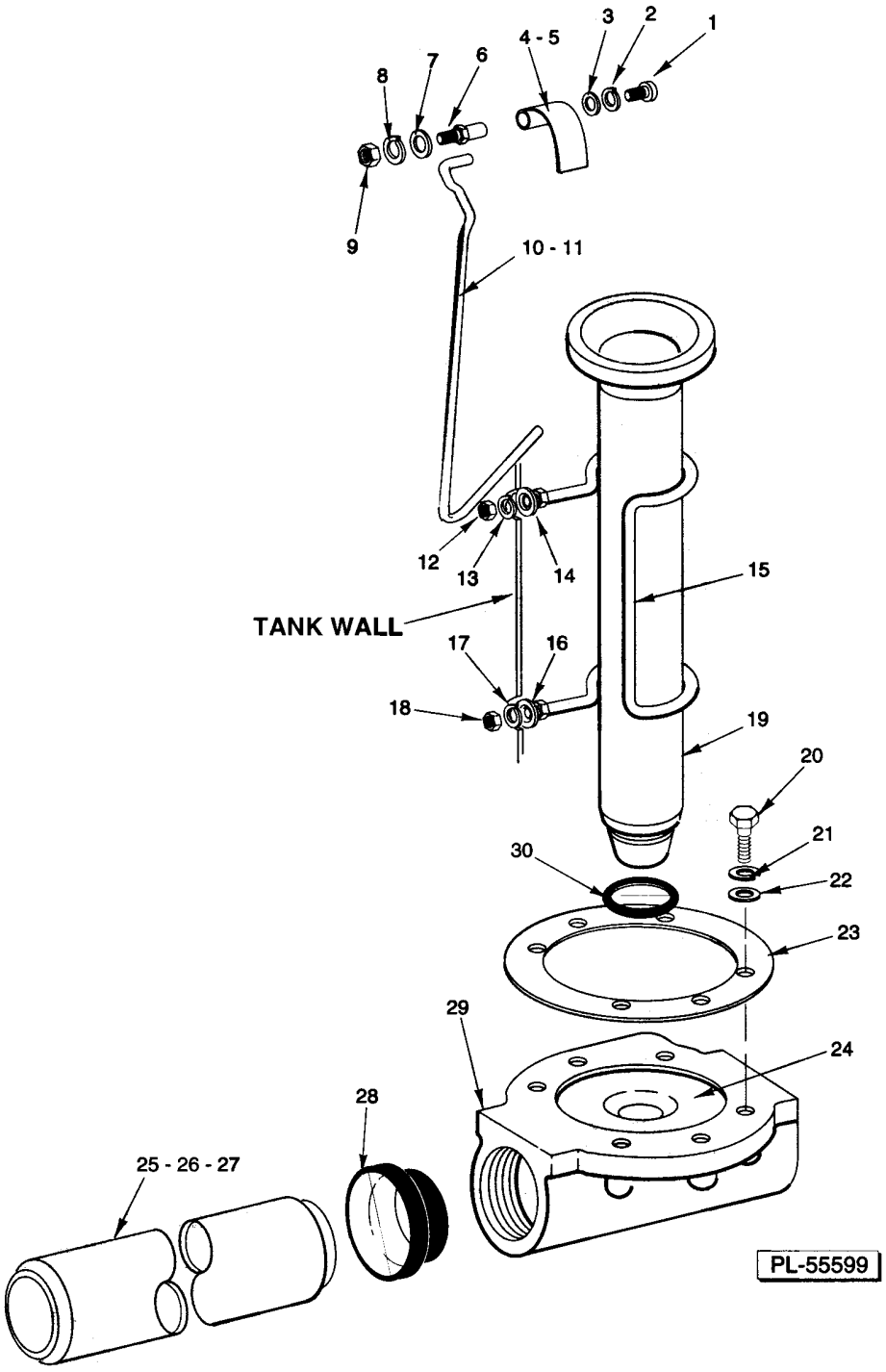
1
2
3
4 - 5
6
7
8
9
10 - 11
12
13
14
15
TANK WALL
16
17
18
19
20
21
22
23
24
25 - 26 - 27
28
29
30
PL-55599

DRAIN

DRAIN

DRAIN

ILLUS. PL-55599	PART NO.	NAME OF PART	AMT.
1	SC-114-15	Mach. Screw 10-24 x 3/8 Rd. Hd. (SST)	1
2	WL-006-07	Lockwasher #10 Helical (SST)	1
3	WS-019-06	Washer (SST)	1
4	00-274096	Drain Lever (R-L)	1
5	00-271070	Drain Lever (L-R)	1
6	00-119116	Axle - Drain Lever	1
7	WS-022-01	Washer (SST)	1
8	WL-006-17	Lockwasher 1/4 Helical (SST)	1
9	NS-015-01	Nut 1/4-20 Hex (SST)	1
10	00-274080	Lift Rod Overflow (R-L)	1
11	00-274079	Lift Rod Overflow (L-R)	1
12	NS-015-11	Nut 5/16-18 Hex (SST)	2
13	WL-006-23	Lockwasher 5/16 Helical (SST)	1
14	WS-017-01	Washer 0.328 x 0.875 x 0.062 (SST)	2
15	00-270952	Retainer	1
16	WS-017-01	Washer 0.328 x 0.875 x 0.062 (SST)	2
17	WL-006-23	Lockwasher 5/16 Helical (SST)	1
18	NS-015-11	Nut 5/16-18 Hex (SST)	2
19	00-119099-00002	Tube - Overflow	1
20	SC-041-28	Cap Screw 3/8-16 x 3/4 Hex Hd. (SST)	6
21	WL-006-28	Lockwasher 3/8 Helical (SST)	6
22	WS-006-44	Washer (SST)	6
23	00-289464	Gasket - Drain	1
24	00-270947	Sleeve - Drain Body	1
25	00-274132-00003	Pipe - Drain (R-L) (FRC80, FRC90A, & FRC124A)	1
26	00-274132-00004	Pipe - Drain (L-R) (FRC80, FRC90A, & FRC124A)	1
27	00-274132-00007	Pipe - Drain (FRC100A)	1
28	00-328813	Bushing - Drain	AR
29	00-289465	Drain Body	1
30	00-067500-00120	O-Ring	1

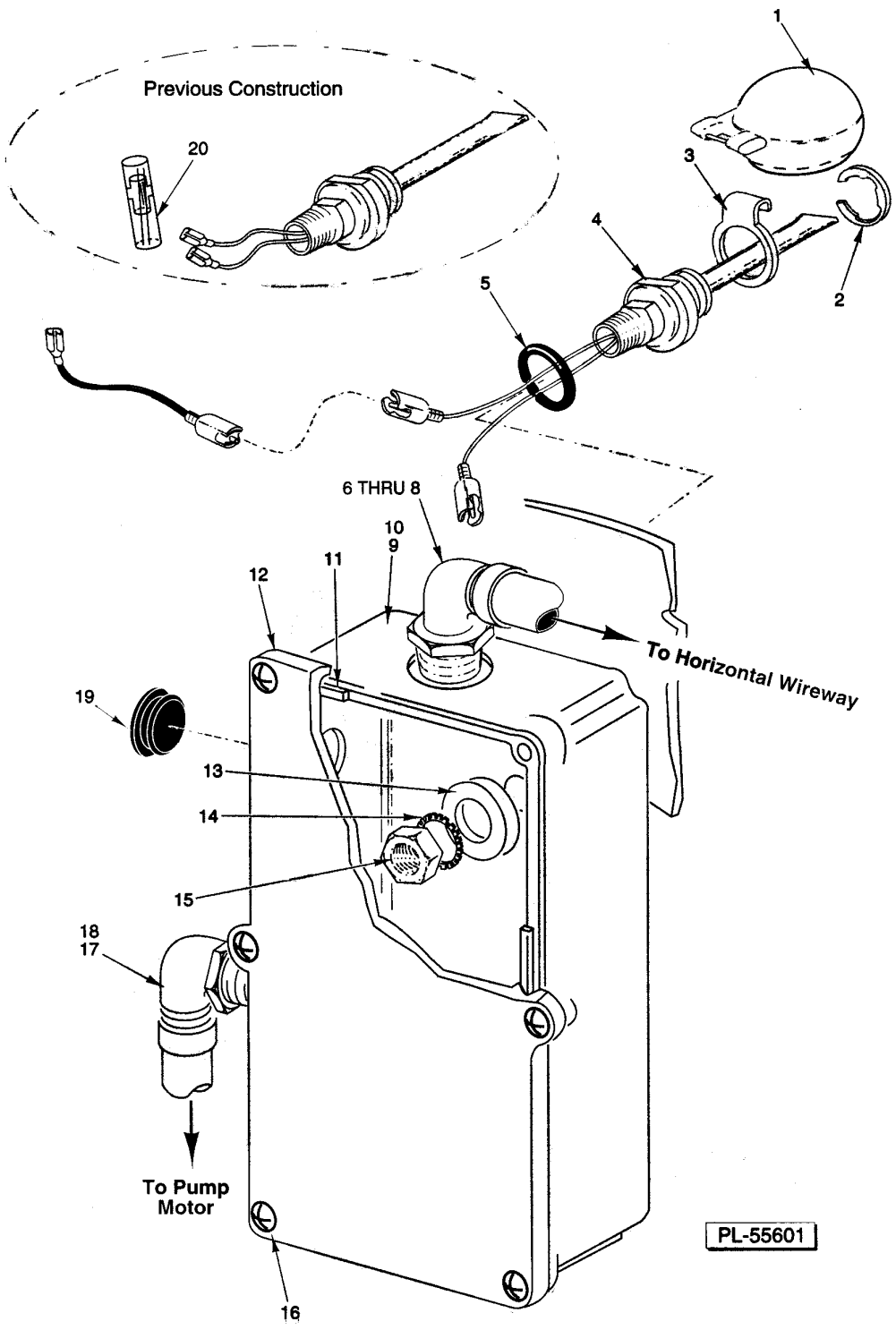

WATER LEVEL FLOATS

WATER LEVEL FLOATS

WATER LEVEL FLOATS

ILLUS. PL-55601	PART NO.	NAME OF PART	AMT.
1	00-122674	Float Assy	2
2	RR-010-13	Retaining Ring	2
3	00-112467	Retainer - Float	2
4	00-328495	Switch & Probe Assy. (Incls. Items 1, 2, & 3) (Must Order 2 Jumper Wires Part # 328758)	2
5	00-067500-00072	O-Ring	2
6	FE-024-58	Connector - Straight (Non-Metallic) Sealtite (3/4 Male Thd. x 3/4 Flex Cnd.)	1
7	FE-024-66	Connector 90 Deg. (Non-Metallic) Sealtite (3/4 Male Thd. x 3/4 Flex Cnd.)	1
8	FE-008-11	Gasket - Electrical	AR
9	00-274097	Box - Probe (L-R)	1
10	00-274224	Box - Probe (R-L)	1
11	00-112005	Gasket (Lid)	1
12	00-289146-00001	Lid & Gasket Assy. (Incls. Item 11)	1
13	WS-010-40	Washer - Thrust	2
14	WL-014-31	Lockwasher 1/2 External Shakeproof (SST)	2
15	NS-018-28	Jam Nut 1/2-20 Hex (SST)	2
16	SD-012-20	Self-Tapping Screw 8-32 x 1/2 Phil. Truss Hd., Type T	6
17	FE-024-61	Connector - 45 Deg. (Non-Metallic) Sealtite (1/2 Male Thd. x 1/2 Flex Cnd.)	2
18	FE-008-10	1/2 Gasket Assy	2
19	PB-004-08	Plug Button Heyco #2703	1
20	00-065890-00085	Line - Splice (Shown)	AR

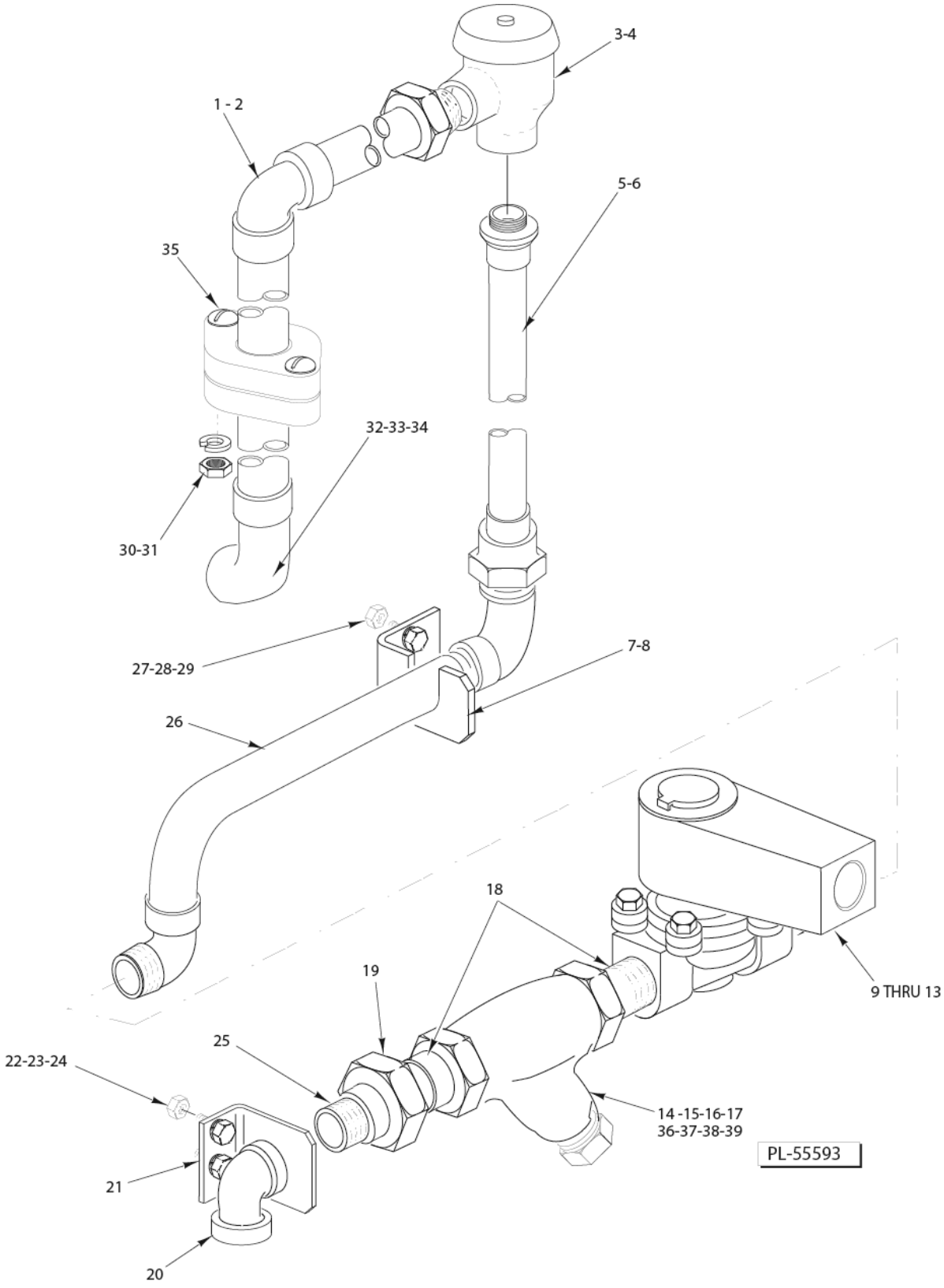

PREWASH TEMPERATURE CONTROL - PIPING

PREWASH TEMPERATURE CONTROL - PIPING

ILLUS. PL-55593	PART NO.	NAME OF PART	AMT.
1	00-274486	Piping - Upper Prewash	1
2	00-276407	Gasket - Rinse Pipe	1
3	00-292909-00002	Breaker - Vacuum 1/2 (Incls. Item 28)	1
4	00-292910	Vacuum Breaker Float & Seal Assy	1
5	00-292911-00003	Piping (433/8)	1
6	00-292911-00004	Piping (493/8)	1
7	00-274481-00001	Bracket - Piping (R-L)	1
8	00-274481-00002	Bracket - Piping (L-R)	1
9	00-270329-00002	Valve - Solenoid (240 V.) (FRC66A & FRC80A, Without Pilot Circuit) (Incls. Items 10 & 13)	1
10	00-270318-00002	Coil - Solenoid Valve (240 V.)	1
11	00-270329-00001	Valve - Solenoid (120 V.) (Incls. Items 12 & 13)	1
12	00-270318-00001	Coil - Solenoid Valve (120 V.)	1
13	00-270336	Service Kit - Solenoid Valve	1
*14	00-186922	Strainer - Line 3/4 (Brass) (Incls. Items 15, 16, & 17) (Alternate to Item 36)	1
15	00-186923	Plug - Branch	1
16	00-186924	Gasket - Branch Plug	1
17	00-186925	Screen - Line Strainer	1
18	FP-041-50	Pipe 3/4 x 13/8 TBE (Brass)	2
19	FP-022-18	Union - Pipe 3/4 Straight Female (Brass)	1
20	FP-015-23	Elbow 3/4 x 90 Deg. (Brass)	1
21	00-435797	Bracket - Piping	1
22	SC-041-10	Cap Screw 5/16-18 x 5/8 Hex Hd. (SST)	2
23	WL-006-22	Lockwasher 5/16 Light (SST)	2
24	NS-015-11	Nut 5/16-18 Hex (SST)	2
25	FP-041-55	Pipe 3/4 x 2 1/8 (Brass)	1
26	00-274485	Piping - Lower	1
27	SC-041-10	Cap Screw 5/16-18 x 5/8 Hex Hd. (SST)	2
28	WL-006-22	Lockwasher 5/16 Light (SST)	2
29	NS-015-11	Nut 5/16-18 Hex (SST)	2
30	WL-006-22	Lockwasher 5/16 Light (SST)	2
31	NS-015-11	Nut 5/16-18 Hex (SST)	2
32	00-289971-00001	Inside Fill Pipe Assy. (L-R)	1
33	00-289971-00002	Inside Fill Pipe Assy. (R-L)	1
34	00-067500-00013	O-Ring	1
35	SC-128-07	Mach. Screw 5/16-18 x 11/4 Rd. Hd. (SST)	2
*36	00-186922	Strainer - Line (3/4 In.) (Brass) (Apollo / Conbraco) (Incls. Items 37, 38, & 39) (Alternate to Item 14)	1
37	00-749802-00001	Cap	1
38	00-749802-00002	Gasket	1
39	00-749802-00003	Screen (80 Mesh)	1

* Kitz line strainer is approx. 1/4" shorter than Apollo / Conbraco.

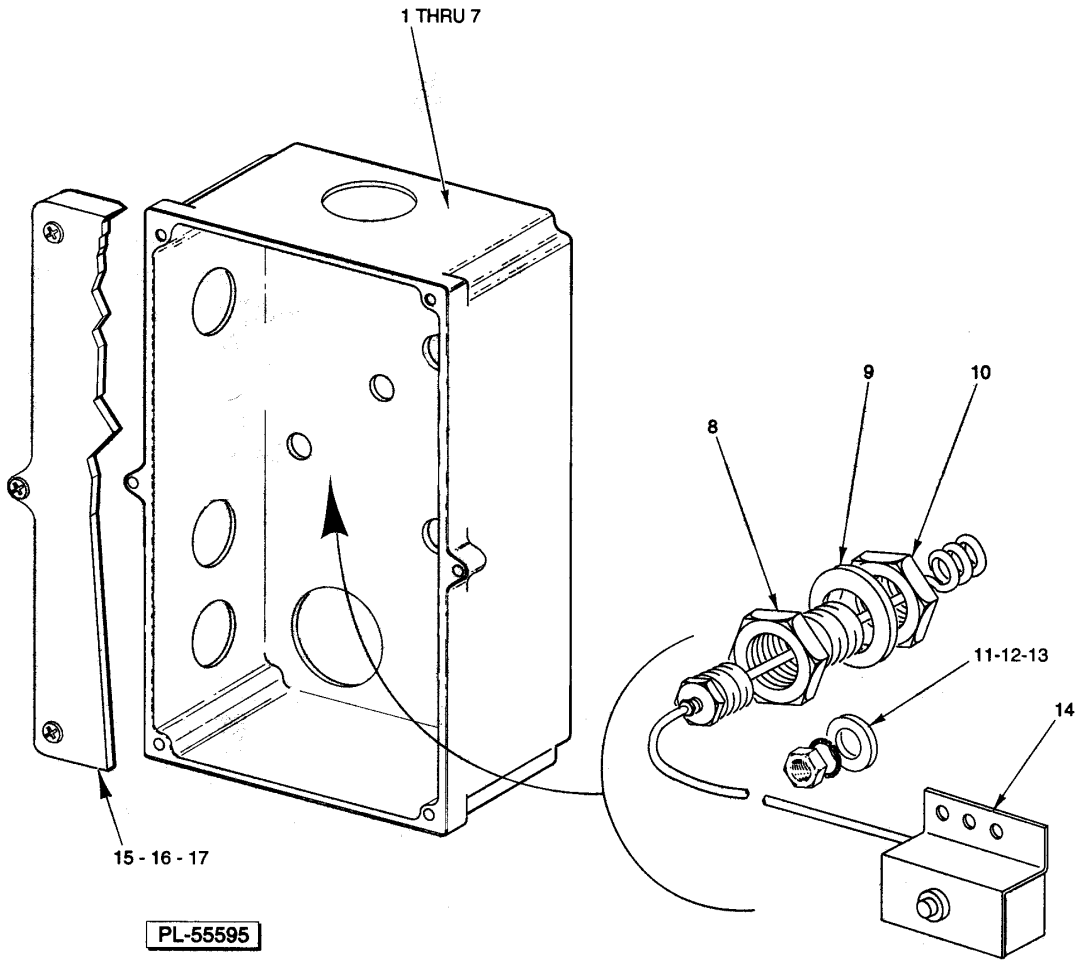

PREWASH TEMPERATURE CONTROL – ELECTRICAL

PREWASH TEMPERATURE CONTROL - ELECTRICAL

PREWASH TEMPERATURE CONTROL - ELECTRICAL

ILLUS. PL-55595	PART NO.	NAME OF PART	AMT.
1	00-274253	Box - Float & Probe (R-L) (Previous Construction)	1
2	00-274254	Box - Float & Probe (L-R) (Previous Construction)	1
3	00-749116	Box - Float & Probe (R-L)	1
4	00-749115	Box - Float & Probe (L-R)	1
5	FE-007-03	Connector - 90 Deg. Sealtite (1/2 Male Thd. x 3/8 Flex. Cnd.)	1
6	FE-007-01	Connector - Straight Sealtite (1/2 Male Thd. x 3/8 Flex. Cnd.)	1
7	FE-008-10	1/2 Gasket Assy	1
8	00-079531	Adapter - Tank	1
9	WS-012-40	Washer (SST)	1
10	FP-053-05	Pipe Lock Nut 1/2 NPSL (SST)	1
11	NS-011-18	Nut 10-24 Hex (SST)	2
12	WL-006-07	Lockwasher #10 Helical (SST)	2
13	WS-019-06	Washer (SST)	2
14	00-294681-021-6	Thermostat - Tank Heat	1
15	00-289146-00001	Lid & Gasket Assy	1
16	00-112005	Gasket (Lid)	1
17	SD-012-20	Self-Tapping Screw 8-32 x 1/2 Phil. Truss Hd., Type T	6

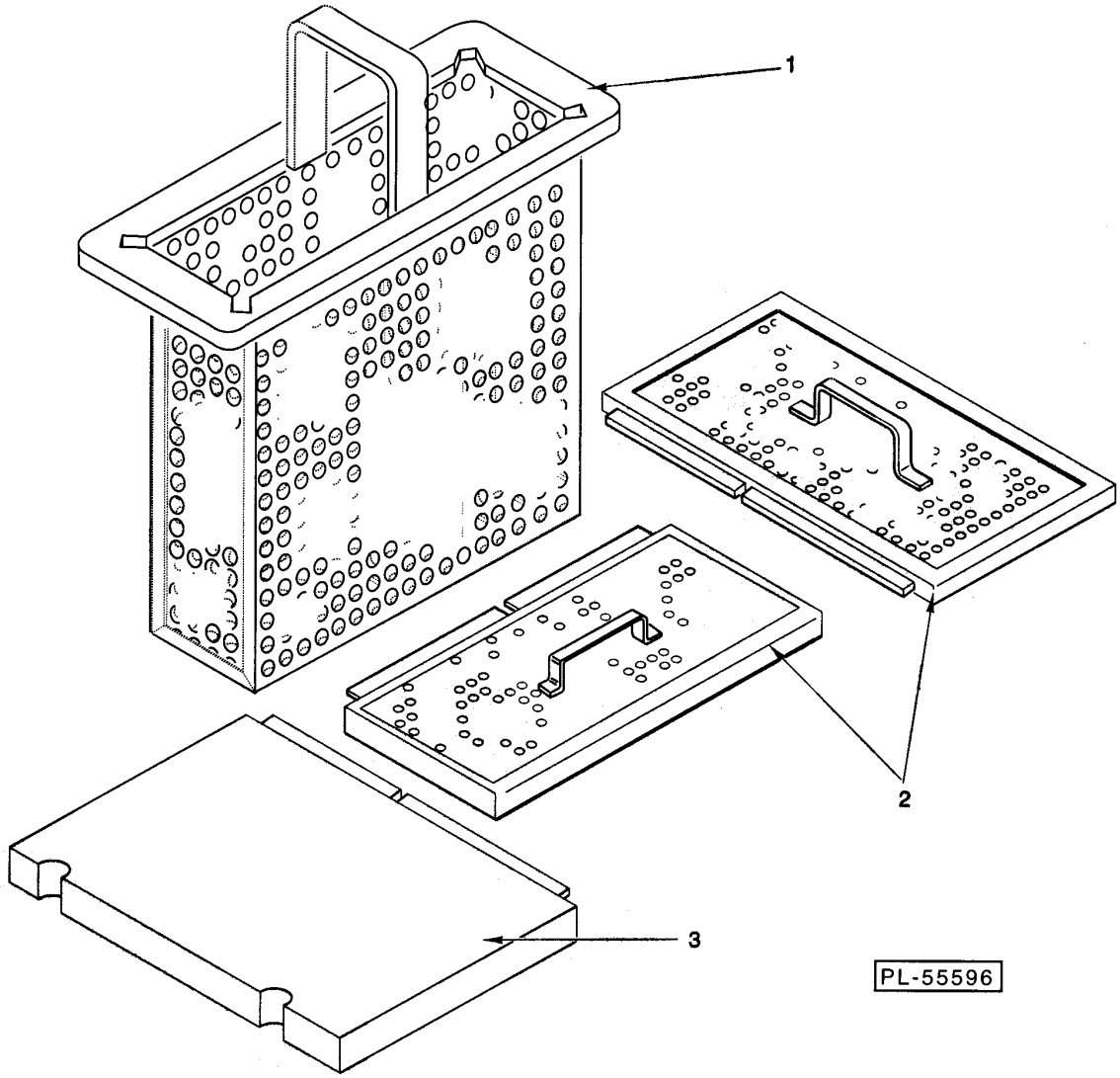

BUCKET AND STRAINER PANS

BUCKET AND STRAINER PANS

BUCKET AND STRAINER PANS

ILLUS. PL-55596	PART NO.	NAME OF PART	AMT.
1	00-271878	Bucket - Strainer	1
2	00-271880	Strainer	2
3	00-274143	Cover - Overflow	1

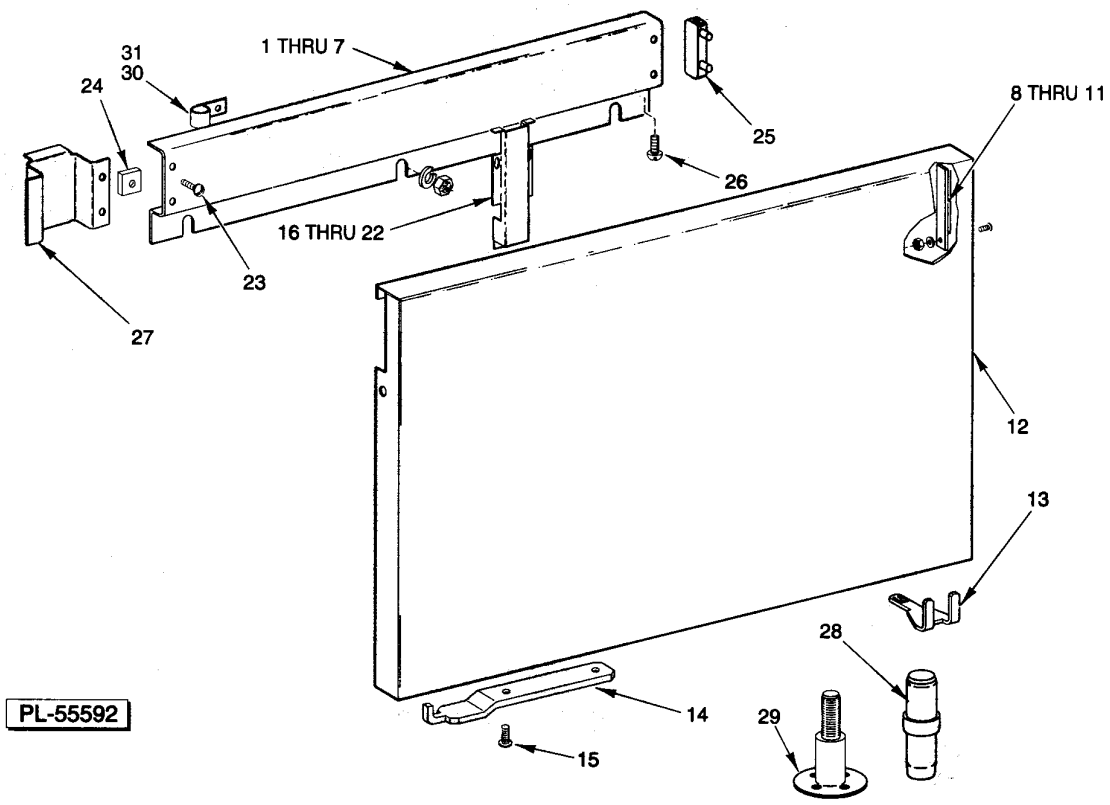

MISCELLANEOUS

MISCELLANEOUS

MISCELLANEOUS

ILLUS. PL-55592	PART NO.	NAME OF PART	AMT.
1	00-274059	Wireway - Horizontal (Front R-L)	1
2	00-274211	Wireway - Horizontal (Front L-R)	1
3	00-274123-00001	Wireway - Horizontal (Rear L-R)	1
4	00-274123-00002	Wireway - Horizontal (Rear R-L)	1
5	NS-015-01	Nut 1/4-20 Hex (SST)	AR
6	WS-017-06	Washer (SST)	AR
7	WL-006-17	Lockwasher 1/4 Helical (SST)	AR
8	00-436888	Cover - Panel Notch	AR
9	WS-019-06	Washer (SST)	AR
10	NS-031-16	Stop Nut 10-24 Hex (SST)	AR
11	SC-053-05	Mach. Screw 10-24 x 3/8 Slotted Truss Hd	AR
12	00-436832-00001	Panel - Front Trim	1
13	00-271061	Support	1
14	00-289771	Retainer - Panel	1
15	SC-053-05	Mach. Screw 10-24 x 3/8 Slotted Truss Hd	2
16	00-271055	Wireway - Vertical	AR
17	SC-021-22	Mach. Screw 10-24 x 3/8 Slotted Rd. Hd. (SST)	AR
18	WL-006-07	Lockwasher #10 Helical (SST)	AR
19	WS-017-06	Washer (SST)	AR
20	WL-006-17	Lockwasher 1/4 Helical (SST)	AR
21	NS-015-01	Nut 1/4-20 Hex (SST)	AR
22	WS-019-19	Washer (SST)	AR
23	SC-021-03	Mach. Screw 4-40 x 3/8 Slotted Rd. Hd. (SST)	2
24	00-072937	Speed Nut 4-40	2
25	00-271057	NLA - Obsolete--Cap - Wireway	AR
26	SD-007-38	Self-Tapping Screw 8 x 1/4 Phil. Bind Hd., Type B	AR
27	00-274252	Raceway - Wire	1
28	00-288946-00002	Foot - Adjustable (11/2 to 23/4)	2
29	00-329688	Foot - Flanged	2
30	00-294677-00003	Clamp - Wire (3/4 I.D.)	2
31	NS-047-94	Lock Nut 3/16 Stud Special	2

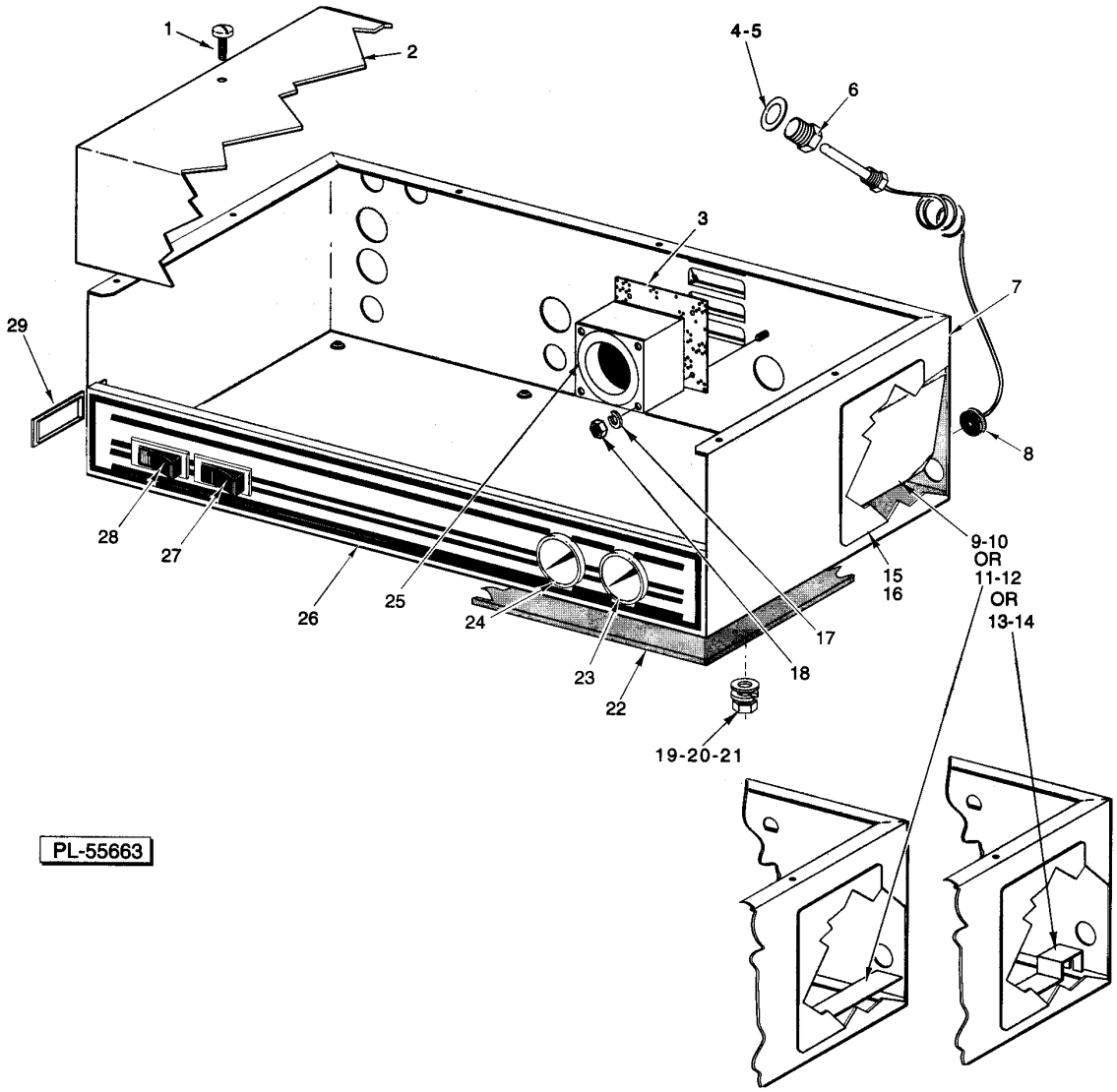

CONTROL BOX

CONTROL BOX

CONTROL BOX

ILLUS. PL-55663	PART NO.	NAME OF PART	AMT.
1	SC-066-05	Mach. Screw 10-24 x 3/8 Phil. Truss Hd. (SST)	2
2	00-436755-00001	Cover - Control Box	1
3	00-274884	Guard - Fan	1
4	WS-012-40	Washer (SST)	4
5	FP-053-05	Pipe Lock Nut 1/2 NPSL (SST)	2
6	00-107218	Coupling - Thermometer Bulb	2
7	00-435505-00001	Control Box (Give Electric Spec., Machine Model, & Serial Number)	1
8	00-274947	Grommet	1
9	00-328137	Shield	1
10	NS-031-15	Stop Nut 10-24 Hex (SST)	2
11	00-274948	Shield	1
12	SD-008-25	Self-Tapping Screw 10-16 x 1/2 Phil. Pan Hd., Type B	1
13	00-474072	Bracket - Capillary	1
14	SD-003-25	Self-Tapping Screw 10-16 Phil. Pan Hd. Type B	2
15	00-274962	Label - Instruction (FRC44A Series)	1
16	00-475088	Label - Instruction (FRC54A Series)	1
17	WL-006-42	Lockwasher #6 Medium (SST)	3
18	NS-011-07	Nut 6-32 Hex (SST)	3
19	WS-022-01	Washer (SST)	6
20	WL-006-17	Lockwasher 1/4 Helical (SST)	6
21	NS-031-21	Stop Nut 1/4-20 Hex (SST)	6
22	00-435072	Gasket	1
23	00-437041-00003	Thermometer (8 Ft.) (Rinse)	1
24	00-437041-00004	Thermometer (11 Ft.) (Wash / Rinse)	1
25	00-355504-00001	Fan (115 V.)	1
26	00-812850	Label - Control Box	AR
27	00-087711-228-1	Switch - Rocker (Motor On/Off)	1
28	00-087711-198-2	Switch - Rocker (Power On/Off)	1
29	00-435382	Blank Switch	1
	FE-021-12	Plug - 1/2 Knockout (Plastic)	AR
	FE-023-26	Plug - 1 Knockout (Plastic)	AR

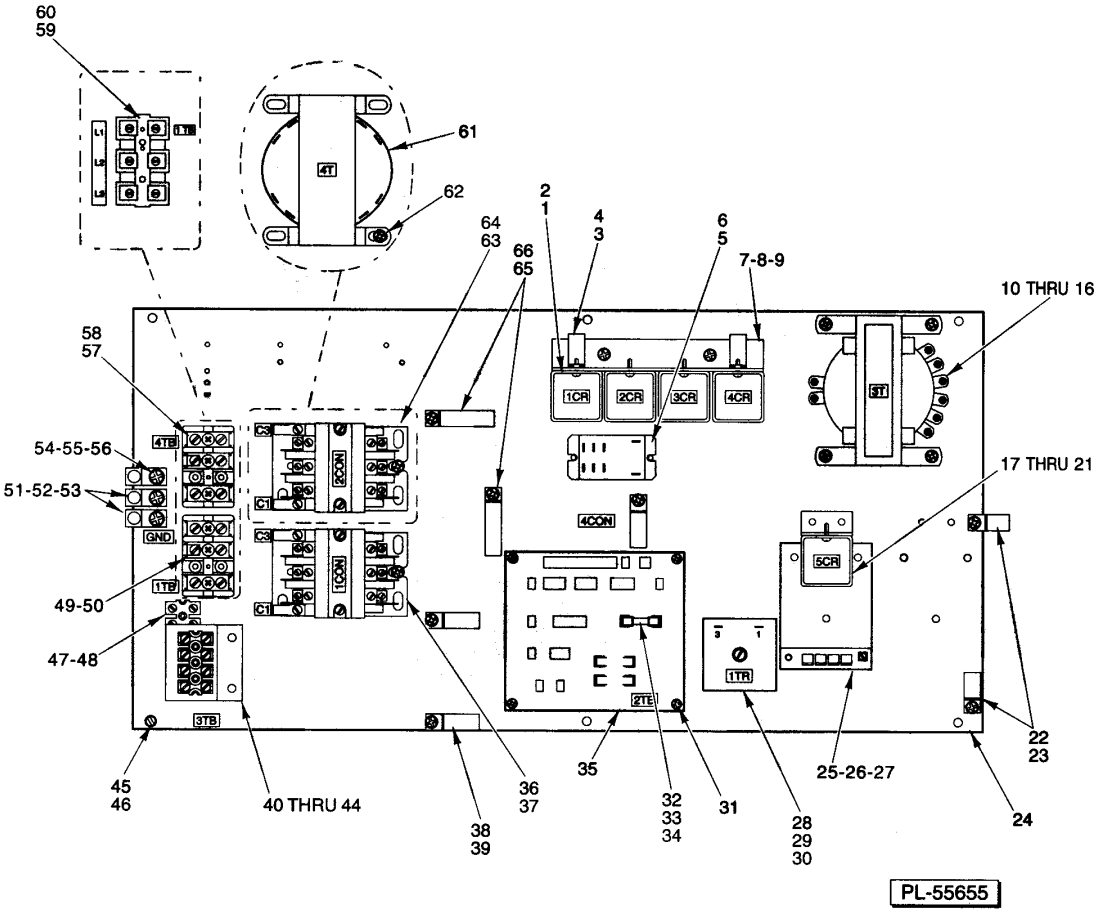

COMPONENT PANEL
(CONTROL BOX)

COMPONENT PANEL
(CONTROL BOX)

COMPONENT PANEL (CONTROL BOX)

ILLUS. PL-55655	PART NO.	NAME OF PART	AMT.
1	00-205113-00001	Relay (3.P.D.T.) Relay - 3 PDT	4
2	SD-019-29	Self-Tapping Screw 6-20 x 1/2 Phil. Pan Hd., Type B	8
3	00-294677-00004	Clamp - Wire (1 I.D.)	2
4	SD-008-25	Self-Tapping Screw 10-16 x 1/2 Phil. Pan Hd., Type B	2
5	87714-46-1	Relay - 2 Pole (30 Amp.)	1
6	SD-008-18	Self-Tapping Screw 8-18 x 3/8 Phil. Bndg. Hd., Type B	2
7	00-437103	Bracket - Relay Mounting	1
8	SD-008-25	Self-Tapping Screw 10-16 x 1/2 Phil. Pan Hd., Type B	2
9	WL-014-07	Lockwasher #10 External Shakeproof (SST)	2
10	00-294500-046-1	Transformer (150 VAC) Pilot Control	1
11	00-294500-046-2	Transformer (300 VAC) Pilot Control	1
12	00-294500-046-3	Transformer (500 VAC) Pilot Control	1
13	SD-008-25	Self-Tapping Screw 10-16 x 3/8 Phil. Bind Hd., Type B (Use W/Item 10 or 11)	4
14	WL-014-07	Lockwasher #10 External Shakeproof (SST) (Use W/Item 10 or 11)	4
15	SD-035-77	Self-Tapping Screw 1/4-20 x 3/8 Phil. Pan Hd., Type TT (Use W/Item 12)	4
16	WL-007-15	Lockwasher 1/4 External Shakeproof (Use W/Item 43)	4
17	00-205113-00001	Relay (3.P.D.T.) Relay - 3 PDT (5CR) (Gas Heat)	1
18	00-437102	Bracket - Relay Mounting	1
19	SD-008-18	Self-Tapping Screw 8-18 x 3/8 Phil. Bind Hd., Type B	2
20	WL-014-05	Lockwasher #8 External Shakeproof (SST)	2
21	SD-019-29	Self-Tapping Screw 6-20 x 1/2 Phil. Pan Hd., Type B	2
22	00-294677-00002	Clamp - Wire (11/2 I.D.)	2
23	SD-008-25	Self-Tapping Screw 10-16 x 1/2 Phil. Pan Hd., Type B	2
24	00-435508	Base Plate	1
25	00-274629-00001	Thermostat - Solid State (120 V.)	1
26	SC-098-07	Mach. Screw 4-40 x 1-3/4 Slotted Rd. Hd. (SST)	3
27	WS-028-12	Washer (Fiber)	3
28	00-087714-031-2	Relay Time Delay (5 Sec.)	1
29	SD-036-13	Self-Tapping Screw 1/4-20 x 1-1/4 Hex. Hex Washer Hd., Type T	1
30	WL-007-15	Lockwasher 1/4 External Shakeproof	1
31	SD-008-18	Self-Tapping Screw 8-18 x 3/8 Phil. Bind Hd., Type B	4
32	FE-022-39	Fuse (1.5 Amp.) (250 V.)	1
33	FE-021-19	Fuse (3.2 Amp.) (125 V.) (50 Hz. & 50/60 Hz. Machines W/Blower Dryer and/or Condenser)	1
34	FE-023-25	Fuse (5 Amp.) (125 V.) (380-480 V. Gas Heat Machine W/Blower Dryer and/or Condenser)	1
35	00-294676	PCB - Terminal & Fuse	1
36	00-087713-040-2	Contactor - 30 Amp., 3 Pole	1
37	SD-008-25	Self-Tapping Screw 10-16 x 1/2 Phil. Pan Hd., Type B	2
38	00-294677-00004	Clamp - Wire (1 I.D.)	3
39	SD-008-25	Self-Tapping Screw 10-16 x 1/2 Phil. Pan Hd., Type B	3
40	00-294325-013-4	Block - Terminal (Machines W/Vent Fan Control)	1
41	00-437101	Bracket - Vent Fan Control	1
42	SD-008-25	Self-Tapping Screw 10-16 x 1/2 Phil. Pan Hd., Type B	2
43	WL-014-07	Lockwasher #10 External Shakeproof (SST)	2
44	SD-019-29	Self-Tapping Screw 6-20 x 1/2 Phil. Pan Hd., Type B	2
45	SC-053-05	Mach. Screw 10-24 x 3/8 Slotted Truss Hd. (SST)	6
46	WL-007-12	Lockwasher #10 External Shakeproof	6
47	00-294325-013-4	Block - Terminal	1
48	SD-019-29	Self-Tapping Screw 6-20 x 1/2 Phil. Pan Hd., Type B	2
49	00-294325-015-1	Block - Terminal (W/O SPEC)	1
50	SD-037-21	Self-Tapping Screw 8-32 x 1 Phil. Fil. Hd., Type F	2
51	00-118544-00002	Lug - Grounding	2
52	SD-035-77	Self-Tapping Screw 1/4-20 x 3/8 Phil. Pan Hd., Type TT	2
53	WL-007-15	Lockwasher 1/4 External Shakeproof	2
54	00-118544-00002	Lug - Grounding (Electric Heat W/O SPEC)	1
55	SD-035-77	Self-Tapping Screw 1/4-20 x 3/8 Phil. Pan Hd., Type TT	1

COMPONENT PANEL
(CONTROL BOX)

ILLUS. PL-55655	PART NO.	NAME OF PART	AMT.
56	WL-007-15	Lockwasher 1/4 External Shakeproof	1
57	00-294325-015-1	Block - Terminal (Electric Heat)	1
58	SD-037-21	Self-Tapping Screw 8-32 x 1 Fil. Phil. Hd. Type F	2
59	00-294325-004-1	Block - Terminal (Electric Heat W/SPEC)	1
60	SD-008-36	Self-Tapping Screw 8-18 x 7/8 Phil. Rd. Hd., Type B	2
61	00-294500-026-1	Transformer 24 & 120 V. Secondary (Gas Heat)	1
62	SD-008-25	Self-Tapping Screw 10-16 x 1/2 Phil. Pan Hd., Type B	4
63	00-918322	Contactor (40 Amp., 3-Pole) Contactor - 40 Amp., 3 Pole (Electric Heat)	1
64	SD-008-25	Self-Tapping Screw 10-16 x 1/2 Phil. Pan Hd., Type B	2
65	00-294677-00005	Clamp - Wire (11/2 I.D.)	2
66	SD-008-25	Self-Tapping Screw 10-16 x 1/2 Phil. Pan Hd., Type B	2

NOTES

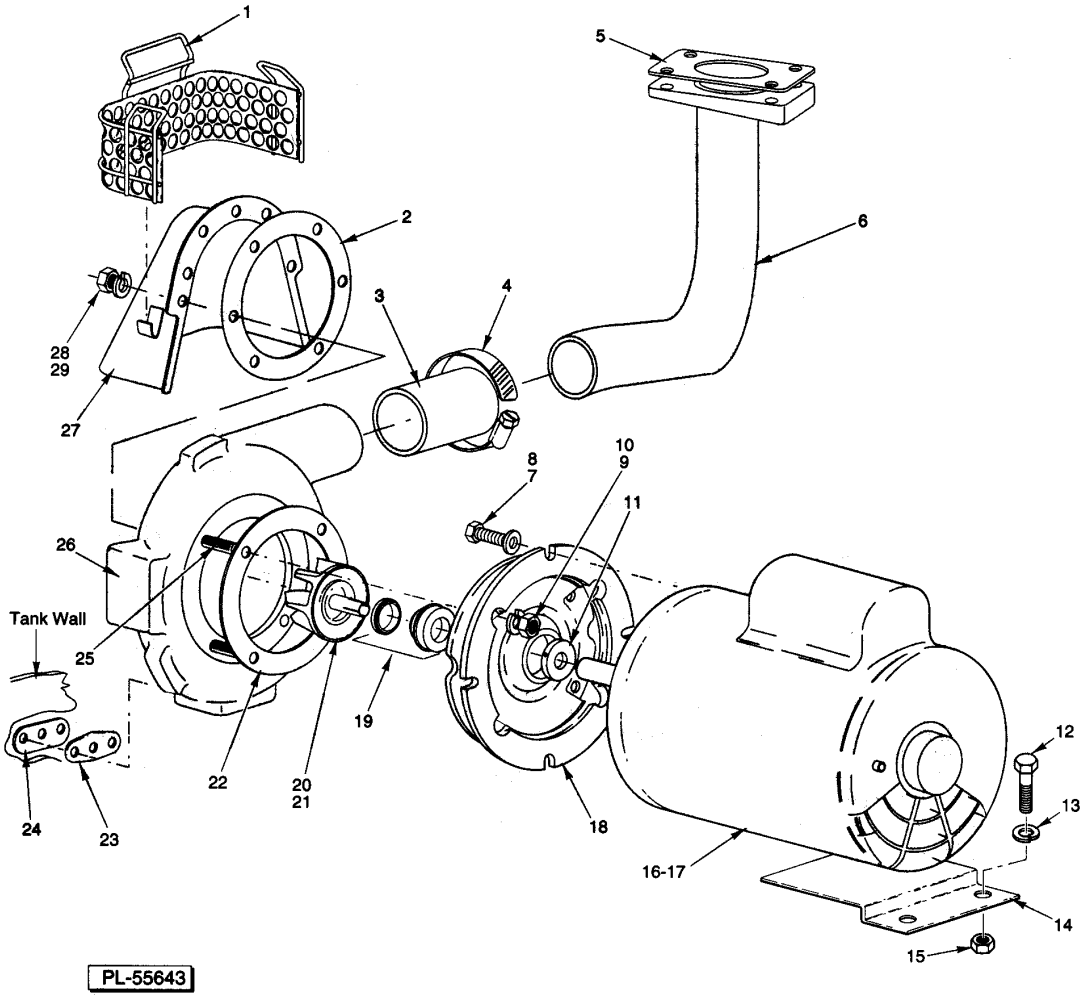

WASH MOTOR AND PUMP UNIT

WASH MOTOR AND PUMP UNIT

WASH MOTOR AND PUMP UNIT

ILLUS. PL-55643	PART NO.	NAME OF PART	AMT.
1	00-328362	Strainer - Pump	1
2	00-119050	Gasket	1
3	00-749586	Hose - Discharge	1
4	00-542337	Clamp - Hose	2
5	00-270968	Gasket - Wash Pipe	1
6	00-270970	Tube - Discharge	1
7	SC-041-29	Cap Screw 3/8-16 x 7/8 Hex Hd. (SST)	4
8	WS-006-44	Washer (SST)	4
9	WL-006-22	Lockwasher 5/16 Light (SST)	4
10	NS-015-11	Nut 5/16-18 Hex (SST)	4
11	00-274227-00002	Clamp	1
12	SC-041-05	Cap Screw 1/4-16 x 5/8 Hex Hd. (SST)	2
13	WL-007-16	Lockwasher 1/4	2
14	00-812069	Bracket - Motor Support	1
15	NS-015-01	Nut 1/4-20 Hex (SST)	2
16	00-274230-00002	Motor (3 Ph., 60 Hz.) (2 Hp.)	1
17	00-274230-00004	Motor (3 Ph., 50 Hz.) (2 Hp.)	1
18	00-274227-00003	Adapter	1
19	00-274227-00006	Seal - Shaft	1
20	00-274227-00007	Impeller & Sleeve (60 Hz.)	1
21	00-274227-00010	Impeller & Sleeve (50 Hz.)	1
22	00-274227-00004	Gasket	1
23	00-119051	Gasket	2
24	00-812776	Plate - Support	2
25	00-274227-00005	Stud	AR
26	00-274227-00001	Pump Shell (Incls. Items 25)	1
27	00-274246	Shroud	1
28	WL-006-23	Lockwasher 5/16 Helical (SST)	10
29	NS-015-11	Nut 5/16-18 Hex (SST)	10

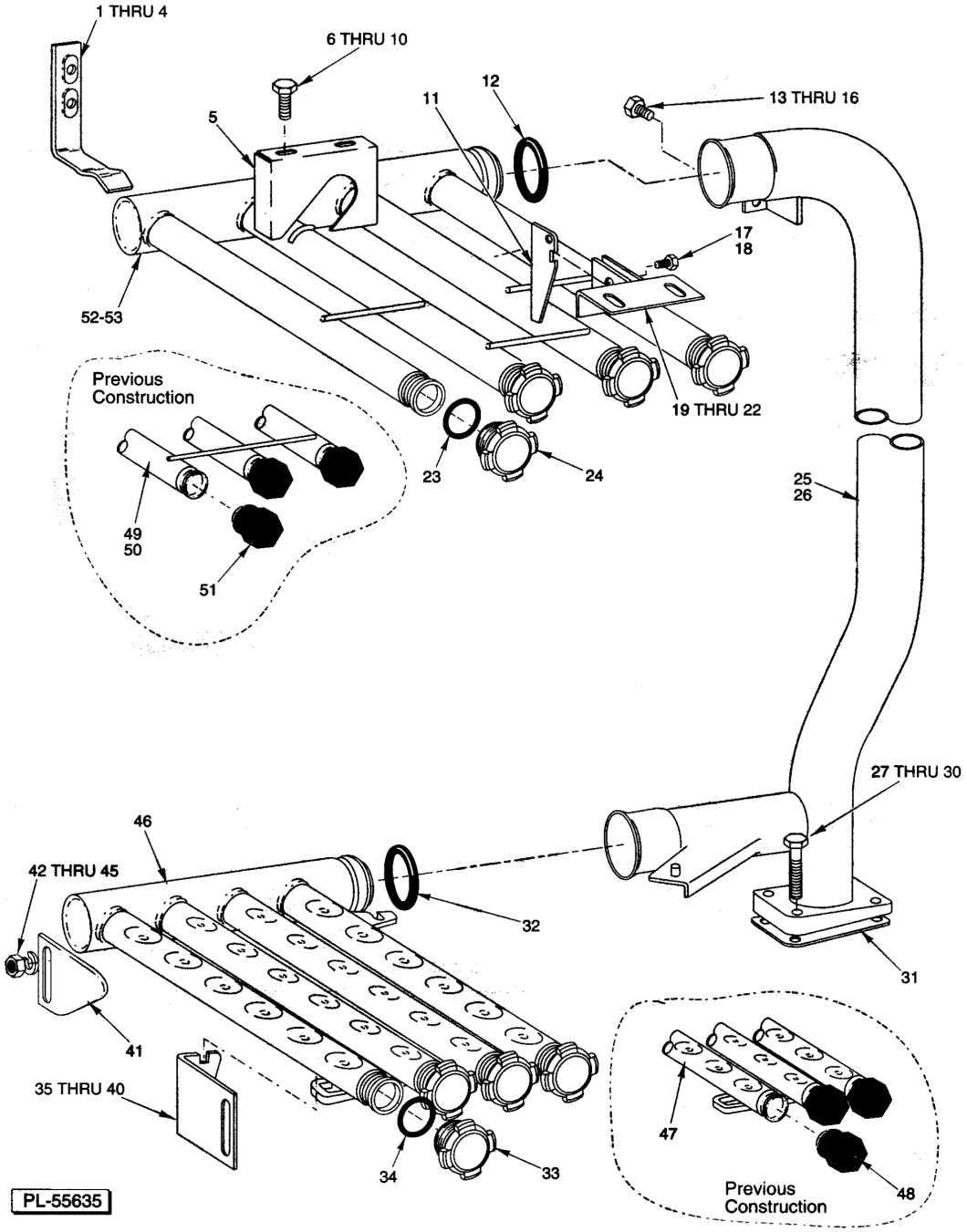

WASH ARMS AND TUBES
(WASH SECTION)

WASH ARMS AND TUBES
(WASH SECTION)

WASH ARMS AND TUBES
(WASH SECTION)

ILLUS. PL-55635	PART NO.	NAME OF PART	AMT.
1	00-436947-00001	Hanger - Upper Wash Arm	AR
2	SC-041-50	Mach. Screw 1/4-20 x 5/8 Truss Hd. (SST)	AR
3	WS-022-01	Washer (SST)	AR
4	WL-006-17	Lockwasher 1/4 Helical (SST)	AR
5	00-436007	Guide - Upper Wash Arm	1
6	SC-041-11	Cap Screw 5/16-18 x 3/4 Hex Hd. (SST)	2
7	WS-017-01	Washer 0.328 x 0.875 x 0.062 (SST)	2
8	WS-017-08	Washer (0.328 x 0.625 x 0.062) (SST)	2
9	WL-006-23	Lockwasher 5/16 Helical (SST)	2
10	NS-015-11	Nut 5/16-18 Hex (SST)	2
11	00-289760	Latch	1
12	00-067500-00110	O-Ring	1
13	SC-041-01	Cap Screw 1/4-20 x 3/4 Hex Hd. (SST)	1
14	WS-022-01	Washer (SST)	2
15	WL-006-17	Lockwasher 1/4 Helical (SST)	1
16	NS-015-01	Nut 1/4-20 Hex (SST)	1
17	SC-041-01	Cap Screw 1/4-20 x 3/4 Hex Hd. (SST)	2
18	NS-031-19	Stop Nut 1/4-20 Elastic (SST)	2
19	00-812817	Bracket (Incls. Items 11, 17, & 18)	1
20	WS-017-08	Washer (0.328 x 0.625 x 0.062) (SST)	2
21	WL-006-23	Lockwasher 5/16 Helical (SST)	2
22	NS-015-11	Nut 5/16-18 Hex (SST)	2
23	00-067500-00127	O-Ring - AS568 Size 124 (1.237 x .103)	AR
24	00-475589	Plug - Wash Arm	AR
25	00-329595	Wash Pipe (261/8 Door Height)	1
26	00-329597	Wash Pipe (321/8 Door Height)	1
27	NS-015-11	Nut 5/16-18 Hex (SST)	4
28	WL-006-23	Lockwasher 5/16 Helical (SST)	4
29	WS-017-08	Washer (0.328 x 0.625 x 0.062) (SST)	8
30	SC-041-18	Cap Screw 5/16-18 x 1-3/4 Hex Hd. (SST)	4
31	00-270968	Gasket - Wash Pipe	1
32	00-067500-00110	O-Ring	1
33	00-475589	Plug - Wash Arm	AR
34	00-067500-00127	O-Ring - AS568 Size 124 (1.237 x .103)	AR
35	00-436939-00002	Catch - Adjustable (RH)	1
36	00-436939-00001	Catch - Adjustable (LH)	1
37	NS-015-11	Nut 5/16-18 Hex (SST)	2
38	WL-006-23	Lockwasher 5/16 Helical (SST)	2
39	WS-017-08	Washer (0.328 x 0.625 x 0.062) (SST)	2
40	SC-041-11	Cap Screw 5/16-18 x 3/4 Hex Hd. (SST)	2
41	00-274222	Support - Adjustable	1
42	SC-041-11	Cap Screw 5/16-18 x 3/4 Hex Hd. (SST)	2
43	WL-006-23	Lockwasher 5/16 Helical (SST)	2
44	WS-017-08	Washer (0.328 x 0.625 x 0.062) (SST)	2
45	NS-015-11	Nut 5/16-18 Hex (SST)	AR
46	00-749405	Wash Arm - Lower	1
47	00-271035	Wash Arm - Lower	1
48	00-475087	Plug - Wash Arm	AR
49	00-271040	Wash Arm - Upper (R-L)	1
50	00-271831	Wash Arm - Upper (L-R)	1
51	00-475087	Plug - Wash Arm	AR
52	00-749406	Wash Arm - Upper (R-L)	1
53	00-749407	Wash Arm - Upper (L-R)	1

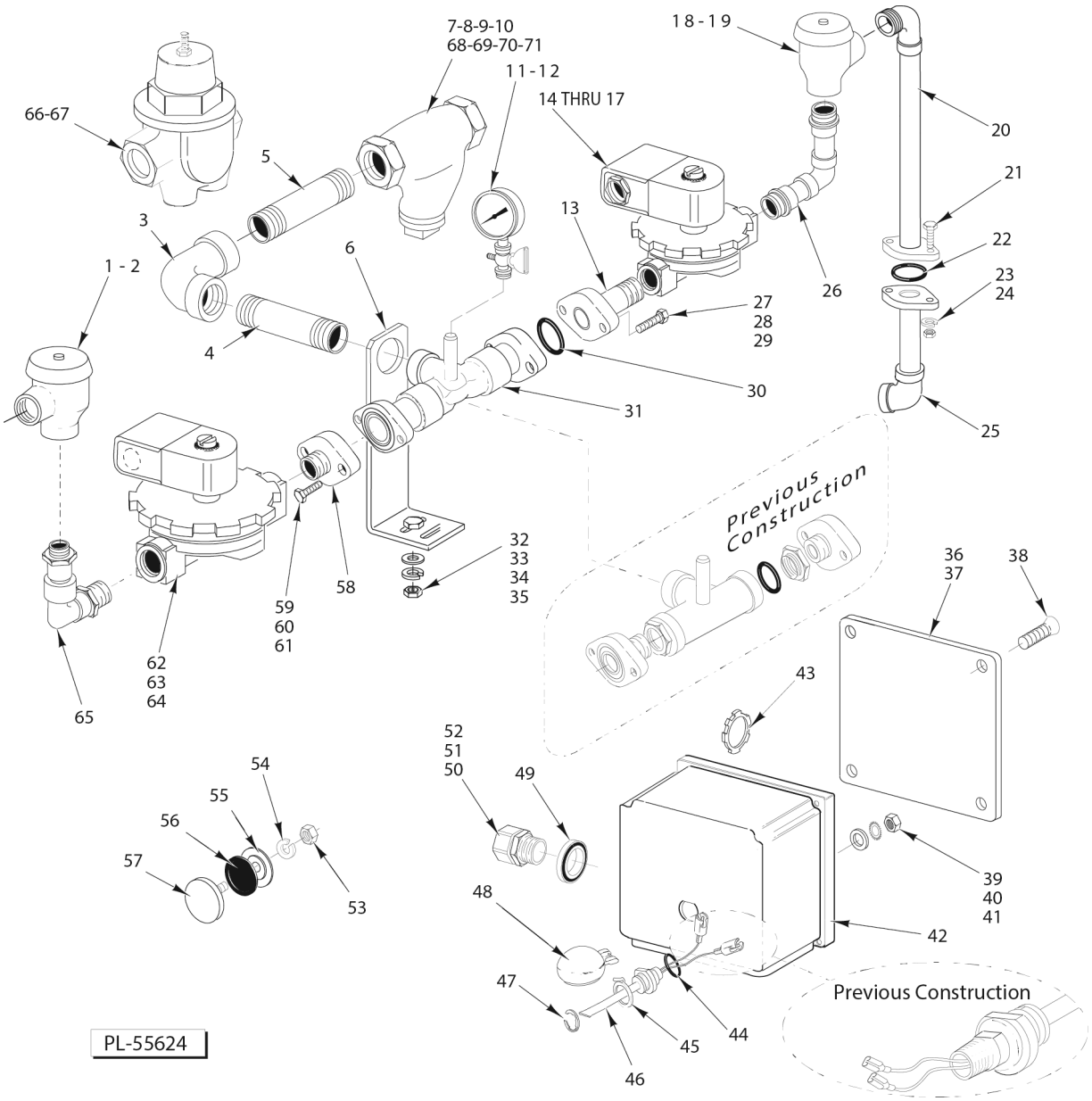

FILL AND OUTSIDE RINSE PIPING
(PREVIOUS CONSTRUCTION)

FILL AND OUTSIDE RINSE PIPING (PREVIOUS CONSTRUCTION)

ILLUS. PL-55624	PART NO.	NAME OF PART	AMT.
1	00-277112	Vacuum Breaker (3/4)	1
2	00-118270	Service Kit - Vacuum Breaker (Float & Seal Assy.)	1
3	FP-015-23	Elbow 3/4 x 90 Deg. (Brass)	1
4	FP-041-88	Pipe 3/4 x 5 Lg. TBE (Brass)	1
5	FP-042-12	Pipe 3/4 x 81/4 Lg. TBE (Brass)	1
6	00-271022	Bracket	1
*7	00-186922	Strainer - Line (3/4 In.) (Brass) (Kitz) (Incls. Items 8, 9, & 10) (Alternate to Item 68)	1
8	00-186923	Plug - Branch	1
9	00-186924	Gasket - Branch Plug	1
10	00-186925	Screen - Line Strainer	1
11	00-328247	Gauge - Water Pressure	1
12	00-436319	Petcock 1/4	1
13	00-063262-00031	Flange & Nipple	1
14	00-271006-00001	Solenoid Valve 3/8 (120 V.) (Incls. Items 17 & 19) (Fill)	1
15	00-271839-00001	Coil - Solenoid Valve	1
16	00-271839-00002	Coil - Solenoid Valve	1
17	00-271837	Service Kit - 1/2 Solenoid Valve	1
18	00-271008	Vacuum Breaker (3/8 In.)	1
19	00-274233	Service Kit - Vacuum Breaker	1
20	00-271007	Fill Piping - Outside	1
21	SC-041-15	Cap Screw 5/16-18 x 11/4 Hex Hd	2
22	00-067500-00012	O-Ring	1
23	WL-006-23	Lockwasher 5/16 Helical (SST)	2
24	NS-015-11	Nut 5/16-18 Hex (SST)	2
25	00-271023	Piping - Inside	1
26	00-271009	Fill Piping	1
27	SC-041-15	Cap Screw 5/16-18 x 11/4 Hex Hd	2
28	WL-006-23	Lockwasher 5/16 Helical (SST)	2
29	NS-015-11	Nut 5/16-18 Hex (SST)	2
30	00-067500-00012	O-Ring	2
31	00-435074	Piping - Common Connection	1
32	NS-015-11	Nut 5/16-18 Hex (SST)	2
33	WL-006-23	Lockwasher 5/16 Helical (SST)	2
34	WS-029-05	Washer 0.328 x 0.750 x 0.062 (SST)	2
35	SC-041-10	Cap Screw 5/16-18 x 5/8 Hex Hd. (SST)	2
**36	00-112007	Gasket	1
**37	00-288465	Lid & Gasket Assy. (Incls. Item 58)	1
**38	SD-012-20	Self-Tapping Screw 8-32 x 1/2 Phil. Truss Hd., Type T	4
**39	NS-018-28	Jam Nut 1/2-20 Hex (SST)	1
**40	WL-014-31	Lockwasher 1/2 External Shakeproof (SST)	1
**41	WS-010-40	Washer - Thrust	1
**42	00-270926	Junction Box - Auto Fill (RH) (R-L)	1
**43	FE-006-07	Lock Nut 1/2 (Cnd.)	1
**44	00-067500-00072	O-Ring	1
**45	00-112467	Retainer - Float	1
***46	00-328486	Probe & Switch Assy. (2 Wire) (Water Level) (Incls. Items 45, 47, & 48)	1
**47	RR-010-13	Retaining Ring	1
**48	00-122674	Float Assy	1
**49	FE-008-10	1/2 Gasket Assy	2
**50	FE-006-45	Connector - Straight 1/2 (Thinwall)	1
**51	FE-024-49	Connector - Straight 1/2 (Thinwall)	1
**52	FE-006-05	Lock Nut 1/2	1
****53	NS-015-01	Nut 1/4-20 Hex (SST)	1
****54	WL-006-17	Lockwasher 1/4 Helical (SST)	1
****55	00-119254	Retainer - Cap & Stud	1

FILL AND OUTSIDE RINSE PIPING
(PREVIOUS CONSTRUCTION)

ILLUS. PL-55624	PART NO.	NAME OF PART	AMT.
****56	00-067500-00031	O-Ring	1
****57	00-119244	Cap & Stud Assy	1
58	00-063262-00006	Flange & Nipple	1
59	SC-041-15	Cap Screw 5/16-18 x 11/4 Hex Hd	2
60	WL-006-23	Lockwasher 5/16 Helical (SST)	2
61	NS-015-11	Nut 5/16-18 Hex (SST)	2
62	00-271002-00001	Solenoid Valve 3/4 (120 V.) (Incls. Items 63 & 64) (Rinse)	1
63	00-271839-00001	Coil - Solenoid Valve (120 V.)	1
64	00-271838	Service Kit - 3/4 Solenoid Valve	1
65	00-271001	Piping - Final Rinse	1
66	00-893294	Valve - Pressure Regulating (3/4 In.)	1
67	00-289091-00001	Kit - Service	1
*68	00-186922	Strainer - Line (3/4 In.) (Brass) (Apollo / Conbraco) (Incls. Items 30, 31, & 32) (Alternate to Item 7)	1
69	00-749802-00001	Cap	1
70	00-749802-00002	Gasket	1
71	00-749802-00003	Screen (80 Mesh)	1

* Kitz line strainer is approx. 1/4" shorter than Apollo / Conbraco.
** FRC54A, 44A.
*** Must order two jumper wires, Part #328758.
**** FRC76A, 66A & FRC90A, 80A.

NOTES

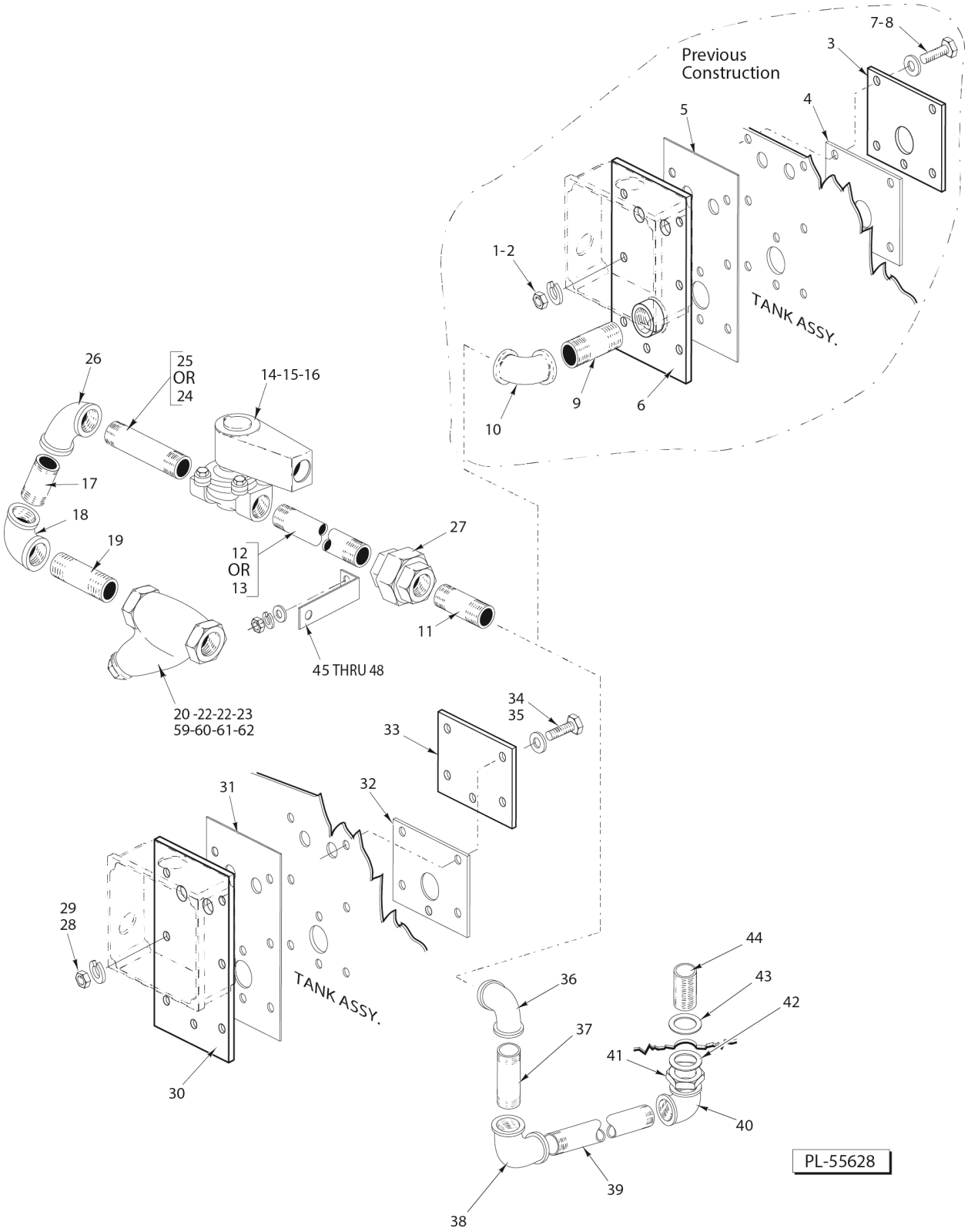

FILL AND OUTSIDE RINSE PIPING
(CURRENT CONSTRUCTION)

FILL AND OUTSIDE RINSE PIPING (CURRENT CONSTRUCTION)

ILLUS. PL-55628	PART NO.	NAME OF PART	AMT.
*1	00-186922	Strainer - Line (3/4 In.) (Brass) (Kitz) (Incls. Items 2, 3, & 4) (Alternate to item 59)	1
2	00-186923	Plug - Branch	1
3	00-186924	Gasket - Branch Plug	1
4	00-186925	Screen - Line Strainer	1
5	00-328247	Gauge - Water Pressure	1
6	00-436319	Petcock 1/4	1
7	00-271006-00001	Solenoid Valve 3/8 (120 V.) (Incls. Items 8 & 9)	1
8	00-271839-00001	Coil - Solenoid Valve	1
9	00-271837	Service Kit - 1/2 Solenoid Valve	1
10	00-271008-00002	Vacuum Breaker 3/8	1
11	00-274233	Service Kit - Vacuum Breaker	1
12	00-329609	Fill Piping - Outside	1
13	SC-041-15	Cap Screw 5/16-18 x 11/4 Hex Hd	2
14	00-067500-00012	O-Ring	1
15	00-328765	Adapter - Elbow	1
16	WL-006-23	Lockwasher 5/16 Helical (SST)	2
17	NS-015-11	Nut 5/16-18 Hex (SST)	2
18	00-435972-00002	Piping - Inside (RH)	1
19	00-435972-00001	Piping - Inside (LH)	1
**20	00-288465	Lid & Gasket Assy. (Incls. Item 21)	1
**21	00-112007	Gasket	1
**22	SD-012-20	Self-Tapping Screw 8-32 x 1/2 Phil. Truss Hd., Type T	4
**23	NS-018-28	Jam Nut 1/2-20 Hex (SST)	1
**24	WL-014-31	Lockwasher 1/2 External Shakeproof (SST)	1
**25	WS-010-40	Washer - Thrust	1
**26	00-270926	Junction Box - Auto Fill (RH) (R-L)	1
**27	00-067500-00072	O-Ring	1
**28	00-112467	Retainer - Float	1
**29	00-328486	Probe & Switch Assy. (Water Level) (Incls. Items 27, 28, & 31)	1
**30	RR-010-13	Retaining Ring	1
**31	00-122674	Float Assy	1
**32	FE-006-45	Connector - Straight 1/2 (Thinwall)	1
**33	FE-024-49	Connector - Straight 1/2 (Thinwall)	1
**34	FE-006-05	Lock Nut 1/2	1
**35	FE-008-10	1/2 Gasket Assy	2
**36	FE-006-07	Lock Nut 1/2 (Cnd.)	1
***37	00-119244	Cap & Stud Assy	1
***38	00-067500-00031	O-Ring	1
***39	00-119254	Retainer - Cap & Stud	1
***40	WL-006-17	Lockwasher 1/4 Helical (SST)	1
***41	NS-015-01	Nut 1/4-20 Hex (SST)	1
42	00-435974	Bracket - Fill Piping	1
43	SC-041-12	Cap Screw 5/16-18 x 7/8 Hex Hd. (SST)	2
44	SC-041-11	Cap Screw 5/16-18 x 3/4 Hex Hd. (SST)	2
45	WS-029-05	Washer 0.328 x 0.750 x 0.062 (SST)	6
46	WL-006-23	Lockwasher 5/16 Helical (SST)	4
47	NS-015-11	Nut 5/16-18 Hex (SST)	4
48	00-271002-00001	Solenoid Valve 3/4 (120 V.) (Incls. Items 49 & 50)	1
49	00-271839-00001	Coil - Solenoid Valve	1
50	00-271838	Service Kit - 3/4 Solenoid Valve	1
51	00-328764	Adapter Elbow 3/4 x 90 Deg	1
**52	00-277112-00003	Vacuum Breaker (3/4)	1
53	00-118270	Service Kit - Vacuum Breaker (Float & Seal Assy.)	1
54	00-435967	Plate - Fill Piping	1
55	00-812946-00001	Piping Sub-Assy. R-L	1

FILL AND OUTSIDE RINSE PIPING (CURRENT CONSTRUCTION)

ILLUS. PL-55628	PART NO.	NAME OF PART	AMT.
56	00-812946-00002	Piping Sub-Assy. L-R	1
57	00-893294	Valve - Pressure Regulating (3/4 In.)	1
58	00-289091-00001	Kit - Repair (Pressure Regulating Valve)	1
*59	00-186922	Strainer - Line (3/4 In.) (Brass) (Apollo / Conbraco) (Incls. Items 61, 62, & 63) (Alternate to Item 1)	1
61	00-749802-00001	Cap	1
62	00-749802-00002	Gasket	1
63	00-749802-00003	Screen (80 Mesh)	1

* Kitz line strainer is approx. 1/4" shorter than Apollo / Conbraco.
** FRC54A & 44A.
*** FRC76A, 66A & FRC90A, 80A.

NOTES

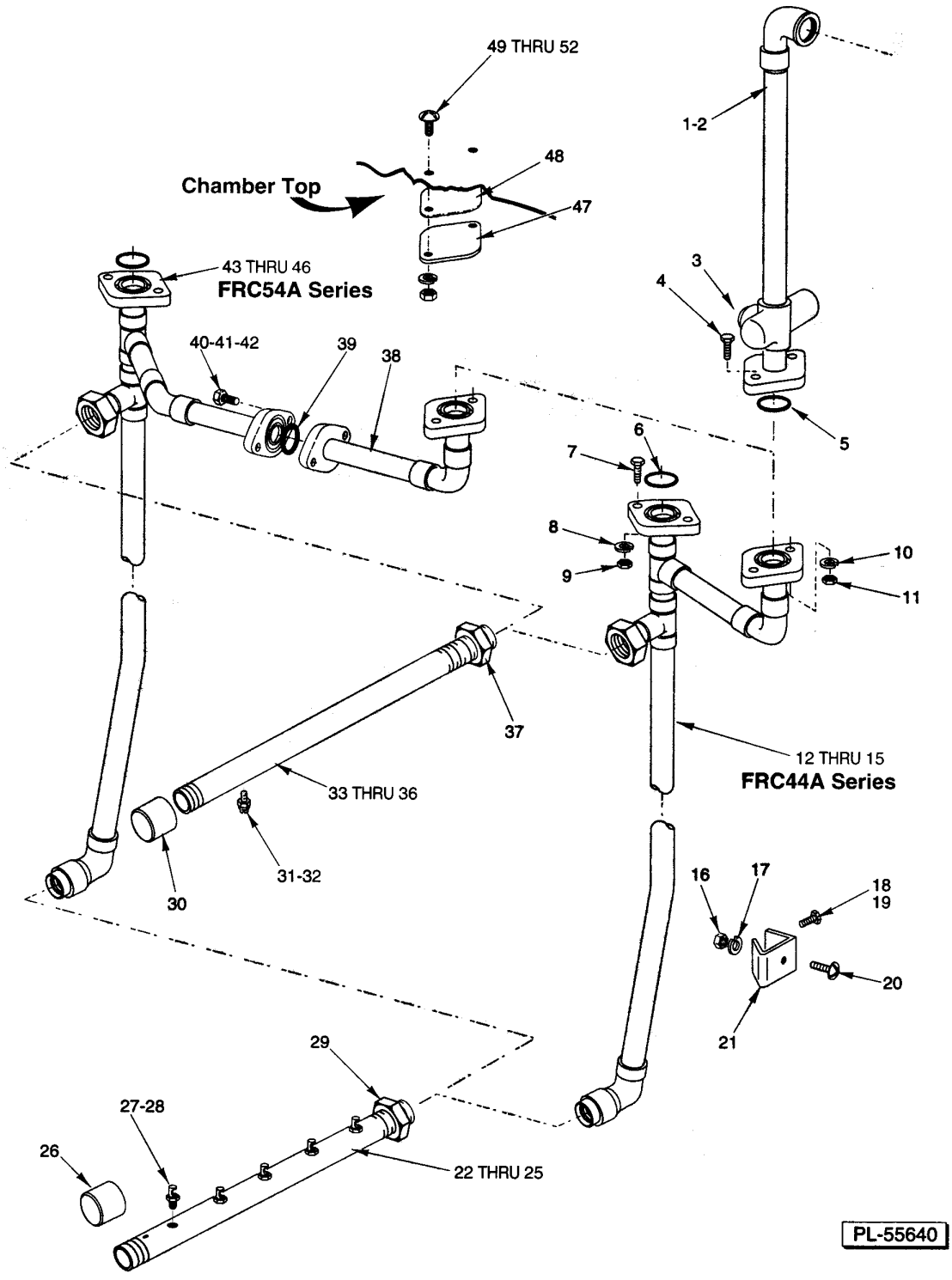

INSIDE METALLIC RINSE PIPING

INSIDE METALLIC RINSE PIPING

INSIDE METALLIC RINSE PIPING

ILLUS. PL-55640	PART NO.	NAME OF PART	AMT.
1	00-271004	Final Rinse Outside Piping (R-L)	1
2	00-329610-00002	Final Rinse Outside Piping (L-R)	1
3	00-119127	Pipe Plug 1/8 Sq. Hd	1
4	SC-041-15	Cap Screw 5/16-18 x 11/4 Hex Hd	2
5	00-067500-00012	O-Ring	2
6	00-067500-00012	O-Ring	1
7	SC-053-18	Mach. Screw 5/16-18 x 7/8 Slotted Truss Hd. (SST)	2
8	WL-006-23	Lockwasher 5/16 Helical (SST)	2
9	NS-015-11	Nut 5/16-18 Hex (SST)	2
10	WL-006-23	Lockwasher 5/16 Helical (SST)	2
11	NS-015-11	Nut 5/16-18 Hex (SST)	2
*12	00-271010-00001	Final Rinse Inside Piping (R-L) (26 1/8 Door Height)	1
*13	00-271010-00002	Final Rinse Inside Piping (L-R) (26 1/8 Door Height)	1
*14	00-274707-00001	Final Rinse Inside Piping (R-L) (32 1/8 Door Height)	1
*15	00-274707-00002	Final Rinse Inside Piping (L-R) (32 1/8 Door Height)	1
16	NS-015-11	Nut 5/16-18 Hex (SST)	1
17	WL-006-23	Lockwasher 5/16 Helical (SST)	1
18	SC-125-28	Mach. Screw 10-24 x 1 Truss Hd. (SST)	1
19	NS-031-16	Stop Nut 10-24 Hex (SST)	1
20	SC-127-93	Mach. Screw 5/16-18 x 1/2 Truss Hd. (SST)	1
21	00-274058	Bracket	1
*22	00-271027-00001	Lower Rinse Arm (R-L) 5 Nozzles (Incls. Items 26, 27, & 29)	1
*23	00-271027-00002	Lower Rinse Arm (L-R) 5 Nozzles (Incls. Items 26, 27, & 29)	1
**24	00-328807-00001	Lower Rinse Arm (R-L) 5 Nozzles (Incls. Items 26, 28, & 29)	1
**25	00-328807-00002	Lower Rinse Arm (L-R) 5 Nozzles (Incls. Items 26, 28, & 29)	1
26	FP-029-08	Pipe Cap 1/2 (Brass)	1
*27	00-022731-00003	Nozzle - Rinse (SST) #50 Drill (0.070 Dia. Orifice)	5
**28	00-022731-00002	Nozzles - Rinse (SST) (0.093 Dia. Orifice)	5
29	FP-030-27	Lock Nut 1/2 NPSL Pipe (Brass)	1
30	FP-029-08	Pipe Cap 1/2 (Brass)	1
*31	00-081812	Nozzle - Rinse (Brass) (0.078 Dia. Orifice)	6
**32	00-081812-00004	Nozzles - Rinse (Brass) (0.094 Dia. Orifice)	6
*33	00-271088-00001	Upper Rinse Arm (R-L) 6 Nozzles (Incls. Items 30, 31, & 37)	1
*34	00-271088-00002	Upper Rinse Arm (L-R) 6 Nozzles (Incls. Items 30, 31, & 37)	1
**35	00-328808-00001	Upper Rinse Arm (R-L) 6 Nozzles (Incls. Items 30, 32, & 37)	1
**36	00-328808-00002	Upper Rinse Arm (L-R) 6 Nozzles (Incls. Items 30, 32, & 37)	1
37	FP-030-27	Lock Nut 1/2 NPSL Pipe (Brass)	1
**38	00-328806	Connector - Rinse Piping	1
**39	00-067500-00012	O-Ring	2
**40	SC-041-15	Cap Screw 5/16-18 x 11/4 Hex Hd	2
**41	WL-006-23	Lockwasher 5/16 Helical (SST)	2
**42	NS-015-11	Nut 5/16-18 Hex (SST)	2
**43	00-328805-00001	Final Rinse Inside Piping (R-L) (26 1/8 Door Height)	1
**44	00-328805-00002	Final Rinse Inside Piping (L-R) (26 1/8 Door Height)	1
**45	00-328812-00001	Final Rinse Inside Piping (R-L) (32 1/8 Door Height)	1
**46	00-328812-00002	Final Rinse Inside Piping (L-R) (32 1/8 Door Height)	1
**47	00-122402-00002	Flange	1
**48	00-276407	Gasket - Rinse Pipe	1
**49	SC-127-94	Mach. Screw 5/16-18 x 7/8 Truss Hd. (SST)	2
**50	WS-029-05	Washer 0.328 x 0.750 x 0.062 (SST)	2
**51	WL-006-23	Lockwasher 5/16 Helical (SST)	2
**52	NS-015-11	Nut 5/16-18 Hex (SST)	2

* FRC44A Series.
** FRC54A Series.

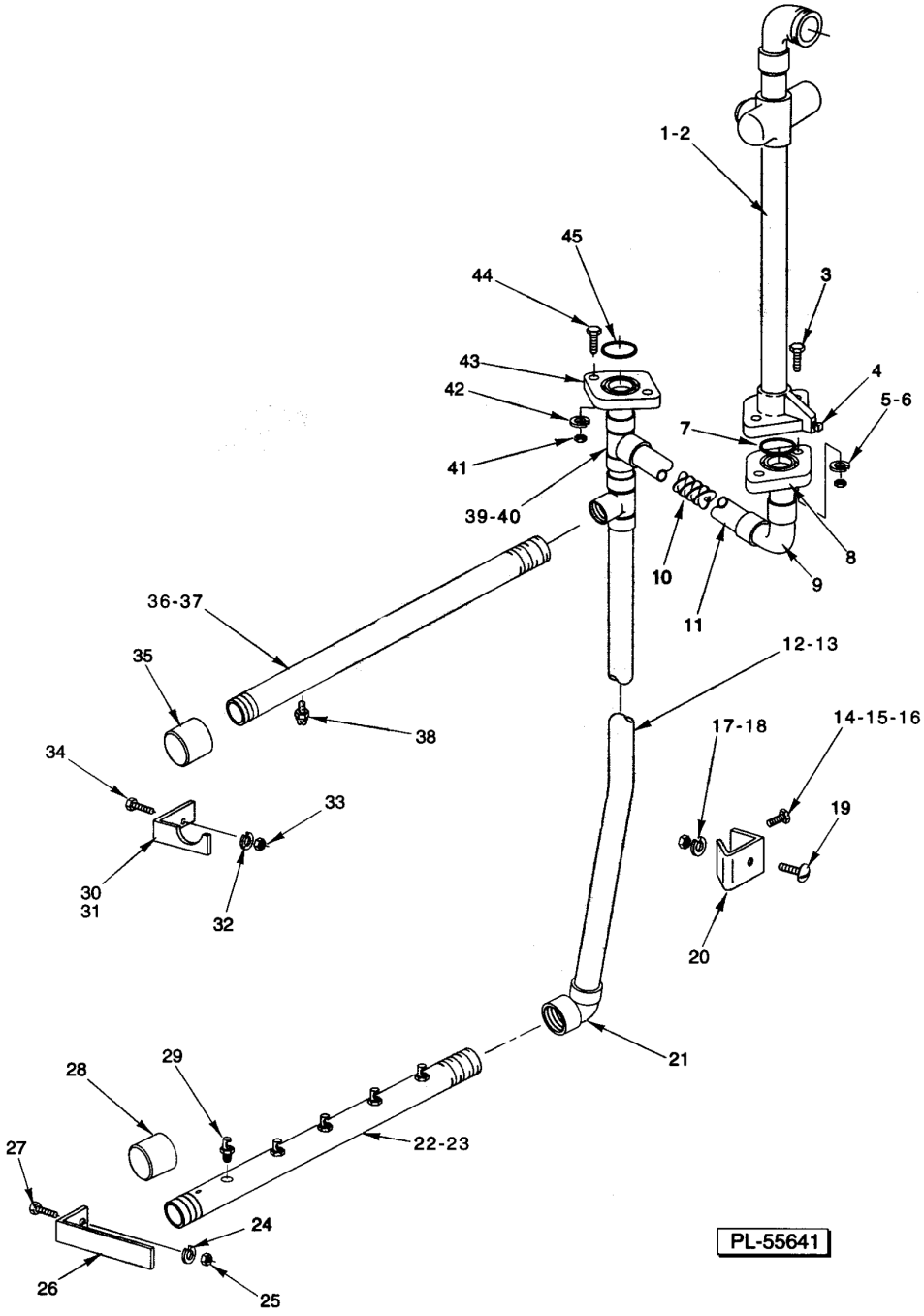

INSIDE NON-METALLIC RINSE PIPING
(FRC44A SERIES)

INSIDE NON-METALLIC RINSE PIPING
(FRC44A SERIES)

INSIDE NON-METALLIC RINSE PIPING
(FRC44A SERIES)

ILLUS. PL-55641	PART NO.	NAME OF PART	AMT.
1	00-329608-00001	Final Outside Rinse Piping (R-L)	1
2	00-329608-00002	Final Outside Rinse Piping (L-R)	1
3	SC-041-15	Cap Screw 5/16-18 x 11/4 Hex Hd	2
4	00-119127	Pipe Plug 1/8 Sq. Hd	2
5	WL-006-23	Lockwasher 5/16 Helical (SST)	2
6	NS-015-11	Nut 5/16-18 Hex (SST)	2
7	00-067500-00012	O-Ring	2
8	00-274533	Flange	1
9	00-185781	Elbow - 1/2 x 90 Deg. (PVC)	1
10	00-435070	Mixer - Spiral	1
11	00-274531-00001	Tube - Inside Rinse (6 1/8 Lg.)	1
12	00-274708	Tube - Inside Rinse (321/8 Door Height)	1
13	00-274536	Tube - Inside Rinse (26 1/8 Door Height)	1
14	SC-053-50	Mach. Screw 10-24 x 11/2 Truss Hd. (SST)	1
15	WL-006-07	Lockwasher #10 Helical (SST)	1
16	NS-011-18	Nut 10-24 Hex (SST)	1
17	NS-015-11	Nut 5/16-18 Hex (SST)	1
18	WL-006-23	Lockwasher 5/16 Helical (SST)	1
19	SC-053-15	Mach. Screw 5/16-18 x 1/2 Slotted Truss Hd. (SST)	1
20	00-274058	Bracket	1
21	00-185781	Elbow - 1/2 x 90 Deg. (PVC)	1
22	00-274534	Lower Rinse Arm (R-L) 5 Nozzles (Incls. Items 28 & 29)	1
23	00-274534-00002	Lower Rinse Arm (L-R) 5 Nozzles (Incls. Items 28 & 29)	1
24	WL-006-16	Lockwasher 1/4 Helical (SST)	2
25	NS-015-01	Nut 1/4-20 Hex (SST)	2
26	00-274570	Bracket	1
27	SC-128-05	Mach. Screw 1/4-20 x 1/2 Fil. Hd. (SST)	2
28	00-276380-00002	Cap - Lower Rinse Arm	1
29	00-022731-00006	Nozzle - Rinse (SST) (0.035 Dia. Orifice)	5
30	00-274532-00001	Bracket (R-L)	1
31	00-274532-00002	Bracket (L-R)	1
32	WL-006-16	Lockwasher 1/4 Helical (SST)	2
33	NS-015-01	Nut 1/4-20 Hex (SST)	2
34	SC-024-06	Mach. Screw 1/4-20 x 1/2 Slotted Fil. Hd. (SST)	2
35	00-276380-00002	Cap - Lower Rinse Arm	1
36	00-274535	Upper Rinse Arm (R-L) 6 Nozzles (Incls. Items 35 & 38)	1
37	00-274535-00002	Upper Rinse Arm (L-R) 6 Nozzles (Incls. Items 35 & 38)	1
38	00-081812-00002	Nozzle - Rinse (SST) (0.078 Dia. Orifice)	6
39	FP-085-51	Tee 1/2 x 1/2 x 1/2 NPT Schedule 80 (PVC)	2
40	00-274531-00002	Tube (1 1/4 Lg.)	1
41	NS-015-11	Nut 5/16-18 Hex (SST)	2
42	WL-006-23	Lockwasher 5/16 Helical (SST)	2
43	00-274533	Flange	1
44	SC-053-18	Mach. Screw 5/16-18 x 7/8 Slotted Truss Hd. (SST)	2
45	00-067500-00012	O-Ring	1

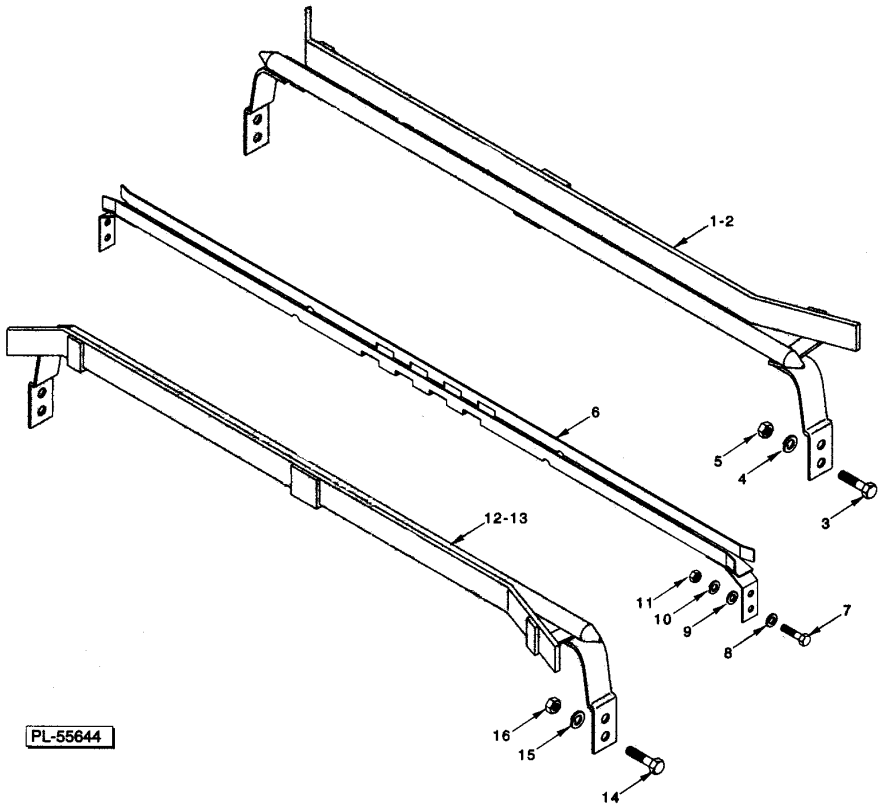

TRACK AND CHAIN GUIDE

TRACK AND CHAIN GUIDE

TRACK AND CHAIN GUIDE

ILLUS. PL-55644	PART NO.	NAME OF PART	AMT.
1	00-812918-00001	NLA - Obsolete--Track Weldment (L-R Front)	1
2	00-812918-00001	NLA - Obsolete--Track Weldment (L-R Front)	1
3	SC-041-11	Cap Screw 5/16-18 x 3/4 Hex Hd. (SST)	4
4	WL-006-23	Lockwasher 5/16 Regular (SST)	4
5	NS-015-11	Nut 5/16-18 (SST)	4
6	00-274745-00001	Guide - Chain	1
7	SC-041-30	Cap Screw 3/8-16 x 1 Hex Hd. (SST)	4
8	WS-006-27	Washer (SST)	4
9	WS-006-27	Washer (SST)	4
10	WL-006-27	Lockwasher 3/8 Light (SST)	4
11	NS-015-13	Nut 3/8-16 (SST)	4
12	00-812918-00002	NLA - Obsolete--Track Weldment (L-R Rear)	1
13	00-812918-00002	NLA - Obsolete--Track Weldment (L-R Rear)	1
14	SC-041-11	Cap Screw 5/16-18 x 3/4 Hex Hd. (SST)	4
15	WL-006-23	Lockwasher 5/16 Regular (SST)	4
16	NS-015-11	Nut 5/16-18 (SST)	4

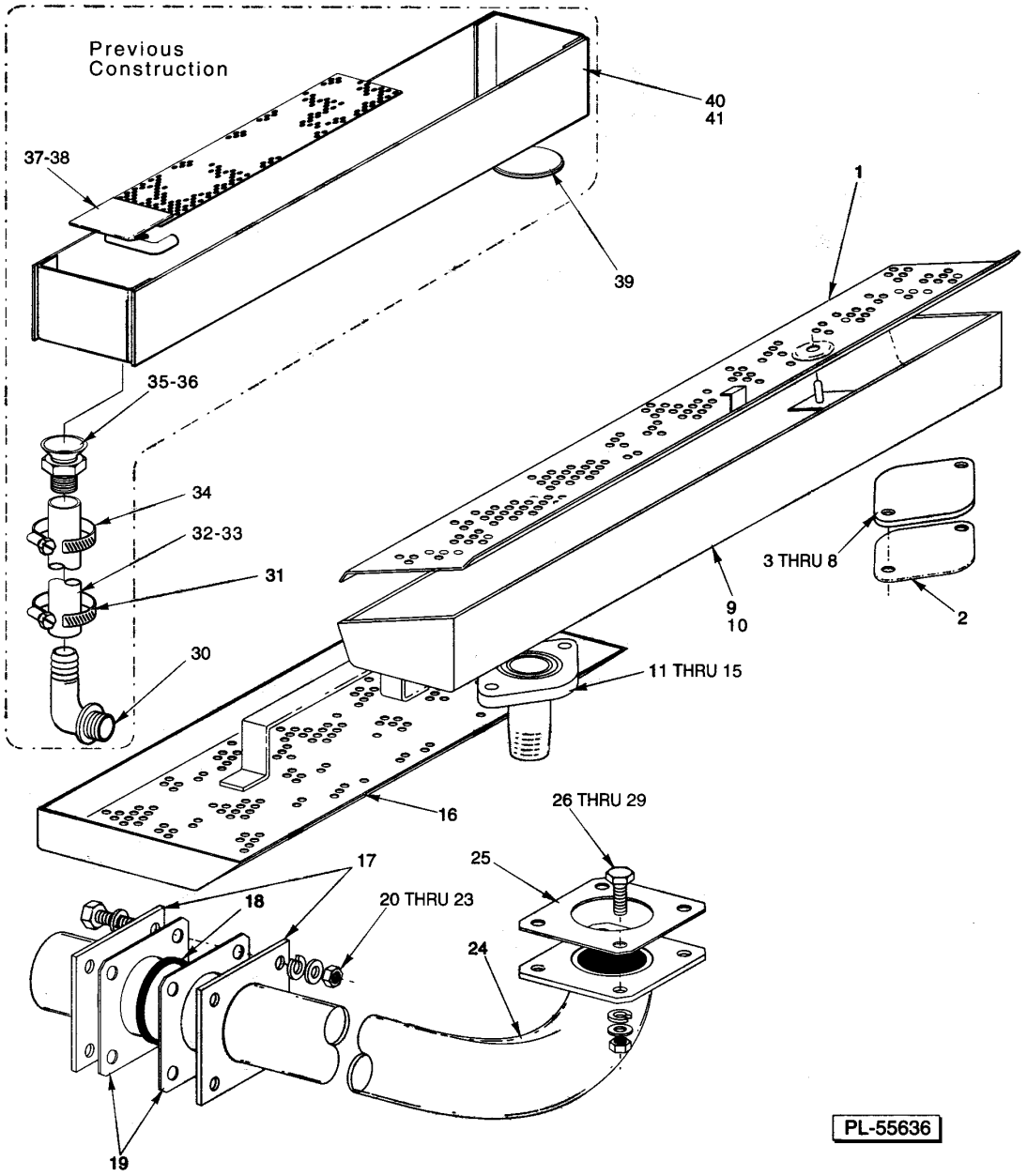

RINSE DRAIN-OFF PAN

RINSE DRAIN-OFF PAN

RINSE DRAIN-OFF PAN

ILLUS. PL-55636	PART NO.	NAME OF PART	AMT.
1	00-812922-00001	Strainer	1
2	00-276407	Gasket - Rinse Pipe	1
3	00-122402-00002	Flange	1
4	SC-041-12	Cap Screw 5/16-18 x 7/8 Hex Hd. (SST)	2
5	WS-029-05	Washer 0.328 x 0.750 x 0.062 (SST)	2
6	WL-006-23	Lockwasher 5/16 Helical (SST)	2
7	NS-015-11	Nut 5/16-18 Hex (SST)	2
8	00-545595	Sealer (1/8 Rd.)	AR
9	00-436828-00002	Rinse Pan Assy. (R-L)	1
10	00-436828-00001	Rinse Pan Assy. (L-R)	1
11	00-328326	Flange & Nipple Assy. (3/4 In.)	1
12	00-475056	Flange & Nipple Assy. (1 In.)	1
13	00-436827	Gasket	1
14	WL-006-23	Lockwasher 5/16 Helical (SST)	2
15	NS-015-11	Nut 5/16-18 Hex (SST)	2
16	00-328803	Pan Rinse (FRC54A)	2
17	00-120115	Retainer - Seal	2
18	00-077621-00002	Ring - Sealing	1
19	00-120603	Gasket - Seal Retainer	2
20	NS-015-11	Nut 5/16-18 Hex (SST)	4
21	SC-041-15	Cap Screw 5/16-18 x 11/4 Hex Hd	4
22	WS-017-08	Washer (0.328 x 0.625 x 0.062) (SST)	8
23	WL-006-23	Lockwasher 5/16 Helical (SST)	4
24	00-328798	Flowback Pipe (FRC54A)	1
25	00-120603	Gasket - Seal Retainer	1
26	SC-041-11	Cap Screw 5/16-18 x 3/4 Hex Hd. (SST)	4
27	WS-017-08	Washer (0.328 x 0.625 x 0.062) (SST)	8
28	WL-006-23	Lockwasher 5/16 Helical (SST)	4
29	NS-015-11	Nut 5/16-18 Hex (SST)	4
30	FP-085-06	Elbow 3/4 Hose Male to 3/4 Male Pipe Thd. (PVC)	1
31	00-534177	Clamp - Hose #12	1
32	00-271013-00002	Hose - Drain (L-R)	1
33	00-271013-00001	Hose - Drain (R-L)	1
34	00-534177	Clamp - Hose #12	1
35	00-270948	Final Rinse Fitting	1
36	00-270949	Spacer - Final Rinse Fitting	1
37	00-271077	Strainer (L-R)	1
38	00-274258	Strainer (R-L)	1
39	FE-024-31	Cover - Electric Box	1
40	00-274256	Rinse Pan Assy. (R-L)	1
41	00-271843	Rinse Pan Assy. (L-R)	1

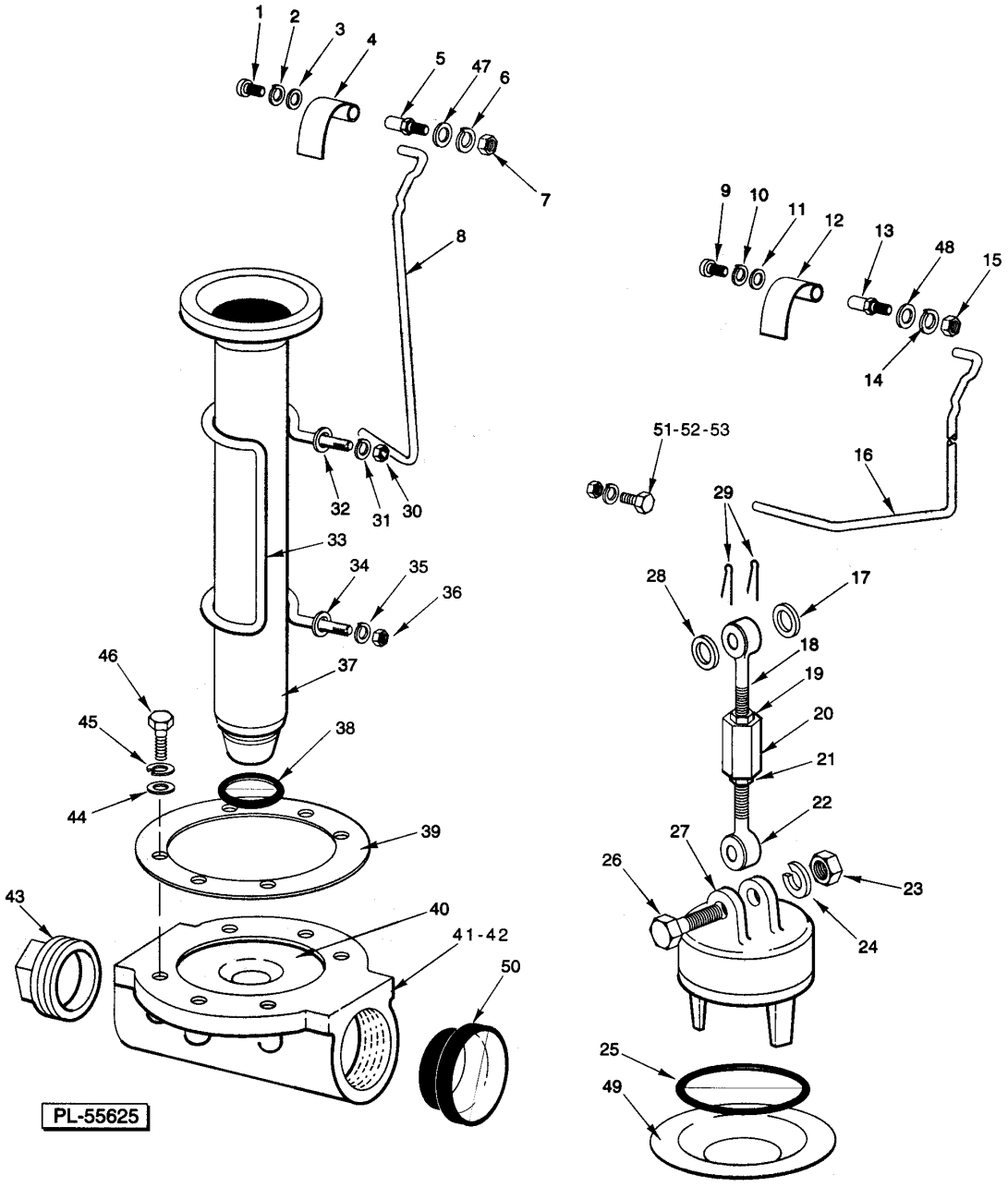

DRAIN UNIT
(WASH SECTION)

DRAIN UNIT
(WASH SECTION)

DRAIN UNIT
(WASH SECTION)

ILLUS. PL-55625	PART NO.	NAME OF PART	AMT.
1	SC-021-22	Mach. Screw 10-24 x 3/8 Slotted Rd. Hd. (SST)	1
2	WL-006-07	Lockwasher #10 Helical (SST)	1
3	WS-023-34	Washer (SST)	1
4	00-271070	Drain Lever	1
5	00-119116	Axle - Drain Lever	1
6	WL-006-17	Lockwasher 1/4 Helical (SST)	1
7	NS-015-01	Nut 1/4-20 Hex (SST)	1
8	00-270953	Lift Rod Overflow	1
*9	SC-021-22	Mach. Screw 10-24 x 3/8 Slotted Rd. Hd. (SST)	1
*10	WL-006-07	Lockwasher #10 Helical (SST)	1
*11	WS-023-34	Washer (SST)	1
*12	00-271070	Drain Lever (L-R)	1
*13	00-119116	Axle - Drain Lever	1
*14	WL-006-17	Lockwasher 1/4 Helical (SST)	1
*15	NS-015-01	Nut 1/4-20 Hex (SST)	1
*16	00-274147	Lift Rod - Drain	1
*17	WS-017-08	Washer (0.328 x 0.625 x 0.062) (SST)	1
*18	00-079410	Pull Rod Assy. - Upper	1
*19	NS-018-06	Jam Nut 5/16-18 Hex (SST)	1
*20	00-016269	Nut - Pull Rod Adjustor	1
*21	NS-018-06	Jam Nut 5/16-18 Hex (SST)	1
*22	00-289519	Pull Rod Assy. - Lower	1
*23	NS-015-11	Nut 5/16-18 Hex (SST)	1
*24	WL-006-23	Lockwasher 5/16 Helical (SST)	1
*25	00-067500-00118	O-Ring	1
*26	SC-041-17	Cap Screw 5/16-18 x 11/2 Hex Hd. (SST)	1
*27	00-077466	Plug - Drain	1
*28	WS-017-08	Washer (0.328 x 0.625 x 0.062) (SST)	1
*29	PC-005-02	Cotter Pin 1/16 x 1/2 (SST)	2
30	NS-015-11	Nut 5/16-18 Hex (SST)	2
31	WL-006-23	Lockwasher 5/16 Helical (SST)	1
32	WS-017-01	Washer 0.328 x 0.875 x 0.062 (SST)	2
33	00-270952	Retainer	1
34	WS-017-01	Washer 0.328 x 0.875 x 0.062 (SST)	2
35	WL-006-23	Lockwasher 5/16 Helical (SST)	1
36	NS-015-11	Nut 5/16-18 Hex (SST)	2
37	00-119099-00002	Tube - Overflow	1
38	00-067500-00120	O-Ring	1
39	00-289464	Gasket - Drain	1
40	00-270947	Sleeve - Drain Body	1
41	00-289465	Drain Body	1
42	00-270946	Drain Body (With 3/4-14 FPT Port on Side)	1
43	FP-028-32	Pipe Plug 2 Sq. Hd	1
44	WS-006-44	Washer (SST)	6
45	WL-006-28	Lockwasher 3/8 Helical (SST)	6
46	SC-041-30	Cap Screw 3/8-16 x 1 Hex Hd. (SST)	6
47	WS-022-01	Washer (SST)	1
*48	WS-022-01	Washer (SST)	1
*49	00-106283	Sleeve - Drain Valve Body	1
50	00-328813	Bushing - Drain	1
*51	SC-041-10	Cap Screw 5/16-18 x 5/8 Hex Hd. (SST)	2
*52	WL-006-23	Lockwasher 5/16 Helical (SST)	2
*53	NS-015-11	Nut 5/16-18 Hex (SST)	2

* Use in wash on machines with RS or PW.

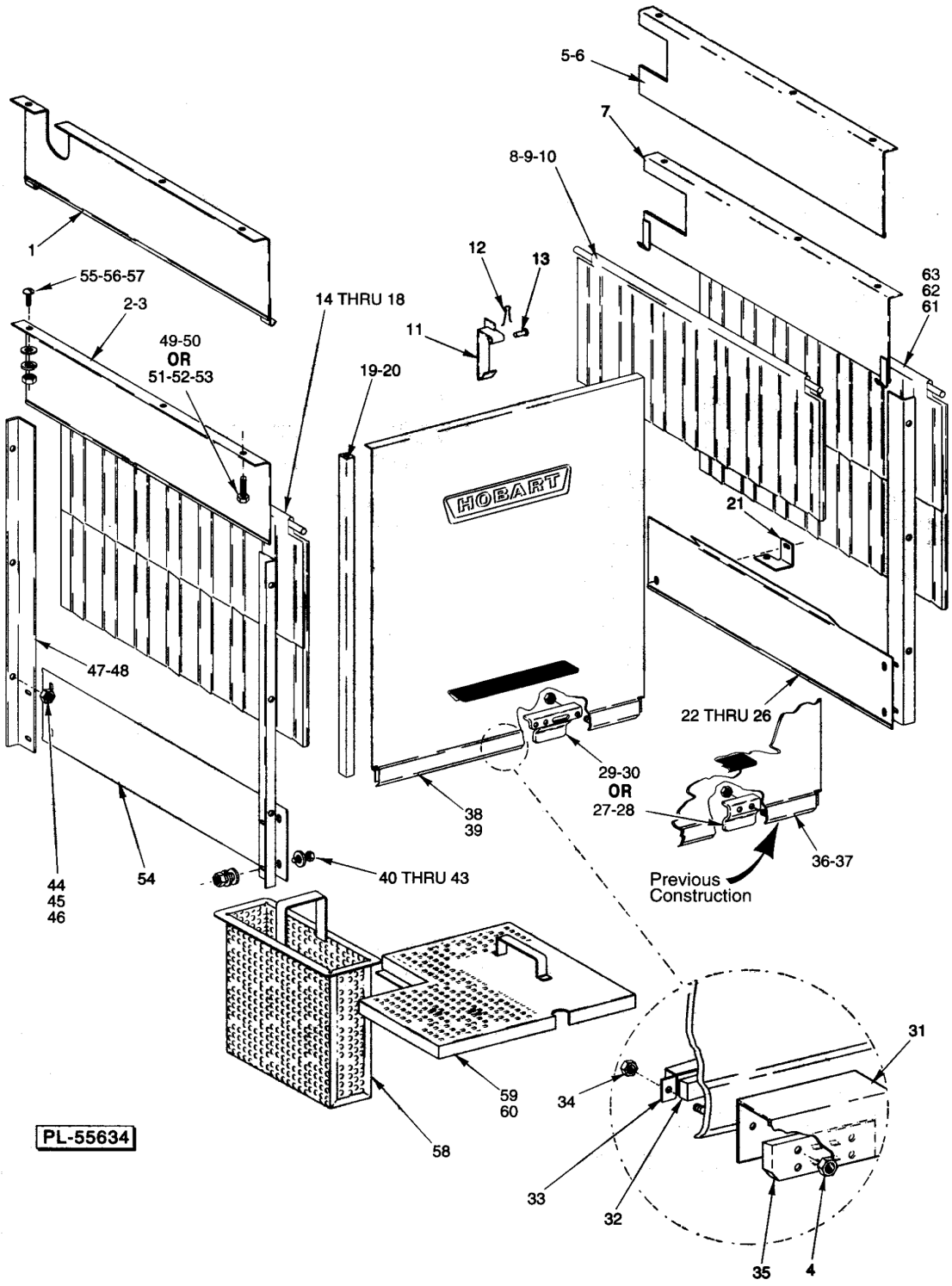

DOOR, CURTAIN, BAFFLES, AND STRAINERS

DOOR, CURTAIN, BAFFLES AND STRAINERS

DOOR, CURTAIN, BAFFLES AND STRAINERS

ILLUS. PL-55634	PART NO.	NAME OF PART	AMT.
1	00-271043-00001	Baffle - Unloading (R-L)	1
2	00-271048	Baffle - Loading (L-R Steam or Electric Heat, FRC44A Series)	1
3	00-271048-00002	Baffle - Loading (L-R Gas Heat, FRC44A Series) (L-R, FRC54A Series)	1
4	NS-031-50	Stop Nut 6-32 Hex (SST)	2
5	00-271046	Baffle - Loading (R-L Steam or Electric Heat, FRC44A Series)	1
6	00-271046-00002	Baffle - Loading (R-L Gas Heat, FRC44A Series) (R-L, FRC54A Series)	1
7	00-271047-00001	Baffle - Unloading (L-R)	1
8	00-120151-00001	Splash Curtain (10-C1)	AR
9	00-120151-00001	Splash Curtain (10-C1) (Gas Heat, FRC44A Series or All Heats, FRC54A Series)	1
10	00-120266-00001	Curtain Rod	AR
11	00-185864	Catch - Door	1
12	PC-005-02	Cotter Pin 1/16 x 1/2 (SST)	1
13	00-012114	Pin	1
14	00-271084	Splash Curtain (261/8 Door Height)	2
15	00-271084-00002	Splash Curtain (32-1/8 Door Height)	2
16	00-120266-00001	Curtain Rod	2
17	00-120152-00055	Splash Curtain Assy. (26-1/8 Door Height)	AR
18	00-120152-00056	Splash Curtain Assy. (32-1/8 Door Height)	AR
19	00-112378-00049	Door Slide (26-1/8 Door Height)	2
20	00-112378-00050	Door Slide (32-1/8 Door Height)	2
21	00-271834	Bracket	1
22	00-271833	Baffle - RH Lower (L-R Operation)	1
23	SC-041-05	Cap Screw 1/4-20 x 5/8 Hex Hd. (SST)	3
24	WL-006-17	Lockwasher 1/4 Helical (SST)	3
25	WS-017-06	Washer (SST)	6
26	NS-015-01	Nut 1/4-20 Hex (SST)	3
27	00-328065	Actuator - Lift Drain	1
28	NS-031-21	Stop Nut 1/4-20 Hex (SST)	2
29	00-328065	Actuator - Lift Drain	1
30	NS-031-21	Stop Nut 1/4-20 Hex (SST)	2
31	00-270996	Insulator - Switch	1
32	00-290160	Magnet	1
33	00-290159	Retainer - Magnet	1
34	NS-031-50	Stop Nut 6-32 Hex (SST)	2
35	00-892896	Kit - Service Reed Switch	1
*36		Door (261/8)	1
*37		Door (321/8)	1
38	00-328064-00007	Door (26-1/8)	1
39	00-328079-00007	Door (32-1/8)	1
40	SC-041-05	Cap Screw 1/4-20 x 5/8 Hex Hd. (SST)	4
41	WS-017-06	Washer (SST)	8
42	WL-006-17	Lockwasher 1/4 Helical (SST)	4
43	NS-015-01	Nut 1/4-20 Hex (SST)	4
44	WS-022-01	Washer (SST)	9
45	WL-006-17	Lockwasher 1/4 Helical (SST)	9
46	NS-015-01	Nut 1/4-20 Hex (SST)	9
47	00-271049-00001	Baffle - Vertical (261/8 Door Height)	3
48	00-274720-00001	Baffle - Vertical (321/8 Door Height)	3
49	WL-006-17	Lockwasher 1/4 Helical (SST)	4
50	SC-041-50	Cap Screw 1/4-20 x 1/2 Hex Hd. (SST)	4
51	WS-022-01	Washer (SST)	4
52	WL-006-17	Lockwasher 1/4 Helical (SST)	4
53	NS-015-01	Nut 1/4-20 Hex (SST)	4
54	00-271832	Baffle - LH Lower	1
55	SC-053-41	Mach. Screw 1/4-20 x 1/2 Slotted Truss Hd. (SST)	2

DOOR, CURTAIN, BAFFLES AND STRAINERS

ILLUS. PL-55634	PART NO.	NAME OF PART	AMT.
56	WL-006-17	Lockwasher 1/4 Helical (SST)	2
57	NS-015-01	Nut 1/4-20 Hex (SST)	2
58	00-271878	Bucket - Strainer	1
59	00-271845	Strainer - Front	1
60	00-271847	Strainer - Rear (Not Shown)	1
61	00-271084	Splash Curtain (261/8 Door Height) (FRC54A)	1
62	00-271084-00002	Splash Curtain (321/8 Door Height) (FRC54A)	1
63	00-120266-00001	Curtain Rod	1

* No longer available. Order either item 38 or 39 & item 29 to convert to present style.

NOTES

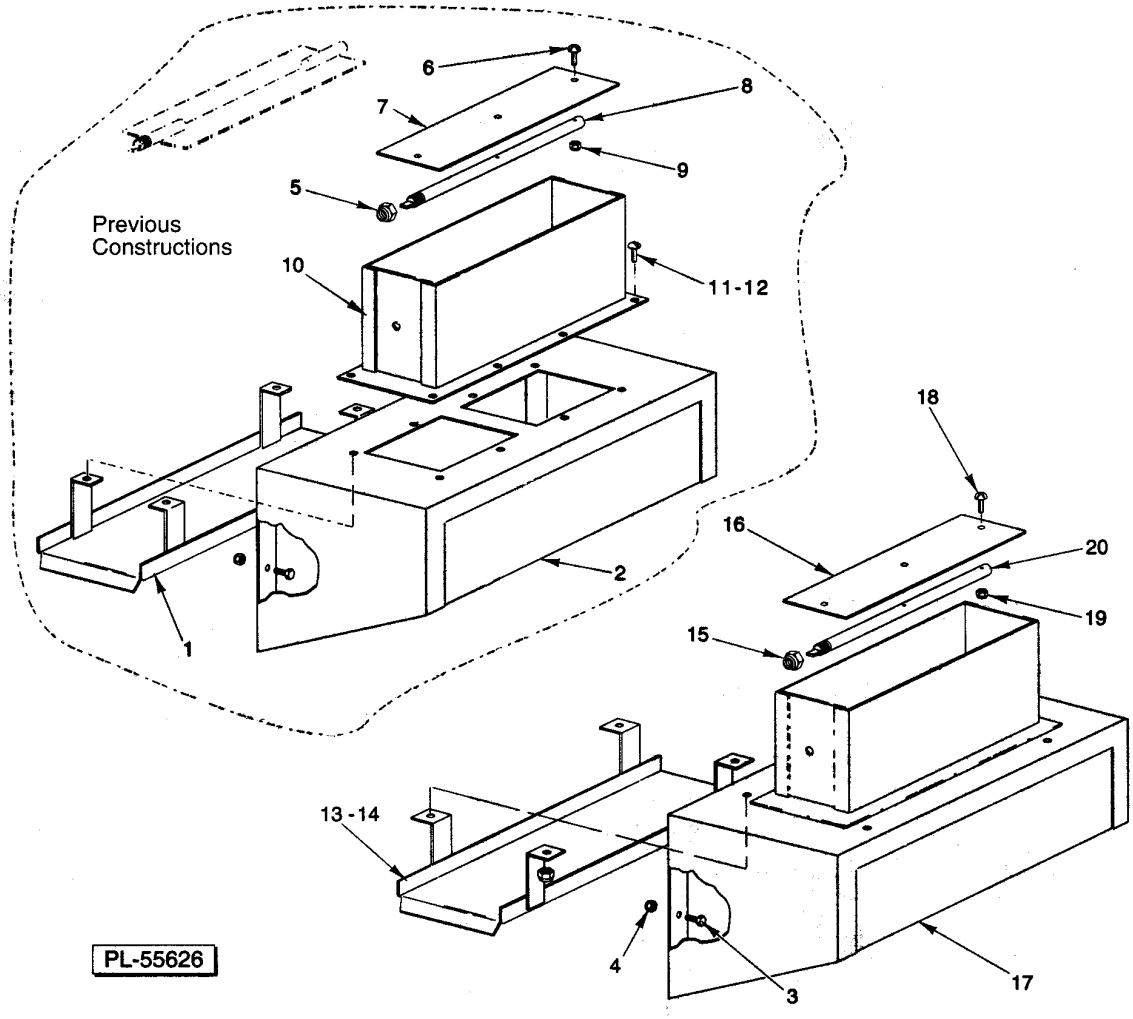

VENT HOOD

VENT HOOD

VENT HOOD

ILLUS. PL-55626	PART NO.	NAME OF PART	AMT.
1	00-080553	Drip Shield Assy	1
2	00-079467-00002	Vent Hood Assy	1
3	SC-041-05	Cap Screw 1/4-20 x 5/8 Hex Hd. (SST)	11
4	NS-031-19	Stop Nut 1/4-20 Elastic (SST)	11
5	NS-036-12	Stop Nut 3/8-24 Hex Special (SST)	1
6	SC-125-25	Mach. Screw 6-32 x 3/4 Phil. Rd. Hd. (SST)	3
7	00-075623	Damper - Vent Stack	1
8	00-064919	Shaft - Damper	1
9	NS-031-50	Stop Nut 6-32 Hex (SST)	3
10	00-075621	Vent Stack Assy	1
11	SC-053-02	Mach. Screw 10-24 x 1/2 Slotted Truss Hd. (SST)	8
12	NS-031-15	Stop Nut 10-24 Hex (SST)	8
13	00-435799	Drip Shield Assy	1
14	NS-031-15	Stop Nut 10-24 Hex (SST)	4
15	NS-036-12	Stop Nut 3/8-24 Hex Special (SST)	1
16	00-075623	Damper - Vent Stack	1
17	00-435794-00001	Vent Hood Assy. (Incls. Items 13 thru 16, 18, 19, & 20)	1
18	SC-125-25	Mach. Screw 6-32 x 3/4 Phil. Rd. Hd. (SST)	3
19	NS-031-50	Stop Nut 6-32 Hex (SST)	3
20	00-064919	Shaft - Damper	1

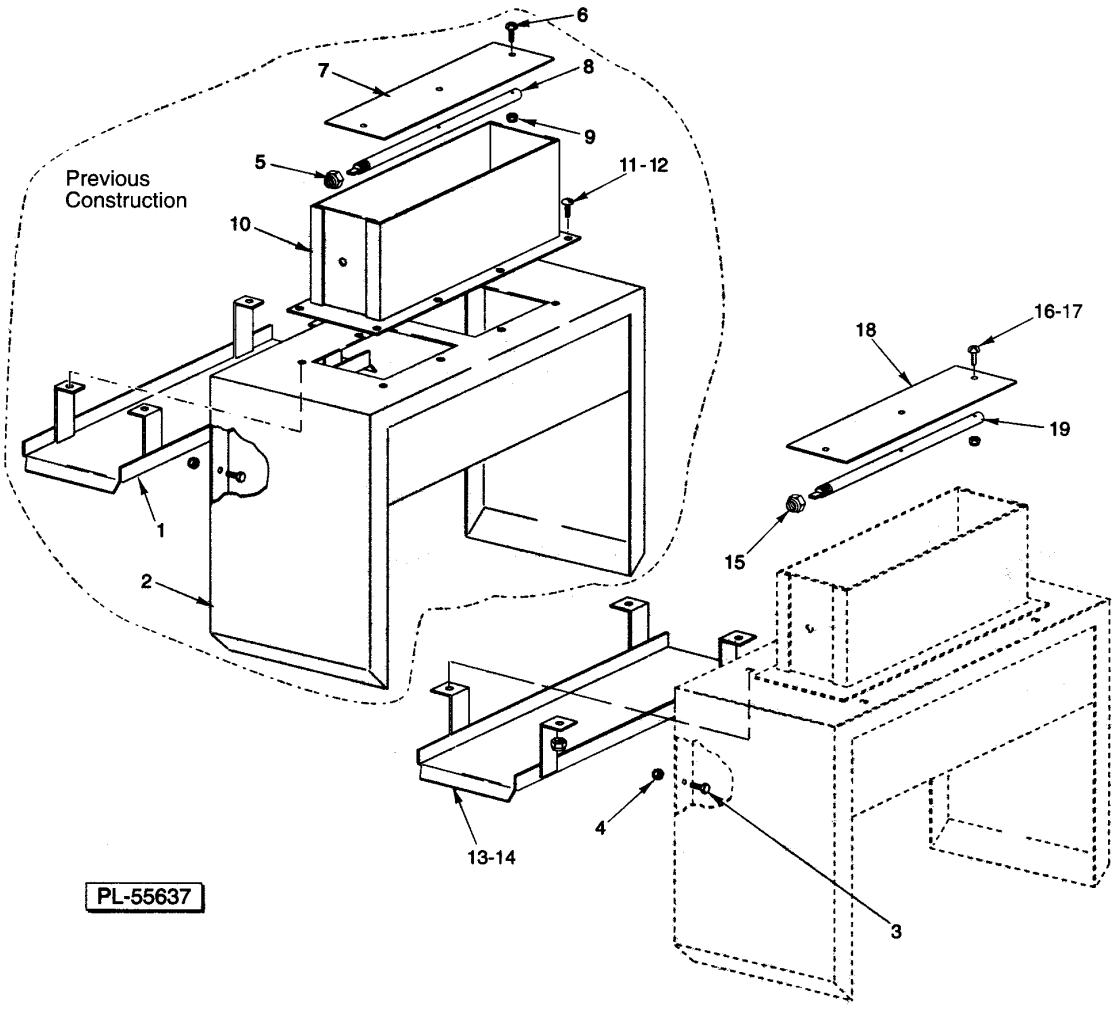

EXTENDED HOOD

EXTENDED HOOD

EXTENDED HOOD

ILLUS. PL-55637	PART NO.	NAME OF PART	AMT.
1	00-080553	Drip Shield Assy	1
2	00-079463-00002	Extended Hood Assy	1
3	SC-041-05	Cap Screw 1/4-20 x 5/8 Hex Hd. (SST)	13
4	NS-031-19	Stop Nut 1/4-20 Elastic (SST)	13
5	NS-036-12	Stop Nut 3/8-24 Hex Special (SST)	1
6	SC-125-25	Mach. Screw 6-32 x 3/4 Phil. Rd. Hd. (SST)	3
7	00-075623	Damper - Vent Stack	1
8	00-064919	Shaft - Damper	1
9	NS-031-50	Stop Nut 6-32 Hex (SST)	3
10	00-075621	Vent Stack Assy	1
11	SC-053-02	Mach. Screw 10-24 x 1/2 Slotted Truss Hd. (SST)	8
12	NS-031-15	Stop Nut 10-24 Hex (SST)	8
13	00-435799	Drip Shield Assy	1
14	NS-031-15	Stop Nut 10-24 Hex (SST)	4
15	NS-036-12	Stop Nut 3/8-24 Hex Special (SST)	1
16	SC-125-25	Mach. Screw 6-32 x 3/4 Phil. Rd. Hd. (SST)	3
17	NS-031-50	Stop Nut 6-32 Hex (SST)	3
18	00-075623	Damper - Vent Stack	1
19	00-064919	Shaft - Damper	1

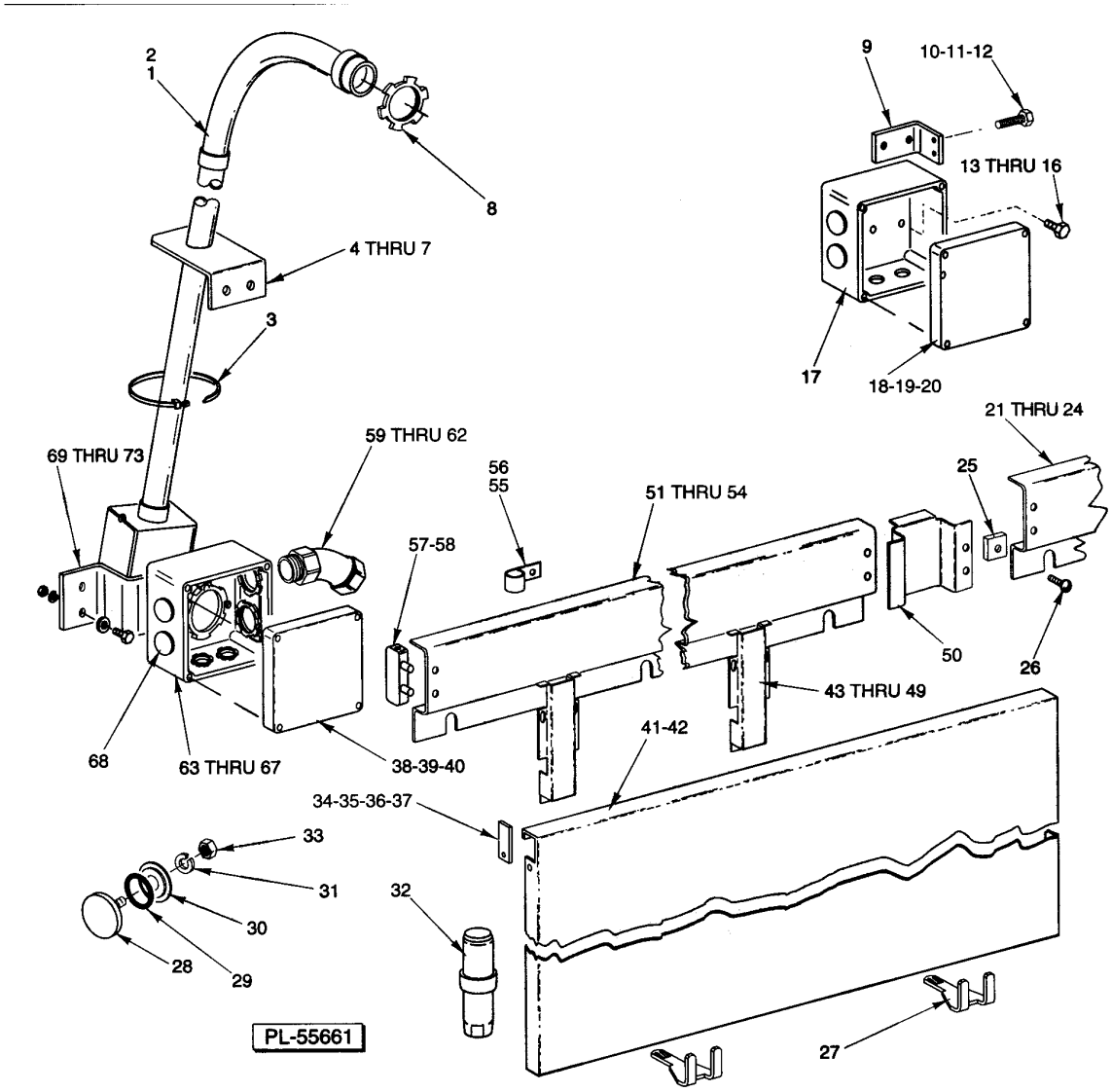

MISCELLANEOUS
(WASH SECTION)

MISCELLANEOUS
(WASH SECTION)

MISCELLANEOUS
(WASH SECTION)

ILLUS. PL-55661	PART NO.	NAME OF PART	AMT.
1	00-274232	Conduit - PVC (261/8 Door Height) (Incls. Item 4)	1
2	00-274709	Conduit - PVC (321/8 Door Height) (Incls. Item 4)	AR
3	00-122577-00002	Wire Tie	2
4	00-271044	Bracket	2
5	SC-041-50	Cap Screw 1/4-20 x 1/2 Hex Hd. (SST)	1
6	WL-006-17	Lockwasher 1/4 Helical (SST)	2
7	NS-015-01	Nut 1/4-20 Hex (SST)	2
8	FE-009-07	Lock Nut 11/4	2
9	00-270925	Bracket (RH)	1
10	SC-041-12	Cap Screw 5/16-18 x 7/8 Hex Hd. (SST)	2
11	WL-006-23	Lockwasher 5/16 Helical (SST)	2
12	NS-015-11	Nut 5/16-18 Hex (SST)	2
13	SC-041-05	Cap Screw 1/4-20 x 5/8 Hex Hd. (SST)	2
14	WS-003-49	Washer 0.266 x 0.563 x 0.062 (SST)	2
15	WL-006-17	Lockwasher 1/4 Helical (SST)	2
16	NS-015-01	Nut 1/4-20 Hex (SST)	2
17	00-270923-00002	Box - Junction (RH)	1
18	00-288465	Lid & Gasket Assy. (Incls. Item 21)	1
19	00-112007	Gasket	1
20	SD-012-20	Self-Tapping Screw 8-32 x 1/2 Phil. Truss Hd., Type T	4
21	00-328804	Wireway - Horizontal (FRC54A Series)	1
22	WS-017-06	Washer (SST)	2
23	WL-006-17	Lockwasher 1/4 Helical (SST)	2
24	NS-015-01	Nut 1/4-20 Hex (SST)	2
25	00-072937	Speed Nut 4-40	2
26	SC-127-55	Mach. Screw 4-40 x 3/8 Rd. Hd. (SST)	2
27	00-271061	Support	2
28	00-119244	Cap & Stud Assy	1
29	00-067500-00031	O-Ring	1
30	00-119254	Retainer - Cap & Stud	1
31	WL-006-17	Lockwasher 1/4 Helical (SST)	1
32	00-288946-00002	Foot - Adjustable (11/2 to 23/4)	4
33	NS-015-01	Nut 1/4-20 Hex (SST)	1
34	00-436888	Cover - Panel Notch	2
35	SC-066-05	Mach. Screw 10-24 x 3/8 Phil. Truss Hd. (SST)	2
36	WS-019-06	Washer (SST)	2
37	NS-031-16	Stop Nut 10-24 Hex (SST)	2
38	00-288465	Lid & Gasket Assy. (Incls. Item 39)	1
39	00-112007	Gasket	1
40	SD-012-20	Self-Tapping Screw 8-32 x 1/2 Phil. Truss Hd., Type T	4
41	00-436798	Panel - Front Trim (FRC44A)	1
42	00-328809	Panel - Front Trim (FRC54A)	1
43	00-271055	Wireway - Vertical	2
44	SC-114-15	Mach. Screw 10-24 x 3/8 Rd. Hd. (SST)	2
45	WL-006-07	Lockwasher #10 Helical (SST)	2
46	WS-019-06	Washer (SST)	4
47	WL-006-17	Lockwasher 1/4 Helical (SST)	4
48	NS-015-01	Nut 1/4-20 Hex (SST)	4
49	WS-019-19	Washer (SST)	2
50	00-274252	Wire Raceway (FRC54A Series)	2
51	00-271056	Wireway - Horizontal	1
52	WS-017-06	Washer (SST)	3
53	WL-006-17	Lockwasher 1/4 Helical (SST)	3
54	NS-015-01	Nut 1/4-20 Hex (SST)	3
55	NS-047-94	Lock Nut 3/16 Stud Special	AR

MISCELLANEOUS
(WASH SECTION)

ILLUS. PL-55661	PART NO.	NAME OF PART	AMT.
56	00-294677-00003	Clamp - Wire (3/4 I.D.)	AR
57	00-271057	NLA - Obsolete--Cap - Wireway	2
58	SD-007-38	Self-Tapping Screw 8 x 1/4 Phil. Bind Hd., Type B	2
59	FE-008-44	Connector 45 Deg. (3/4 Male Thd. x 3/4 Thinwall)	2
60	FE-008-11	Gasket - Electrical	2
61	FE-006-06	Lock Nut 3/4	2
62	FE-007-32	Connector - Conduit 3/4 TS	2
63	00-270923-00001	Box - Junction (LH)	1
64	SC-041-05	Cap Screw 1/4-20 x 5/8 Hex Hd. (SST)	2
65	WS-003-49	Washer 0.266 x 0.563 x 0.062 (SST)	2
66	WL-006-17	Lockwasher 1/4 Helical (SST)	2
67	NS-015-01	Nut 1/4-20 Hex (SST)	2
68	PB-004-08	Plug Button 7/8 (Heyco #2703)	AR
69	00-270922	Bracket (LH)	1
70	SC-041-12	Cap Screw 5/16-18 x 7/8 Hex Hd. (SST)	2
71	WS-017-08	Washer (0.328 x 0.625 x 0.062) (SST)	2
72	WL-006-23	Lockwasher 5/16 Helical (SST)	2
73	NS-015-11	Nut 5/16-18 Hex (SST)	2

NOTES

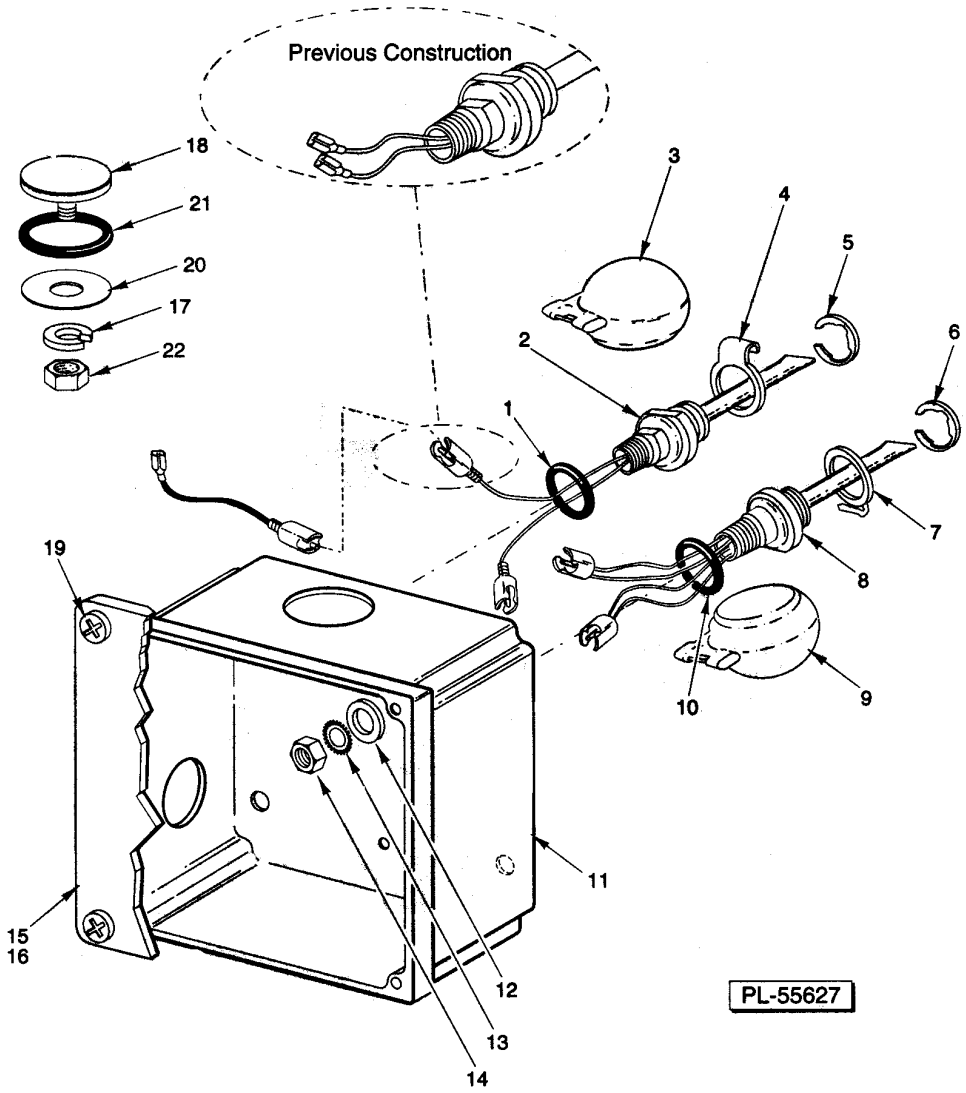

LOW WATER PROTECTION
(STEAM HEAT/WASH TANK)

LOW WATER PROTECTION
(STEAM HEAT/WASH TANK)

LOW WATER PROTECTION
(STEAM HEAT/WASH TANK)

ILLUS. PL-55627	PART NO.	NAME OF PART	AMT.
1	00-067500-00072	O-Ring	AR
*2	00-328495	Probe & Switch Assy. (2 Wire) (Water Level) (Incls. Items 3, 4, & 5)	AR
3	00-122674	Float Assy	AR
4	00-112467	Retainer - Float	AR
5	RR-010-13	Retaining Ring	AR
6	RR-010-13	Retaining Ring	1
7	00-112467	Retainer - Float	1
8	00-186091	Probe & Switch Assy. (4 Wire) (Temperature & Water Level) (Incls. Items 6, 7, & 9)	1
9	00-122674	Float Assy	1
10	00-067500-00072	O-Ring	1
11	00-271112-00001	Box - Steam Heat	1
12	WS-010-40	Washer - Thrust	AR
13	WL-014-31	Lockwasher 1/2 External Shakeproof (SST)	AR
14	NS-018-28	Jam Nut 1/2-20 Hex (SST)	AR
15	00-288465	Lid & Gasket Assy. (Incls. Item 16)	1
16	00-112007	Gasket	1
**17	WL-006-17	Lockwasher 1/4 Helical (SST)	AR
**18	00-119244-00002	Cap & Stud Assembly	AR
19	SD-012-20	Self-Tapping Screw 8-32 x 1/2 Phil. Truss Hd., Type T	4
**20	WS-003-47	Washer (SST)	AR
**21	00-067500-00031	O-Ring	AR
**22	NS-015-01	Nut 1/4-20 Hex (SST)	AR
	00-294357-00001	Housing - Connector (Nat)	AR
	00-294357-00002	Housing - Connector (Black)	AR
	00-065890-00029	Connector - Insulated	AR

* Must order two jumper wires, Part #328758.
** Used on FRC76A, FRC66A, FRC80A, and 90A in place of items 1 thru 5 in wash tank.

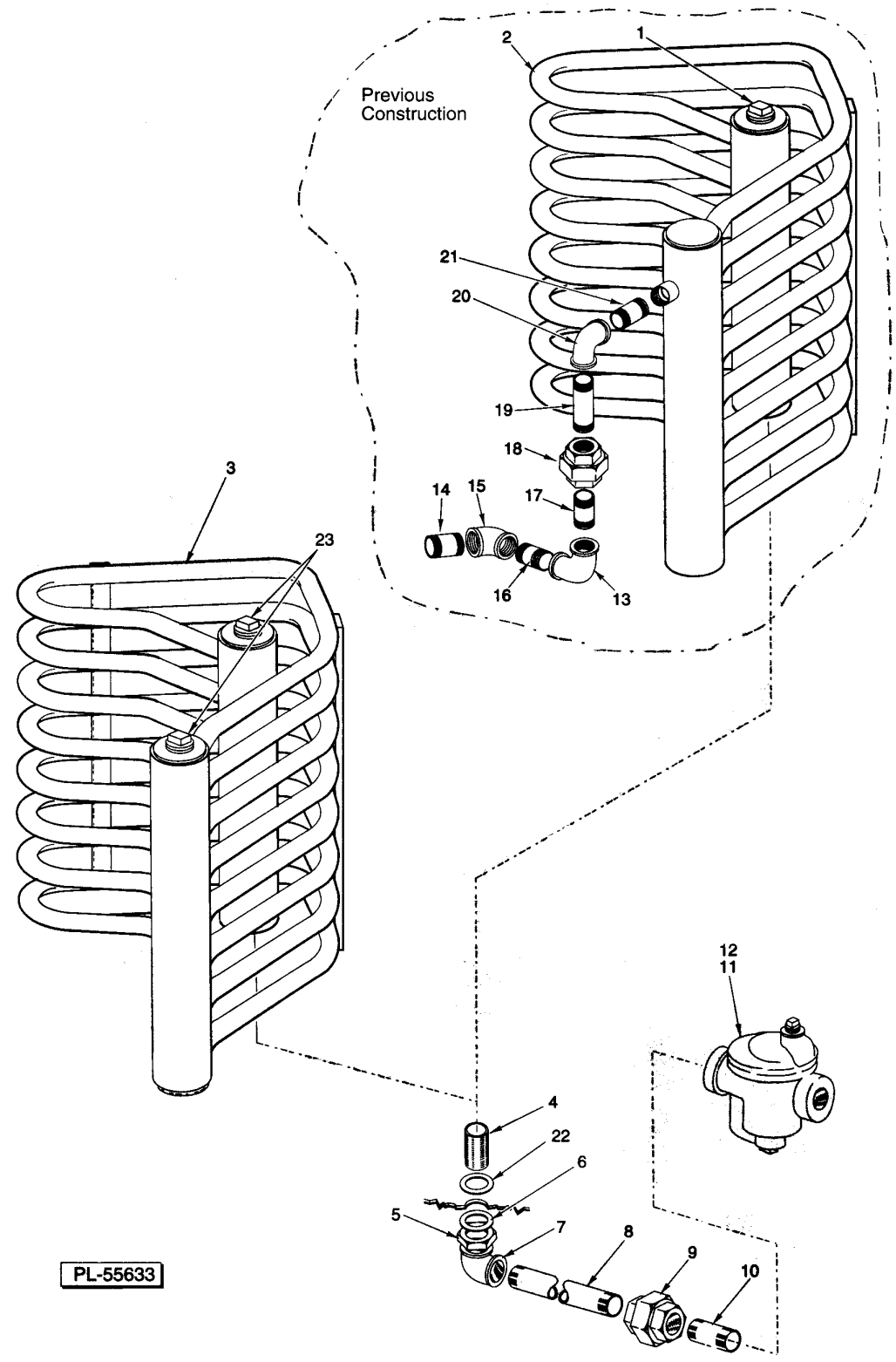

STEAM COIL HEAT

STEAM COIL HEAT

STEAM COIL HEAT

ILLUS. PL-55633	PART NO.	NAME OF PART	AMT.
1	FP-052-09	Pipe Plug 3/4 Sq. Hd. (SST)	1
2	00-274547	Coil - Steam (Side Inlet)	1
3	00-329243	Coil - Steam	1
4	FP-080-17	Pipe 3/4 x 2 (TBE; 11/2 RTOE) (SST)	1
5	FP-053-09	Lock Nut 3/4 NPSL (SST)	1
6	WS-013-45	Washer (SST)	1
7	FP-013-22	Elbow Pipe 3/4 x 90 Deg	1
8	FP-036-12	Pipe 3/4 x 7-3/4 TBE	1
9	FP-022-17	Union 3/4 (Grd. Seat)	1
10	FP-036-92	Pipe 3/4 x 1-3/8 TBE (Black)	1
11	00-118316	Steam Trap (0-20 PSI)	1
12	00-118317	Steam Trap (21-50 PSI)	1
13	FP-049-15	Elbow 3/4 x 90 Deg. (SST)	1
14	FP-054-27	Pipe 3/4 x 1-3/8 TBE (SST)	1
15	FP-077-29	Elbow 3/4 x 45 Deg. (SST)	1
16	FP-054-28	Pipe 3/4 x 1 1/2 TBE (SST)	1
17	FP-054-27	Pipe 3/4 x 1-3/8 TBE (SST)	1
18	FP-050-14	Union 3/4 (Grd. Seat) (SST)	1
19	FP-054-44	Pipe 3/4 x 2-1/2 TBE (SST)	1
20	FP-049-15	Elbow 3/4 x 90 Deg. (SST)	1
21	FP-054-28	Pipe 3/4 x 1 1/2 TBE (SST)	1
22	WS-013-45	Washer (SST)	1
23	FP-052-09	Pipe Plug 3/4 Sq. Hd. (SST)	2

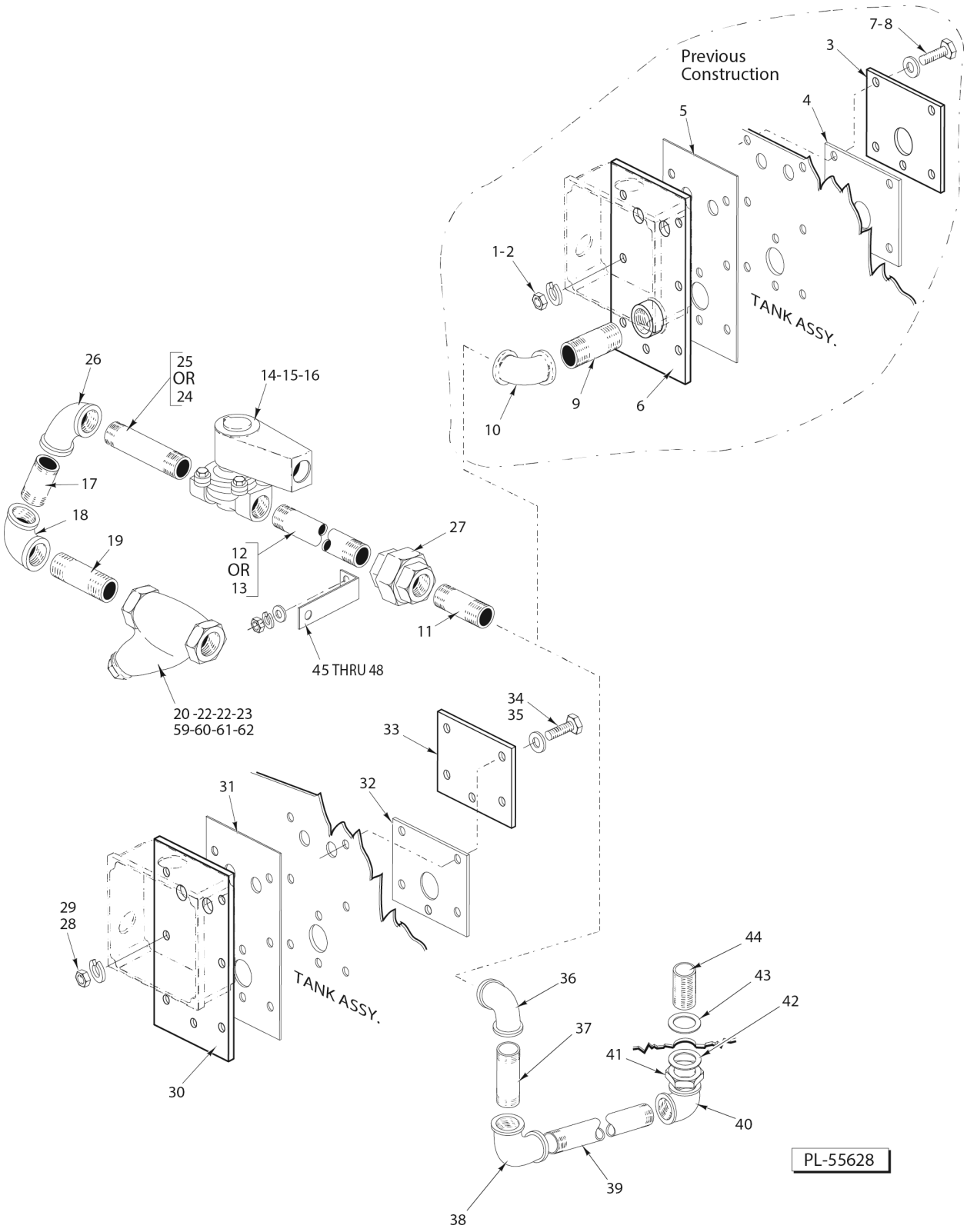

PIPING - STEAM COILS

PIPING - STEAM COILS

ILLUS. PL-55628	PART NO.	NAME OF PART	AMT.
1	NS-015-11	Nut 5/16-18 Hex (SST)	7
2	WL-006-23	Lockwasher 5/16 Helical (SST)	7
3	00-435027	Plate	1
4	00-435026	Gasket	1
5	00-271109	Gasket - Mounting	1
6	00-271108	Plate - Mounting	1
7	WS-017-08	Washer (0.328 x 0.625 x 0.062) (SST)	14
8	SC-041-15	Cap Screw 5/16-18 x 11/4 Hex Hd	7
9	FP-036-92	Pipe 3/4 x 1-3/8 TBE (Black)	1
10	FP-013-22	Elbow Pipe 3/4 x 90 Deg	1
11	FP-036-92	Pipe 3/4 x 1-3/8 TBE (Black)	1
12	FP-036-13	Pipe 3/4 x 73/8 TBE	1
13	FP-036-12	Pipe 3/4 x 73/4 TBE (Used on Side Inlet Construction)	1
14	00-270329-00001	Solenoid Valve (120 V.) (Incls. Items 15 & 16)	1
15	00-270318-00001	Coil - Solenoid Valve (120 V.)	1
16	00-270336	Service Kit - Solenoid Valve	1
17	FP-036-92	Pipe 3/4 x 1-3/8 TBE (Black)	1
18	FP-013-22	Elbow Pipe 3/4 x 90 Deg	1
19	FP-036-92	Pipe 3/4 x 1-3/8 TBE (Black)	1
*20	00-186922	Strainer - Line (3/4 In.) (Brass) (Kitz) (Incls. Items 21 thru 23) (Alternate to Item 49)	1
21	00-186923	Plug - Branch	1
22	00-186924	Gasket - Branch Plug	1
23	00-186925	Screen - Line Strainer	1
24	FP-059-76	Pipe 3/4 x 21/4 TBE (Used on Side Inlet Construction)	1
25	FP-059-22	Pipe 3/4 x 13/4 TBE	1
26	FP-013-22	Elbow Pipe 3/4 x 90 Deg	1
27	FP-022-17	Union 3/4 (Grd. Seat)	1
28	NS-015-11	Nut 5/16-18 Hex (SST)	7
29	WL-006-23	Lockwasher 5/16 Helical (SST)	7
30	00-328776	Plate - Outer	1
31	00-271109	Gasket - Mounting	1
32	00-435026	Gasket	1
33	00-328777	Plate - Inner	1
34	SC-041-15	Cap Screw 5/16-18 x 11/4 Hex Hd	7
35	WS-017-08	Washer (0.328 x 0.625 x 0.062) (SST)	14
36	FP-013-22	Elbow Pipe 3/4 x 90 Deg	1
37	FP-036-05	Pipe 3/4 x 3 TBE	1
38	FP-013-22	Elbow Pipe 3/4 x 90 Deg	1
39	FP-087-48	Pipe 3/4 x 8 TBE	1
40	FP-013-22	Elbow Pipe 3/4 x 90 Deg	1
41	FP-053-09	Lock Nut 3/4 NPSL (SST)	1
42	WS-013-45	Washer (SST)	1
43	WS-013-45	Washer (SST)	1
44	FP-080-17	Pipe 3/4 x 2 (TBE; 11/2 RTOE) (SST)	1
45	00-289721	Bracket - Air Baffle	1
46	WS-003-49	Washer 0.266 x 0.563 x 0.062 (SST)	1
47	WL-006-17	Lockwasher 1/4 Helical (SST)	1
48	NS-015-01	Nut 1/4-20 Hex (SST)	1
*49	00-186922	Strainer - Line (3/4 In.) (Brass) (Apollo / Conbraco) (Incls. Items 50, 51, & 52) (Alternate to Item 20)	1
50	00-749802-00001	Cap	1
51	00-749802-00002	Gasket	1
52	00-749802-00003	Screen (80 Mesh)	1

* Kitz line strainer is approx. 1/4" shorter than Apollo / Conbraco.

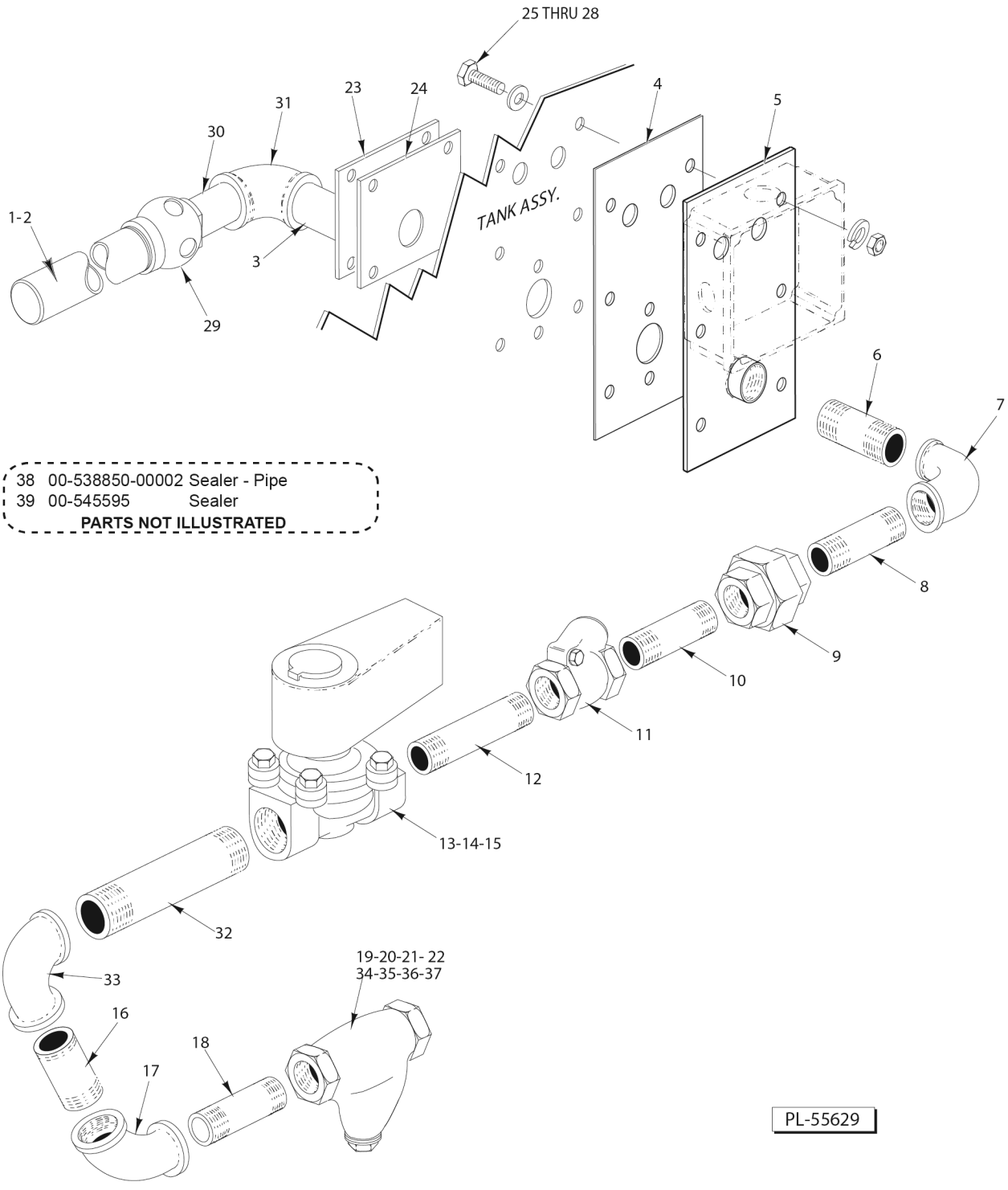

STEAM INJECTOR HEAT

STEAM INJECTOR HEAT

ILLUS. PL-55629	PART NO.	NAME OF PART	AMT.
1	00-271110	Piping - Steam Injector (Incls. Items 2, 31, & 32)	1
2	FP-085-05	Pipe 1 x 10-1/2 STOE (SST)	1
3	FP-054-32	Pipe 3/4 x 43/8 Lg. TBE (SST)	1
4	00-271109	Gasket - Mounting	1
5	00-271108	Plate - Mounting	1
6	FP-036-92	Pipe 3/4 x 1-3/8 TBE (Black)	1
7	FP-013-22	Elbow Pipe 3/4 x 90 Deg	1
8	FP-036-92	Pipe 3/4 x 1-3/8 TBE (Black)	1
9	FP-022-17	Union 3/4 (Grd. Seat)	1
10	FP-036-92	Pipe 3/4 x 1-3/8 TBE (Black)	1
11	00-074696	Check Valve (3/4)	1
12	FP-059-14	Pipe 3/4 x 4-1/2 TBE	1
13	00-270329-00001	Solenoid Valve 3/4 (120 V.) (Incls. Items 14 & 15)	1
14	00-270318-00001	Coil - Solenoid Valve (120 V.)	1
15	00-270336	Service Kit - Solenoid Valve	1
16	FP-036-92	Pipe 3/4 x 1-3/8 TBE (Black)	1
17	FP-013-22	Elbow Pipe 3/4 x 90 Deg	1
18	FP-036-92	Pipe 3/4 x 1-3/8 TBE (Black)	1
*19	00-186922	Strainer - Line (3/4 In.) (Brass) (Kitz) (Incls. Items 20, 21, & 22) (Alternate to Item 34)	1
20	00-186923	Plug - Branch	1
21	00-186924	Gasket - Branch Plug	1
22	00-186925	Screen - Line Strainer	1
23	00-435027	Plate	1
24	00-435026	Gasket	1
25	SC-041-15	Cap Screw 5/16-18 x 11/4 Hex Hd	7
26	WS-017-08	Washer (0.328 x 0.625 x 0.062) (SST)	14
27	WL-006-23	Lockwasher 5/16 Helical (SST)	7
28	NS-015-11	Nut 5/16-18 Hex (SST)	7
29	00-288671	Heater - Water	1
30	FP-054-44	Pipe 3/4 x 2-1/2 TBE (SST)	1
31	FP-049-15	Elbow 3/4 x 90 Deg. (SST)	1
32	FP-059-76	Pipe 3/4 x 2 1/4 TBE	1
33	FP-013-22	Elbow Pipe 3/4 x 90 Deg	1
*34	00-186922	Strainer - Line (3/4 In.) (Brass) (Apollo / Conbraco) (Incls. Items 35, 36, & 37) (Alternate to Item 19)	1
35	00-749802-00001	Cap	1
36	00-749802-00002	Gasket	1
37	00-749802-00003	Screen (80 Mesh)	1
38	00-538850-00002	Sealer - Pipe	AR
39	00-545595	Sealer (1/8 Rd.)	AR

* Kitz line strainer is approx. 1/4" shorter than Apollo / Conbraco.

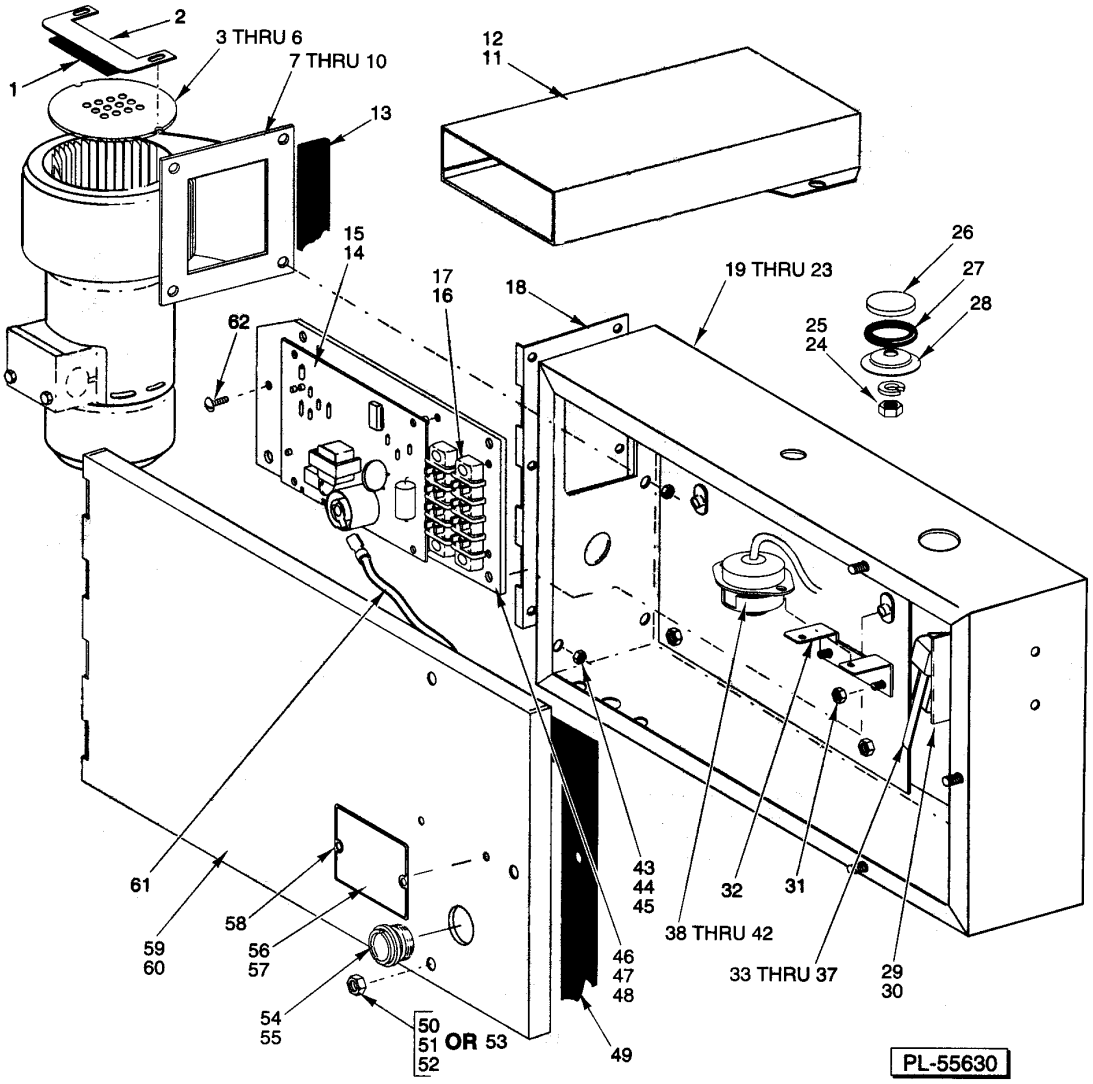

CONTROL BOX – GAS HEAT

CONTROL BOX - GAS HEAT

CONTROL BOX - GAS HEAT

ILLUS. PL-55630	PART NO.	NAME OF PART	AMT.
1	00-526454	Foam Tape (1 Wide x 1/8 Thk.)	AR
2	00-435539	Plate - Adjusting	1
3	00-274569	Plate - Restrictor (12 Holes) (Marked NG 60 Hz.) (Shown)	AR
4	00-436065	Plate - Restrictor (16 Holes) (Marked NG & LP 60 Hz. or 60 Hz.) (Nat. or LP Gas)	AR
5	00-436763	Plate - Restrictor (24 Holes) (Marked NG 50 Hz.)	AR
6	00-436765	Plate - Restrictor (28 Holes) (Marked LP 50 Hz.)	AR
7	00-274524-00002	Blower Motor (120 V.)	1
8	SC-113-26	Mach. Screw 1/4-20 x 5/8 Hex Hd	4
9	NS-031-21	Stop Nut 1/4-20 Hex (SST)	4
10	WS-003-48	Washer (SST)	4
11	SD-012-20	Self-Tapping Screw 8-32 x 1/2 Phil. Truss Hd., Type T	2
12	00-328650	Air Inlet Channel (Nat. Gas)	1
13	00-529390	Foam Tape (3/4 Wide x 1/16 Thk.)	AR
14	SD-009-40	Self-Tapping Screw 6-32 x 3/4 Phil. Pan Hd., Type F	4
15	00-436853	Ignitor Board (24 VAC)	1
16	00-294325-014-1	Block - Terminal	2
17	SD-009-17	Self-Tapping Screw 8-32 x 5/8 Phil. Pan Hd., Type F	4
18	00-436102	Bracket - Lid Mounting (Use W/Item 60)	1
19	00-436757	Gas Heat Box (Shown) (Use W/Item 60)	1
20	00-435022	Gas Heat Box (Use W/Item 59)	1
21	NS-015-01	Nut 1/4-20 Hex (SST)	7
22	WL-006-17	Lockwasher 1/4 Helical (SST)	7
23	WS-017-06	Washer (SST)	7
24	NS-015-01	Nut 1/4-20 Hex (SST)	1
25	WL-006-17	Lockwasher 1/4 Helical (SST)	1
26	00-119244	Cap & Stud Assy	1
27	00-067500-00031	O-Ring	1
28	00-119254	Retainer - Cap & Stud	1
29	00-274514-00001	Bracket	1
30	SC-067-06	Mach. Screw 10-24 x 1/2 Hex Hd. (SST)	2
31	NS-031-15	Stop Nut 10-24 Hex (SST)	2
32	00-271122	Bracket - Thermostat	1
33	00-087711-00221	Switch - Door S.P.D.T.	1
34	00-270280	Insulator - Door Switch	1
35	SC-112-90	Mach. Screw 4-40 x 1 Pan Hd	2
36	WL-003-03	Lockwasher #4 Helical	2
37	NS-009-02	Nut 4-40 Hex	2
38	00-271123	Protector - High Limit	1
39	00-328758	Jumper Wire - Socket Type Connector (Use W/Item 38)	2
40	00-293946	Sleeve - Lead	1
41	SC-021-08	Mach. Screw 6-32 x 3/8 Slotted Rd. Hd. (SST)	2
42	NS-031-50	Stop Nut 6-32 Hex (SST)	2
43	SC-113-26	Mach. Screw 1/4-20 x 5/8 Hex Hd	2
44	WS-003-48	Washer (SST)	2
45	NS-031-21	Stop Nut 1/4-20 Hex (SST)	2
46	00-435046	Control Plate	1
47	SC-018-01	Mach. Screw 10-24 x 3/8 Slotted Pan Hd	3
48	WL-014-07	Lockwasher #10 External Shakeproof (SST)	3
49	00-436745	Gasket - Lid	1
50	WS-029-79	Washer (SST)	AR
51	WL-006-07	Lockwasher #10 Helical (SST)	AR
52	SC-067-06	Mach. Screw 10-24 x 1/2 Hex Hd. (SST) Machine Screw 10-24 x 1/2 Hex Hd. (SST)	AR
53	NS-031-15	Stop Nut 10-24 Hex (SST)	3
54	00-435024	Eye - Box	1
55	NS-035-25	Lock Nut 3/4-16 Palnut	1

CONTROL BOX - GAS HEAT

ILLUS. PL-55630	PART NO.	NAME OF PART	AMT.
56	00-435375	Data Plate (L.P. Gas)	1
57	00-435374	Data Plate (Natural Gas)	1
58	00-114247-00001	Rivet - Drive	2
59	00-435023-00001	Lid - Gas Heat Box (W/O Notches)	1
60	00-436101-00001	Lid - Gas Heat Box (Shown) (W/Notches)	1
61	00-271146	Cable - High Voltage	1
62	SD-009-05	Self-Tapping Screw 6-32 x 5/16 Phil. Rd. Hd.,Type F	1
	00-294357-00001	Housing - Connector (Nat.)	AR
	00-294357-00002	Housing - Connector (Black)	AR
	00-294677-00003	Clamp - Wire (3/4 I.D.)	3
	NS-031-16	Stop Nut 10-24 Hex (SST)	3
	00-526408	Foam Tape	AR
	00-436766	Lid Assy. (Natural Gas) (Incls. Items 49, 57, 58, & 59)	1
	00-436767	Lid Assy. (Natural Gas) (Incls. Items 49, 57, 58, & 60)	1
	00-436768	Lid Assy. (L.P. Gas) (Incls. Items 49, 56, 58, & 60)	1

NOTES

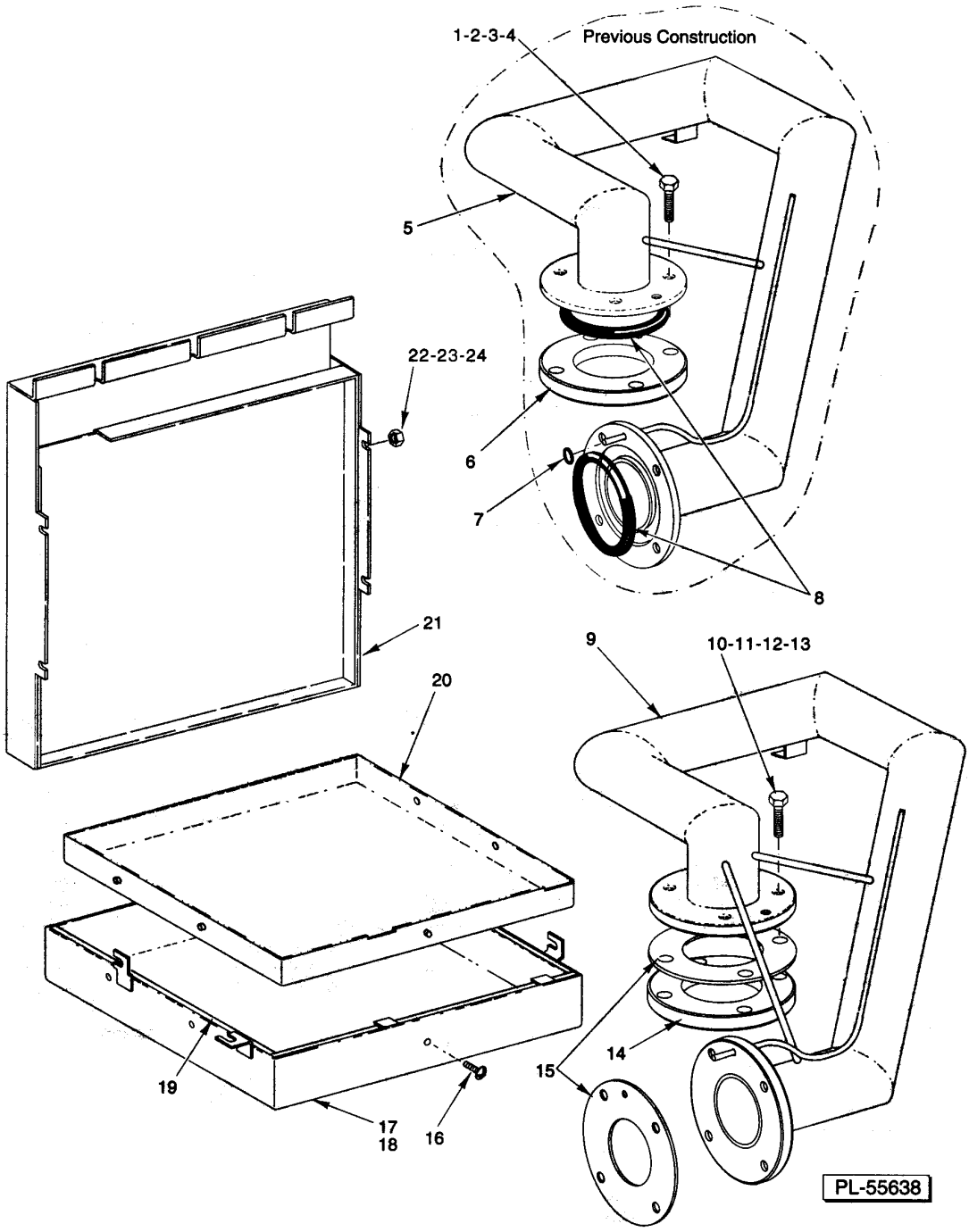

GAS BURNER AND FLUE

GAS BURNER AND FLUE

GAS BURNER AND FLUE

ILLUS. PL-55638	PART NO.	NAME OF PART	AMT.
1	SC-041-14	Cap Screw 5/16-18 x 1-1/8 Hex Hd. (SST)	AR
2	WS-017-08	Washer (0.328 x 0.625 x 0.062) (SST)	AR
3	WL-006-22	Lockwasher 5/16 Light (SST)	AR
4	NS-015-11	Nut 5/16-18 Hex (SST)	AR
5	00-274495	Tube - Immersion (With O-Ring Sealing Flange)	1
6	00-435952	Flange - Immersion Tube	1
7	00-067500-00123	O-Ring	1
8	00-067500-00122	O-Ring	2
9	00-436087	Tube - Immersion (W/Gasket Sealing Flange)	1
10	SC-121-43	Cap Screw 7/16-14 x 1-3/4 Hex Hd. (SST)	AR
11	WS-021-07	Washer (SST)	AR
12	WL-019-77	Lockwasher 7/16 Medium (SST)	AR
13	NS-047-97	Nut 7/16-14 Hex	AR
14	00-435952	Flange - Immersion Tube	1
15	00-436100	Gasket - Immersion Tube	2
16	SC-066-06	Mach. Screw 10-24 x 1/2 Phil. Truss Hd. (SST)	5
17	00-274496-00001	Shroud	1
18	00-274544	Shroud Assy. (Incls. Items 16, 17, 19, & 20)	1
19	00-274520	Insulation	1
20	00-274498-00001	Liner - Shroud	1
21	00-274565	Flue	1
22	NS-015-01	Nut 1/4-20 Hex (SST)	11
23	WL-006-17	Lockwasher 1/4 Helical (SST)	11
24	WS-017-06	Washer (SST)	11

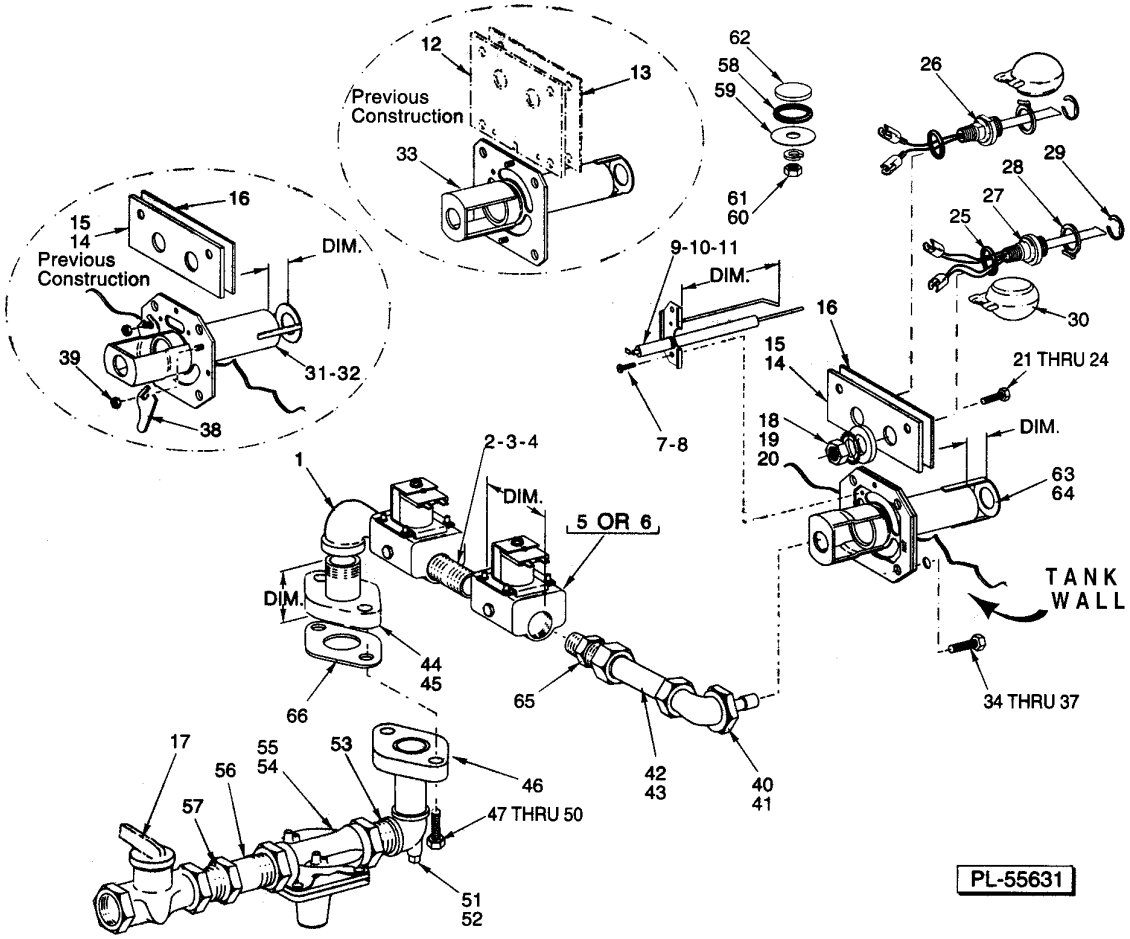

GAS HEAT COMPONENTS

GAS HEAT COMPONENTS

GAS HEAT COMPONENTS

ILLUS. PL-55631	PART NO.	NAME OF PART	AMT.
1	FP-015-10	Elbow - Street 3/8 x 90 Deg	1
2	FP-040-22	Pipe 3/8 x 2 TBE (Use W/Two 2" Valves; Ref. Item 6)	AR
3	FP-040-18	Pipe 3/8 x 1 (Use W/Two2 1/2" Valves; Ref. Item 5)	AR
4	FP-076-07	Pipe 3/8 x 1 1/2 (Use W/One 2" Valve and one2 1/2" Valve Combination)	AR
5		Gas Valve (Dim. 21/2) (Not Available) (Order Items 2, 3, or 4 & Item 6 as Required)	AR
6	00-436118	Gas Valve (Dim. 2)	2
7	SC-093-03	Mach. Screw 8-32 x 3/8 Slotted Pan Hd. (SST)	2
8	WL-014-05	Lockwasher #8 External Shakeproof (SST)	2
9	00-435028	Electrode Ignition - Natural Gas (Dim. 3) (Marked #659)	AR
10	00-436792	Electrode Ignition - Natural Gas (Dim. 31/8) (Marked #665)	AR
11	00-436067	Electrode Ignition - L.P. Gas (Dim. 33/8) (Marked #662)	AR
12		Plate - Mounting (Not Available) (Order Items 14 & 16)	1
13		Gasket (Not Available) (Order Items 14 & 16)	1
14	00-435960-00002	Plate - Spacer (Shown)	AR
15	00-435960-00001	Plate - Spacer (W/O Mounting Holes)	AR
16	00-435961	Gasket (Service)	AR
17	00-291988-00003	Valve - Gas (Shut Off)	1
18	NS-018-28	Jam Nut 1/2-20 Hex (SST)	AR
19	WL-014-31	Lockwasher 1/2 External Shakeproof (SST)	AR
20	WS-010-40	Washer - Thrust	AR
21	SC-041-14	Cap Screw 5/16-18 x 1-1/8 Hex Hd. (SST)	AR
22	WS-017-08	Washer (0.328 x 0.625 x 0.062) (SST)	AR
23	WL-006-22	Lockwasher 5/16 Light (SST)	AR
24	NS-015-11	Nut 5/16-18 Hex (SST)	AR
25	00-067500-00072	O-Ring	AR
*26	00-328495	Probe & Switch Assy. (2 Wire) (Water Level) (Incls. Items 28, 29, & 30)	AR
27	00-186091	Probe & Swich Assy. (4 Wire) (Temperature & Water Level) (Incls. Items 28, 29, & 30)	1
28	00-112467	Retainer - Float	AR
29	RR-010-13	Retaining Ring	AR
30	00-122674	Float Assy	AR
**31		Bracket - Orifice Natural Gas (Dim. 3/4) (Marked NG)	AR
***32	00-436761	Bracket - Orifice L.P. Gas Only (Dim. 1/2) (Marked NAT/LP)	AR
33	00-435591	Bracket - Orifice	AR
34	SC-121-43	Cap Screw 7/16-14 x 1-3/4 Hex Hd. (SST)	4
35	WL-019-77	Lockwasher 7/16 Medium (SST)	4
36	WS-021-07	Washer (SST)	8
37	NS-047-97	Nut 7/16-14 Hex	4
38		Cover - Adjusting (No Longer Available)	2
39	NS-031-15	Stop Nut 10-24 Hex (SST)	2
40	00-435701-00001	Angle Fitting Natural Gas #20 Drill (0.161)	1
41	00-435701-00002	Angle Fitting L.P. Gas #43 Drill (0.089)	1
42	00-435836-00002	Tube - Aluminum (2 1/8 Lg.)	1
43	00-435836-00001	Tube - Aluminum (2 1/4 Lg.) (Nat. Gas)	1
44	00-063262-00034	Flange & Nipple (Dim. 115/16)	1
45	00-063262-00033	Flange & Nipple (Dim. 21/16) (Nat. Gas)	1
46	00-063262-00032	Flange & Nipple	1
47	SC-041-17	Cap Screw 5/16-18 x 11/2 Hex Hd. (SST)	2
48	WS-017-08	Washer (0.328 x 0.625 x 0.062) (SST)	4
49	WL-006-22	Lockwasher 5/16 Light (SST)	2
50	NS-015-11	Nut 5/16-18 Hex (SST)	2
51	FP-028-07	Pipe Plug 1/4 Sq. Hd. (Brass)	1
52	FP-086-62	Tee 3/8 x 1/4 x 3/8 Reducing	1
53	FP-086-63	Pipe 3/8 x 13/8	1
54	00-435706-00001	Regulator - Natural Gas	1
55	00-435706-00002	Regulator - L.P. Gas	1

GAS HEAT COMPONENTS

ILLUS. PL-55631	PART NO.	NAME OF PART	AMT.
56	FP-035-58	Pipe 3/8 x 23/4	1
57	FP-026-14	Bushing 1/2 to 3/8	1
****58	00-067500-00031	O-Ring	AR
****59	WS-003-47	Washer (SST)	AR
****60	NS-015-01	Nut 1/4-20 Hex (SST)	AR
****61	WL-006-17	Lockwasher 1/4 Helical (SST)	AR
****62	00-119244-00002	Cap & Stud Assembly	AR
63	00-328649	Bracket - Orifice (Nat. Gas) (Shown) (Dim 1/2) (Marked NAT)	1
****64	00-436761	Bracket - Orifice (L.P. Gas Only) (Dim 1/2) (Marked LP)	1
65	00-435702	Connector - Male 7/16	1
66	00-435762	Gasket	2
	00-508454	Sealer (1/8 Rd.)	AR
	00-526408	Foam Tape	AR
	00-546292	Sealer - Pipe	AR
	00-065890-00029	Connector - Insulated	2
	00-435538	Wire Harness - Ignitor Board	1

* Must order 2 jumper wires Part No. 328758.
** No longer available. Order items 1, 2, 6, 10, 40, 43, 45, 63, & 65 & Part No. 436065.
*** Orifice bracket used previously on Nat. & L.P. gas heat machines.
**** Used on FRC76A, 66A, 80A, or FRC90A machines in place of item 26 in wash tank.

NOTES

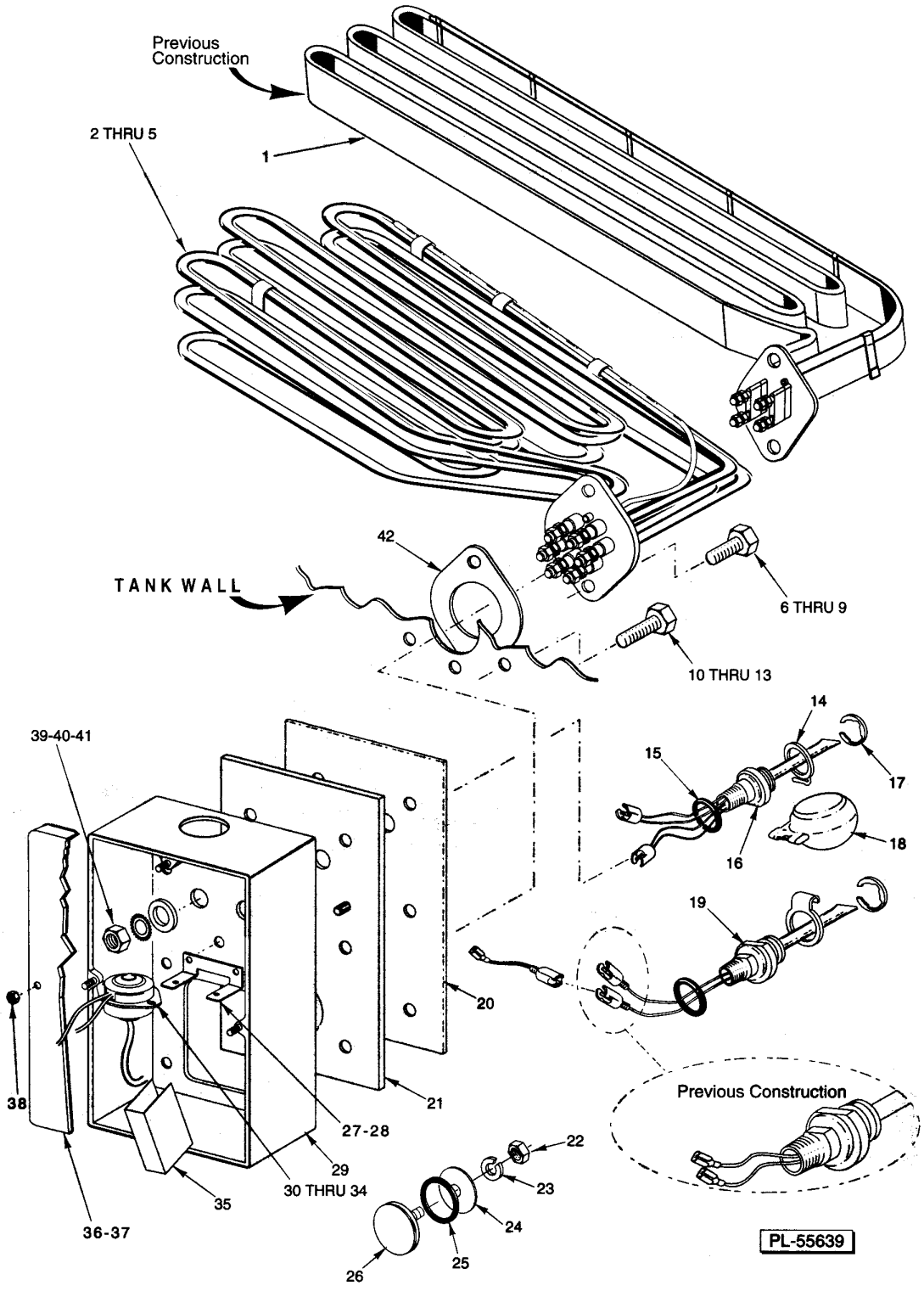

ELECTRIC HEAT

ELECTRIC HEAT

ELECTRIC HEAT

ILLUS. PL-55639	PART NO.	NAME OF PART	AMT.
*1		Heater - Tank Electric (Flat Ribbon Type) (Not Available; See Below)	AR
2	00-435990-00001	Heater - Tank Electric (208 V., 60 Hz./200 V., 50 Hz.) (3 Ph.)	1
3	00-435990-00002	Heater - Tank Electric (240 V., 50/60 Hz.) (3 Ph.)	1
4	00-435990-00005	Heater - Tank Electric (480 V., 60 Hz.) (3 Ph.)	1
5	00-435990-00006	Heater - Tank Electric (380 V., 50 Hz.) (3 Ph.)	1
6	SC-041-13	Cap Screw 5/16-18 x 1 Hex Hd. (SST)	2
7	WS-017-08	Washer (0.328 x 0.625 x 0.062) (SST)	2
8	WL-006-23	Lockwasher 5/16 Helical (SST)	2
9	NS-015-11	Nut 5/16-18 Hex (SST)	2
10	SC-041-13	Cap Screw 5/16-18 x 1 Hex Hd. (SST)	6
11	WS-029-05	Washer 0.328 x 0.750 x 0.062 (SST)	12
12	WL-006-23	Lockwasher 5/16 Helical (SST)	6
13	NS-015-11	Nut 5/16-18 Hex (SST)	6
14	00-112467	Retainer - Float	AR
15	00-067500-00072	O-Ring	AR
16	00-186091	Probe & Switch Assy. (4 Wire) (Temperature & Water Level) (Incls. Items 14, 17, & 18)	1
17	RR-010-13	Retaining Ring	AR
18	00-122674	Float Assy	AR
**19	00-328495	Probe & Switch Assy. (2 Wire) (Water Level) (Incls. Items 14, 17, & 18)	AR
20	00-271109	Gasket - Mounting	1
21	00-271118-00001	Plate - Mounting	1
***22	NS-015-01	Nut 1/4-20 Hex (SST)	AR
***23	WL-006-17	Lockwasher 1/4 Helical (SST)	AR
***24	WS-003-47	Washer (SST)	AR
***25	00-067500-00031	O-Ring	AR
***26	00-119244-00002	Cap & Stud Assembly	AR
27	00-271122	Bracket - Thermostat	1
28	NS-031-15	Stop Nut 10-24 Hex (SST)	2
29	00-474512-00001	Box - Electric Heat	1
30	00-293946	Sleeve - Lead	1
31	00-271123	Protector - High Limit (Order Item 35 as Required)	1
32	SC-021-08	Mach. Screw 6-32 x 3/8 Slotted Rd. Hd. (SST)	2
33	NS-031-50	Stop Nut 6-32 Hex (SST)	2
34	00-328758	Jumper Wire - Socket-Type Connector (Use W/Item 31)	2
35	00-950696	Insulator - Terminal (Above 250 V.)	1
36	00-474574-00002	Lid Assy. (Incls. Item 39)	1
37	00-474569	Gasket - Electric Heat Box	1
38	NS-031-15	Stop Nut 10-24 Hex (SST)	6
39	WS-010-40	Washer - Thrust	AR
40	WL-014-31	Lockwasher 1/2 External Shakeproof (SST)	AR
41	NS-018-28	Jam Nut 1/2-20 Hex (SST)	AR
42	00-293598	Gasket - Heater Mounting	1
	00-526454	Foam Tape	AR
	00-545595	Sealer (1/8 Rd.)	AR
	00-294357-00001	Housing - Connector (Nat.)	AR
	00-294357-00002	Housing - Connector (Black)	AR
	00-065890-00029	Connector - Insulated	2

* Order tubular-type heater, items 2 thru 5, as required & wiring kit 00-436074.
** Must order two jumper wires, Part No. 328758.
*** Used on FRC76A, FRC66A, FRC90A, or FRC80A machines in place of item 19 in wash tank.

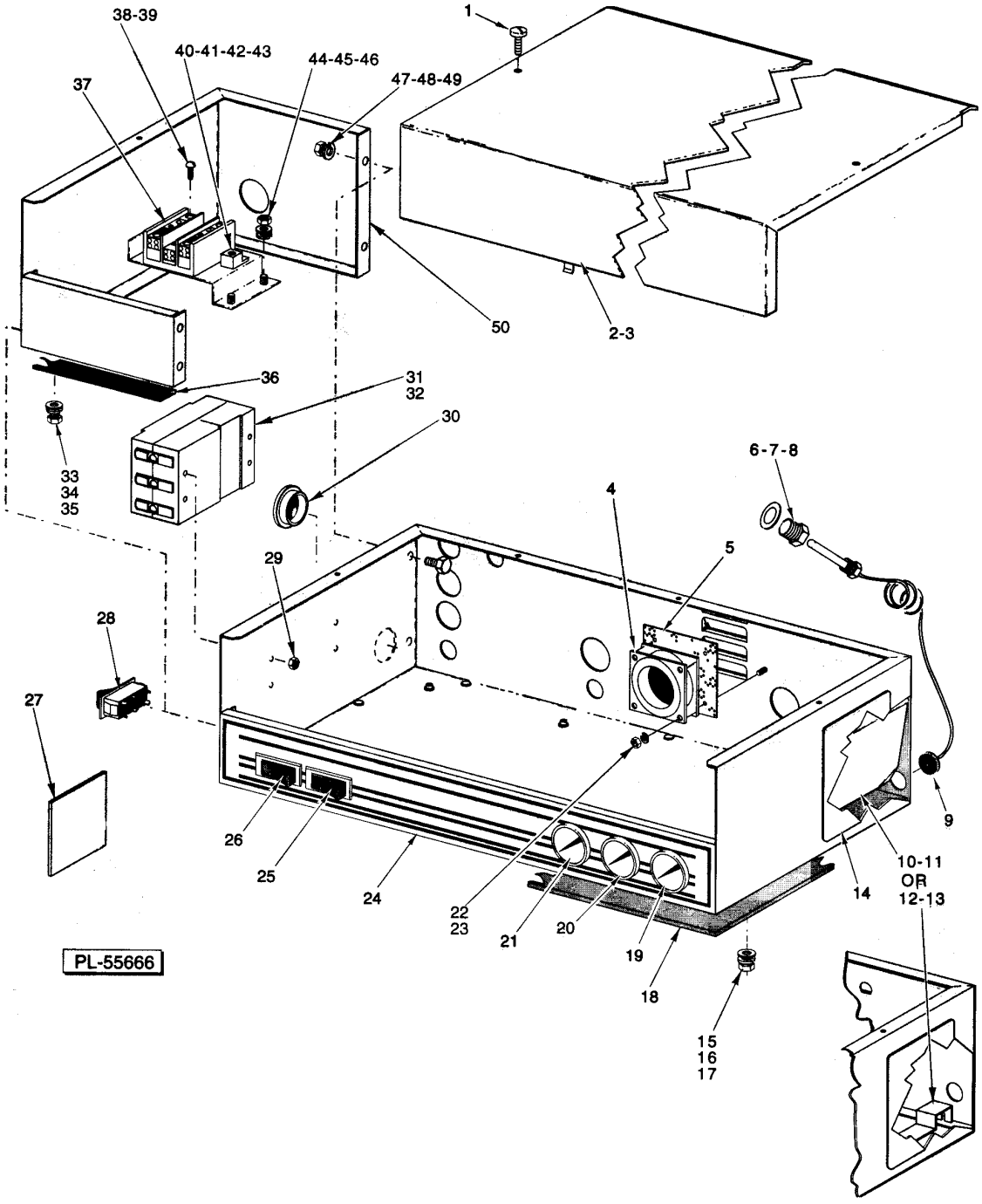

CONTROL BOX

CONTROL BOX

CONTROL BOX

ILLUS. PL-55666	PART NO.	NAME OF PART	AMT.
1	SC-053-05	Mach. Screw 10-24 x 3/8 Slotted Truss Hd. (SST)	2
2	00-436755-00001	Cover - Control Box (W/O SPEC)	1
3	00-437073-00001	Cover - Control Box (W/SPEC)	1
4	00-355504-00001	Fan (115 V.)	1
5	00-274884	Guard - Fan	1
6	00-107218	Coupling - Thermometer Bulb	3
7	WS-012-40	Washer (SST)	4
8	FP-053-05	Pipe Lock Nut 1/2 NPSL (SST)	3
9	00-274947	Grommet	1
10	00-328137	Shield	1
11	NS-031-15	Stop Nut 10-24 Hex (SST)	2
12	00-474072	Sheild - Capillary	1
13	SD-008-25	Self-Tapping Screw 10-16 Phil. Pan Hd., Type B	2
14	00-436711	Label - Instruction	1
15	WS-022-01	Washer (SST)	6
16	WL-006-17	Lockwasher 1/4 Helical (SST)	6
17	NS-031-21	Nut 1/4-20 Hex (SST)	6
18	00-435072	Gasket	1
19	00-437041-00003	Thermometer (8 Ft.) (Final Rinse)	1
20	00-437041-00004	Thermometer (11 Ft.) (Rinse)	1
21	00-437041-00004	Thermometer (11 Ft.) (Wash / Rinse)	1
22	WL-006-42	Lockwasher #6 Medium (SST)	3
23	NS-011-07	Nut 6-32 Hex (SST)	3
24	00-812854	Label - Control Box	AR
25	00-087711-228-1	Switch - Rocker (Motor On/Off)	1
26	00-087711-198-2	Switch - Rocker (Power On/Off)	1
27	00-329408	Label - Instruction (Gas Heat)	1
28	00-435382	Switch - Blank	1
29	NS-031-08	Stop Nut 8-32 Special (SST)	4
30	FE-024-13	Bushing - Electrical 21/2	1
31	00-276259-00004	Circuit Breaker (40 Amp.) (Used on 200-240 V. Machines)	1
32	00-276259-00002	Circuit Breaker (20 Amp.) (Used on 380-480 V. Machines)	1
33	WL-006-17	Lockwasher 1/4 Helical (SST)	2
34	WS-017-06	Washer (SST)	2
35	NS-031-21	Nut 1/4-20 Hex (SST)	2
36	00-526408	Tape - Foam	AR
37	00-119031	Block - Terminal	1
38	SC-021-24	Mach. Screw 10-24 x 5/8 Rd. Hd	4
39	NS-031-16	Stop Nut 10-24 Elastic (SST)	4
40	00-118544-00002	Lug - Grounding	1
41	SC-021-23	Mach. Screw 10-24 x 1/2 Rd. Hd	1
42	WL-007-12	Lockwasher #10 External Shakeproof	1
43	NS-031-16	Stop Nut 10-24 Elastic (SST)	1
44	WL-006-17	Lockwasher 1/4 Helical (SST)	2
45	WS-022-01	Washer (SST)	2
46	NS-015-01	Nut 1/4-20 Hex (SST)	2
47	NS-015-01	Nut 1/4-20 Hex (SST)	4
48	WL-006-17	Lockwasher 1/4 Helical (SST)	4
49	SC-041-05	Cap Screw 1/4-20 x 5/8 Hex Hd	4
50	00-437068	Control Box (SPEC, Elec. Heat Only)	1
	FE-021-12	Plug - 1/2 Knockout (Plastic)	AR
	FE-023-26	Plug - 1 Knockout (Plastic)	AR

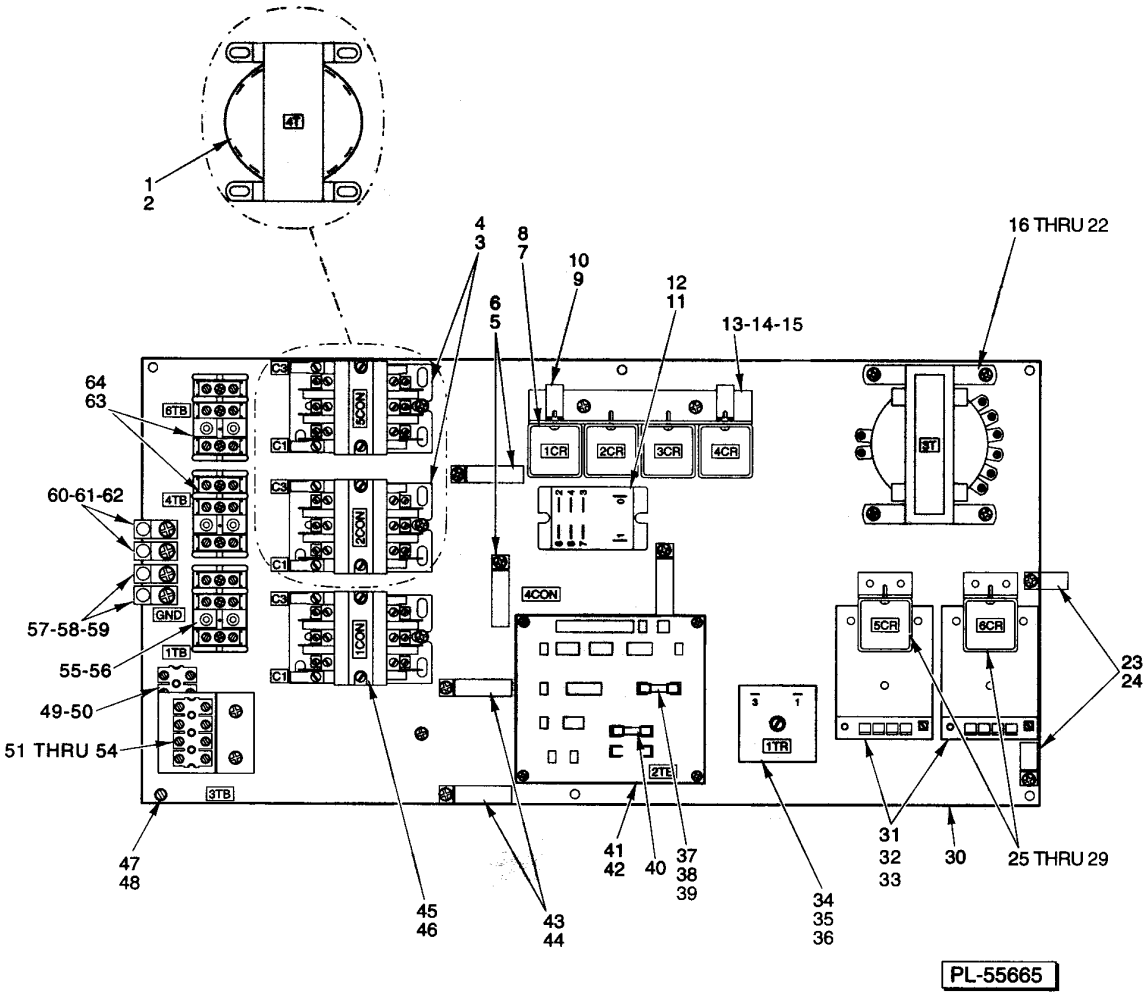

COMPONENT PANEL
(CONTROL BOX)

COMPONENT PANEL
(CONTROL BOX)

COMPONENT PANEL (CONTROL BOX)

ILLUS. PL-55665	PART NO.	NAME OF PART	AMT.
1	00-294500-026-1	Transformer (75 VAC) (Gas Heat)	1
2	SD-008-25	Self-Tapping Screw 10-16 x 3/8 Phil. Pan Hd., Type B	4
3	00-918322	Contactor (40 Amp., 3-Pole) (Electric Heat)	2
4	SD-008-25	Self-Tapping Screw 10-16 x 3/8 Phil. Pan Hd., Type B	4
5	00-294677-00005	Clamp - Wire (11/2 I.D.)	5
6	SD-008-25	Self-Tapping Screw 10-16 x 3/8 Phil. Pan Hd., Type B	5
7	00-205113-00001	Relay (3.P.D.T.) Relay 3PDT	4
8	SD-019-29	Self-Tapping Screw 6-20 x 1/2 Phil. Pan Hd., Type B	8
9	00-294677-00004	Clamp - Wire (1 I.D.)	2
10	SD-008-25	Self-Tapping Screw 10-16 x 3/8 Phil. Pan Hd., Type B	2
11	00-087714-046-1	Contactor (Machines W/Vent Fan Control)	1
12	SD-008-18	Self-Tapping Screw 8-18 x 3/8 Phil. Bind Hd., Type B	2
13	00-437103	Bracket	1
14	SD-008-25	Self-Tapping Screw 10-16 x 3/8 Phil. Pan Hd., Type B	2
15	WL-014-07	Lockwasher #10 External Shakeproof (SST)	2
16	00-294500-046-1	Transformer (150 VAC) Pilot Control	1
17	00-294500-046-2	Transformer (300 VAC) Pilot Control	1
18	00-294500-024-3	Transformer (500 VAC) Pilot Control (Gas)	1
19	SD-008-25	Self-Tapping Screw 10-16 x 3/8 Phil. Pan Hd., Type B (Use with Item 16 or 17)	4
20	WL-014-07	Lockwasher #10 External Shakeproof (SST) (Use with Item 16 or 17)	4
21	SD-035-17	Self-Tapping Screw 6-20 x 1/4 Phil. Rd. Hd., Type B	4
22	WL-007-15	Lockwasher 1/4 External (Use with Item 18)	4
23	00-294677-00002	Clamp - Wire (1/2 I.D.)	2
24	SD-008-25	Self-Tapping Screw 10-16 x 3/8 Phil. Pan Hd., Type B	2
25	00-205113-00001	Relay (3.P.D.T.) Relay (3 P.D.T.)	2
26	SD-019-29	Self-Tapping Screw 6-20 x 1/2 Phil. Pan Hd., Type B	4
27	00-437102	Bracket - Relay Mounting	2
28	SD-008-18	Self-Tapping Screw 10-16 x 3/8 Phil. Bind Hd., Type B	4
29	WL-014-05	Lockwasher #8 External Shakeproof (SST)	4
30	00-435508	Base Plate	1
31	00-475458-00001	Thermostat - Solid State (120 V.)	2
32	SC-098-07	Mach. Screw 4-40 x 1-3/4 Slotted Rd. Hd. (SST)	6
33	WS-028-12	Washer (Fiber)	6
34	00-087714-031-2	Relay Time Delay (5 Sec.)	1
35	SD-036-13	Self-Tapping Screw 1/4-20 x 11/4 Slotted Hex Washer Hd., Type T	1
36	WL-007-15	Lockwasher 1/4 External Shakeproof	1
37	FE-022-39	Fuse (1.5 Amp.) (250 V.)	1
38	FE-021-19	Fuse (3.2 Amp.) (250 V.) (50 Hz. & 50/60 Hz. Machines W/Blower Dryer &/or Condenser)	1
39	FE-023-25	Fuse (5.0 Amp., 250 V.)	1
40	FE-023-80	Fuse (3.0 Amp.) (250 V.) (Gas Heat)	1
41	00-294676	PCB - Terminal & Fuse	1
42	SD-008-18	Self-Tapping Screw 8-18 x 3/8 Phil. Bind Hd., Type B	4
43	00-294677-00004	Clamp - Wire (1 I.D.)	3
44	SD-008-25	Self-Tapping Screw 10-16 x 3/8 Phil. Pan Hd., Type B	3
45	00-918322	Contactor (40 Amp., 3-Pole) Contactor (40 Amp.) (3 Pole)	1
46	SD-008-25	Self-Tapping Screw 10-16 x 3/8 Phil. Pan Hd., Type B	2
47	SC-053-05	Mach. Screw 10-24 x 3/8 Slotted Truss Hd. (SST)	6
48	WL-007-12	Lockwasher #10 External Shakeproof	6
49	00-294325-013-4	Block - Terminal	1
50	SD-019-29	Self-Tapping Screw 6-20 x 1/2 Phil. Pan Hd., Type B	2
51	00-294325-013-4	Block - Terminal (Machines W/Vent Fan Control)	1
52	00-437101	Bracket - Vent Fan Control	1
53	SD-008-25	Self-Tapping Screw 10-16 x 3/8 Phil. Pan Hd., Type B	2
54	SD-019-29	Self-Tapping Screw 6-20 x 1/2 Phil. Pan Hd., Type B	2
55	00-294325-015-1	Block - Terminal	1

COMPONENT PANEL (CONTROL BOX)

ILLUS. PL-55665	PART NO.	NAME OF PART	AMT.
56	SD-037-21	Self-Tapping Screw 8-32 x 1 Phil. Fil. Hd., Type F	2
57	00-118544-00002	Lug - Grounding	2
58	SD-035-77	Self-Tapping Screw 1/4-20 x 3/8 Phil. Pan Hd., Type TT	2
59	WL-007-15	Lockwasher 1/4 External Shakeproof	2
60	00-118544-00002	Lug - Grounding (Electric Heat)	2
61	SD-035-77	Self-Tapping Screw 1/4-20 x 3/8 Phil. Pan Hd., Type TT	2
62	WL-007-15	Lockwasher 1/4 External Shakeproof	2
63	00-294325-015-1	Block - Terminal (200-240 V., 380-480 V., 3 Ph.) (Electric Heat)	2
64	SD-037-21	Self-Tapping Screw 8-32 x 1 Fil. Phil. Hd., Type F (Use with Item 63)	4

NOTES

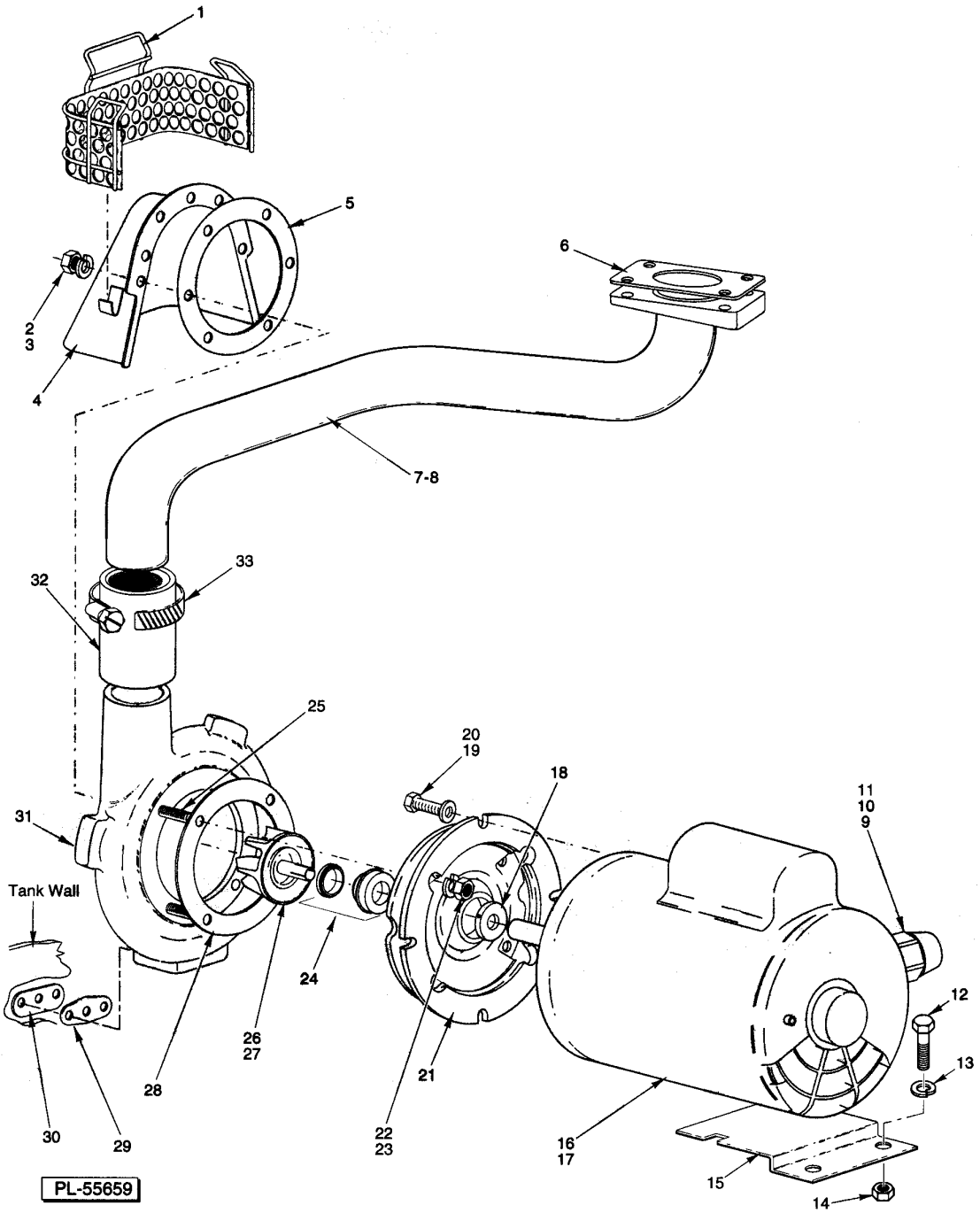

WASH MOTOR AND PUMP UNITS
(2 UNITS REQUIRED)

WASH MOTOR AND PUMP UNITS
(2 UNITS REQUIRED)

WASH MOTOR AND PUMP UNITS
(2 UNITS REQUIRED)

ILLUS. PL-55659	PART NO.	NAME OF PART	AMT.
1	00-328362	Strainer - Pump	1
2	WL-006-23	Lockwasher 5/16 Helical (SST)	10
3	NS-015-11	Nut 5/16-18 Hex (SST)	10
4	00-274246	Shroud	1
5	00-119050	Gasket	1
6	00-270968	Gasket - Wash Pipe	1
7	00-328411	Tube - Discharge (RH) (Shown)	1
8	00-328409	Tube - Discharge (LH)	1
9	FE-008-10	1/2 Gasket Assy	1
10	FE-024-57	Connector Straight (Non-Metallic) Sealtite (1/2 Male Thd. x 1/2 Flex. Cnd.)	AR
11	FE-024-61	Connector 45 Deg. (Non-Metallic) Sealtite (1/2 Male Thd. x 1/2 Flex. Cnd.)	AR
12	SC-041-05	Cap Screw 1/4-20 x 5/8 Hex Hd. (SST)	2
13	WL-006-17	Lockwasher 1/4 Helical (SST)	2
14	NS-015-01	Nut 1/4-20 Hex (SST)	2
15	00-812069	Bracket - Motor Support	1
16	00-274230-00004	Motor (3 Ph., 50 Hz.) (2 Hp.)	1
17	00-274230-00002	Motor (3 Ph., 60 Hz.) (2 Hp.)	1
18	00-274227-00002	Clamp	1
19	SC-041-29	Cap Screw 3/8-16 x 7/8 Hex Hd. (SST)	4
20	WS-006-44	Washer (SST)	4
21	00-274227-00003	Adapter	1
22	WL-006-22	Lockwasher 5/16 Light (SST)	4
23	NS-015-11	Nut 5/16-18 Hex (SST)	4
24	00-274227-00006	Seal - Shaft	1
25	00-274227-00005	Stud	AR
26	00-274227-00012	Impeller & Sleeve (60 Hz.)	1
27	00-274227-00007	Impeller & Sleeve (50 Hz.)	1
28	00-274227-00004	Gasket	1
29	00-119051	Gasket	2
30	00-812776	Support Plate	2
31	00-274227-00001	Pump Shell (Incls. Item 25)	1
32	00-749586	Hose - Discharge	1
33	00-542337	Clamp - Hose	2

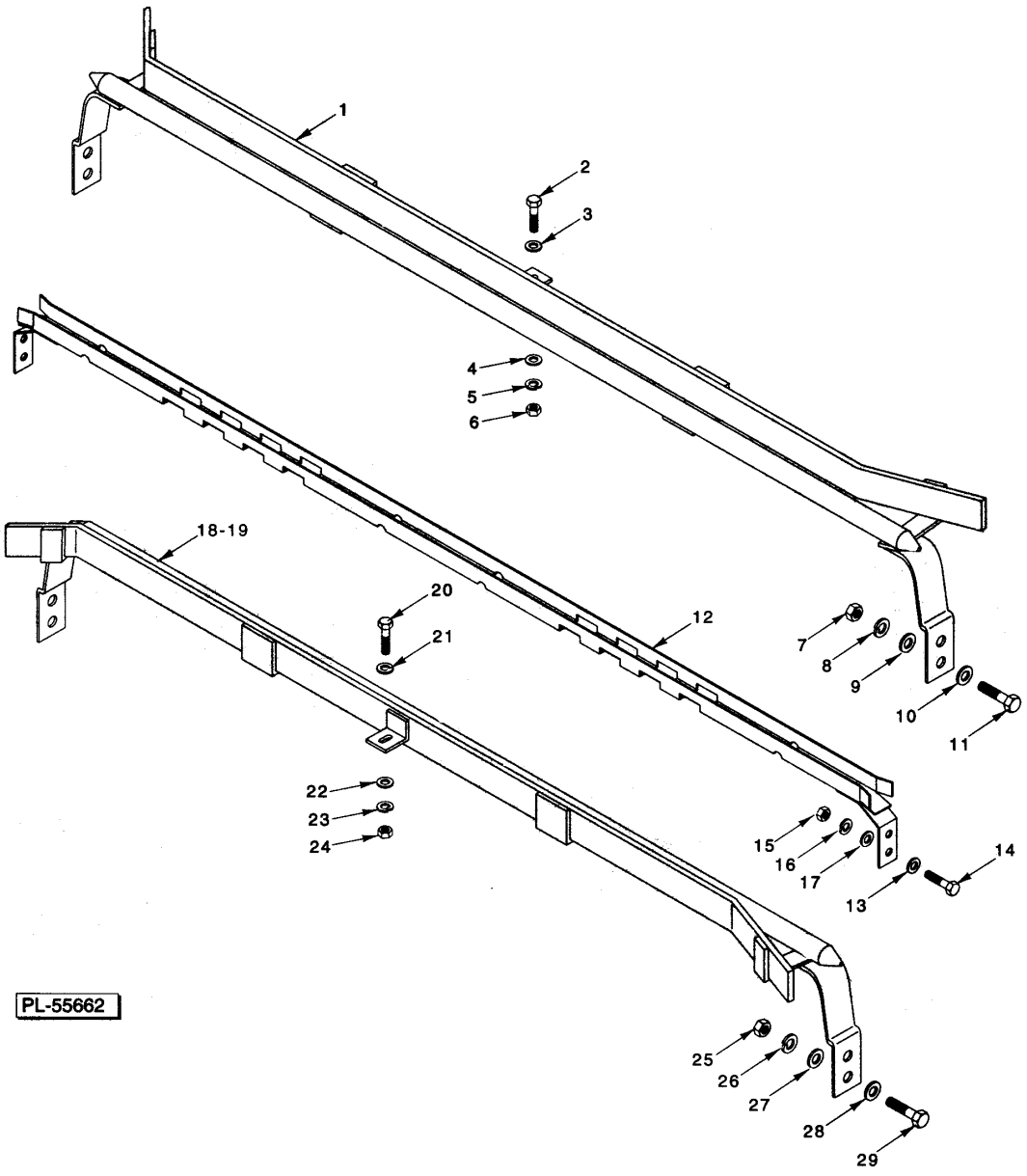

TRACK AND CHAIN GUIDE

TRACK AND CHAIN GUIDE

TRACK AND CHAIN GUIDE

ILLUS. PL-55662	PART NO.	NAME OF PART	AMT.
1	00-328333	Rack Track (Rear)	1
2	SC-041-12	Cap Screw 5/16-18 x 7/8 Hex Hd. (SST)	1
3	WS-017-08	Washer (SST)	1
4	WS-017-08	Washer (SST)	1
5	WL-006-23	Lockwasher 5/16 Regular (SST)	1
6	NS-015-11	Nut 5/16-18 (SST)	1
7	NS-015-11	Nut 5/16-18 (SST)	4
8	WL-006-23	Lockwasher 5/16 Regular (SST)	4
9	WS-017-08	Washer (SST)	4
10	WS-017-08	Washer (SST)	4
11	SC-041-11	Cap Screw 5/16-18 x 3/4 Hex Hd. (SST)	4
12	00-328331-00001	Chain Guide	1
13	WS-006-27	Washer (SST)	4
14	SC-041-30	Cap Screw 3/8-16 x 1 Hex Hd. (SST)	4
15	NS-015-13	Nut 3/8-16 (SST)	4
16	WL-006-27	Lockwasher 3/8 Helical (SST)	4
17	WS-006-27	Washer (SST)	4
18	00-328332-00001	Rack Track (Front L-R)	1
19	00-328332-00002	NLA - Obsolete--Rack Track (Front R-L)	1
20	SC-041-12	Cap Screw 5/16-18 x 7/8 Hex Hd. (SST)	1
21	WS-017-08	Washer (SST)	1
22	WS-017-08	Washer (SST)	1
23	WL-006-23	Lockwasher 5/16 Regular (SST)	1
24	NS-015-11	Nut 5/16-18 (SST)	1
25	NS-015-11	Nut 5/16-18 (SST)	4
26	WL-006-23	Lockwasher 5/16 Regular (SST)	4
27	WS-017-08	Washer (SST)	4
28	WS-017-08	Washer (SST)	4
29	SC-041-11	Cap Screw 5/16-18 x 3/4 Hex Hd. (SST)	4

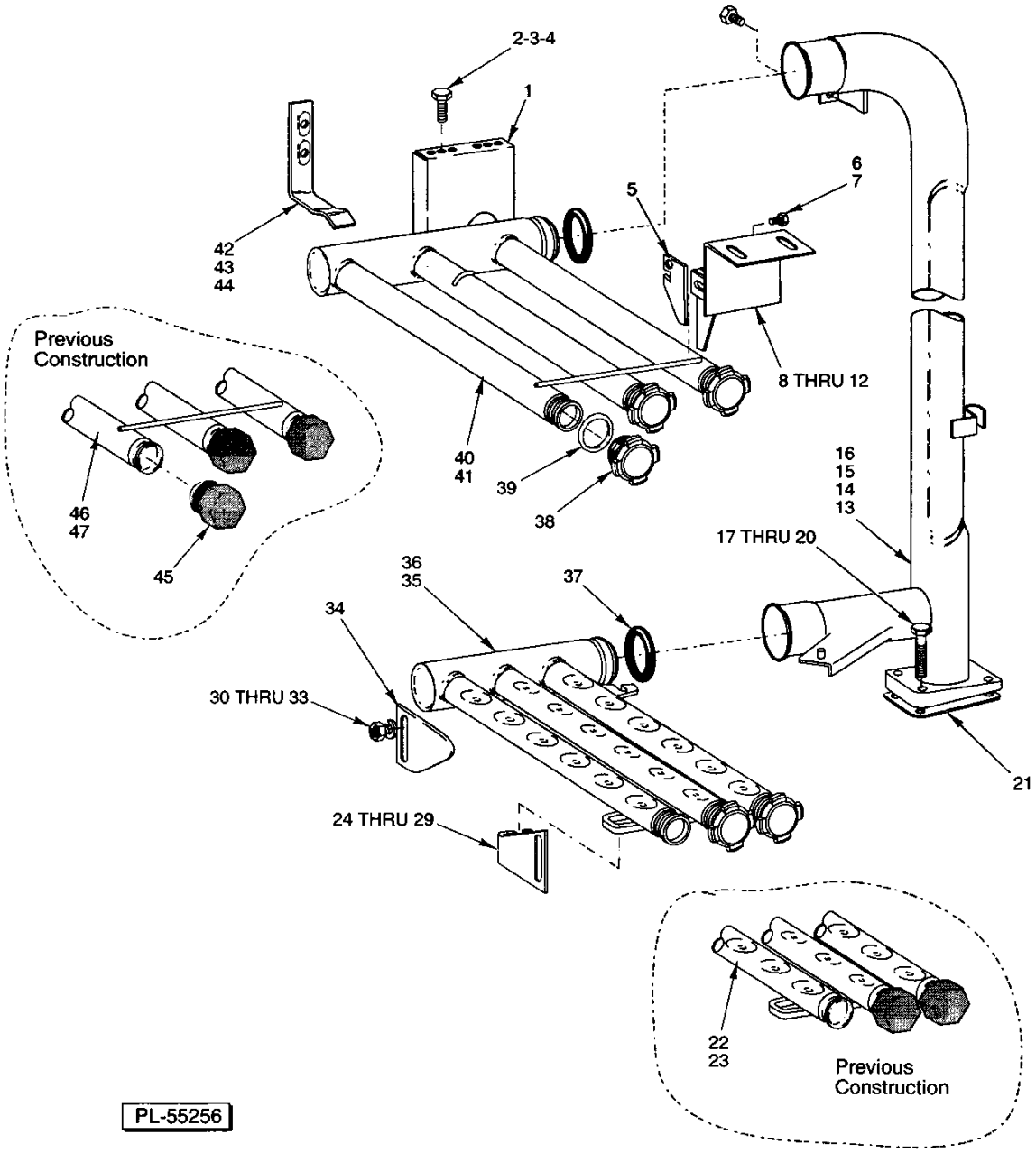

WASH ARMS AND TUBES
(WASH/RINSE SECTION)

WASH ARMS AND TUBES
(WASH/RINSE SECTION)

ILLUS. PL-55256	PART NO.	NAME OF PART	AMT.
1	00-436007	Guide - Upper Wash Arm	2
2	SC-125-27	Mach. Screw 5/16-18 x 3/4 Truss Hd. (SST)	4
3	WS-017-01	Washer 0.328 x 0.875 x 0.062 (SST)	4
4	NS-036-19	Stop Nut 5/16-18 Hex	4
5	00-289760	Latch	2
6	SC-041-01	Cap Screw 1/4-20 x 3/4 Hex Hd	4
7	NS-031-19	Stop Nut 1/4-20 Elastic (SST)	4
8	00-812819	Bracket	2
9	SC-053-17	Mach. Screw 5/16-18 x 3/4 Slotted Truss Hd. (SST)	4
10	WS-017-08	Washer (0.328 x 0.625 x 0.062) (SST)	4
11	WL-006-23	Lockwasher 5/16 Helical (SST)	4
12	NS-015-11	Nut 5/16-18 Hex (SST)	4
13	00-435999	Wash Pipe (26 1/8 Door Height) (RH)	1
14	00-435987	Wash Pipe (26 1/8 Door Height) (LH)	1
15	00-437134	Wash Pipe (32 1/8 Door Height) (RH)	1
16	00-437136	Wash Pipe (321/8 Door Height) (LH)	1
17	SC-041-18	Cap Screw 5/16-18 x 1-3/4 Hex Hd. (SST)	8
18	WS-017-08	Washer (0.328 x 0.625 x 0.062) (SST)	16
19	WL-006-23	Lockwasher 5/16 Helical (SST)	8
20	NS-015-11	Nut 5/16-18 Hex (SST)	8
21	00-270968	Gasket - Wash Pipe	2
*22	00-436002	NLA - Obsolete--Wash Arm - Lower (RH) (Shown)	1
*23	00-436000	Wash Arm - Lower (LH)	1
24	00-436939-00002	Catch - Adjustable (RH) (Shown)	1
25	00-436939-00001	Catch - Adjustable (LH)	1
26	NS-015-11	Nut 5/16-18 Hex (SST)	4
27	WL-006-23	Lockwasher 5/16 Helical (SST)	4
28	WS-017-8	Washer	4
29	SC-041-11	Cap Screw 5/16-18 x 3/4 Hex Hd. (SST)	4
30	SC-041-11	Cap Screw 5/16-18 x 3/4 Hex Hd. (SST)	4
31	WL-006-23	Lockwasher 5/16 Helical (SST)	4
32	WS-017-08	Washer (0.328 x 0.625 x 0.062) (SST)	4
33	NS-015-11	Nut 5/16-18 Hex (SST)	4
34	00-274222	Support - Adjustable	2
35	00-749416	Wash Arm - Lower (RH) (Shown)	1
36	00-749415	Wash Arm - Lower (LH)	1
37	00-067500-00110	O-Ring	4
38	00-475589	Plug - Wash Arm (Used with Items 35, 37, 43, & 44)	12
39	00-067500-00127	O-Ring - AS568 Size 124 (1.237 x .103)	12
40	00-749419	Wash Arm - Upper (RH) (Shown)	1
41	00-749417	Wash Arm - Upper (LH)	1
42	00-436947-00001	Hanger	4
43	SC-041-50	Cap Screw 1/4-20 x 1/2 Hex Hd. (SST)	8
44	WL-006-17	Lockwasher 1/4 Helical (SST)	8
45	00-475087	Plug - Wash Arm (Used with Items 22, 23, 46, & 47)	12
*46	00-436945	NLA - Obsolete--Wash Arm - Upper (RH) (Shown)	1
*47	00-436946	Wash Arm - Upper (LH)	1

* Obsolete part number. For replacement, use item 35, 36, 40, or 41 with items 38 & 39.

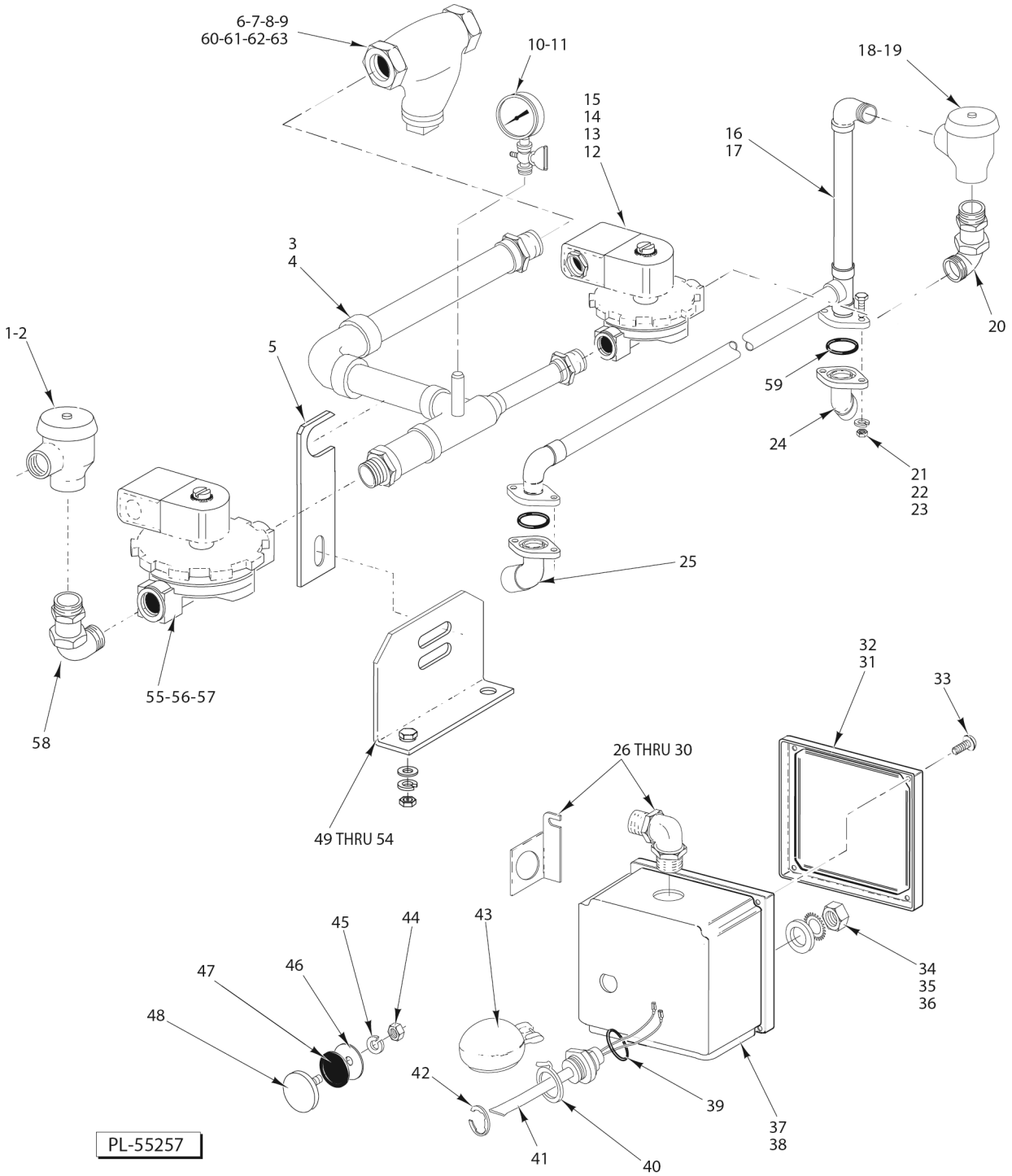

FILL AND OUTSIDE RINSE PIPING

FILL AND OUTSIDE RINSE PIPING

ILLUS. PL-55257	PART NO.	NAME OF PART	AMT.
1	00-277112-00003	Vacuum Breaker (3/4)	1
2	00-118270	Service Kit - Vacuum Breaker	1
3	00-812956-00002	Piping Sub-Assy. (R-L)	1
4	00-812956-00001	Piping Sub-Assy. (L-R)	1
5	00-435967	Plate - Fill Piping	1
*6	00-186922	Strainer - Line (3/4 In.) (Brass) (Kitz) (Incls. Items 7, 8, & 9) (Alternate to Item 60)	1
7	00-186923	Plug - Branch	1
8	00-186924	Gasket - Branch Plug	1
9	00-186925	Screen - Line Strainer	1
10	00-328247	Pressure Gauge - Water	1
11	00-436319	Petcock 1/4	1
12	00-435968-00001	Solenoid Valve 1/2 (115 V.) (Incls. Item 13)	1
13	00-271839-00001	Coil - Solenoid Valve	1
14	FE-024-57	Connector Straight (Non-Metallic) Sealtite (1/2 Male Thd. x 1/2 Flex. Cnd.)	2
15	FE-024-61	Connector 45 Deg. (Non-Metallic) Sealtite (1/2 Male Thd. x 1/2 Flex. Cnd.)	2
16	00-329831-00002	Fill Piping - Outside (R-L)	1
17	00-329831-00001	Fill Piping - Outside (L-R)	1
18	00-292909-00002	Vacuum Breaker 1/2	1
19	00-292910	Vacuum Breaker Float & Seal Assy	1
20	00-329829	Adapter & Elbow Weldment 1/2	1
21	SC-041-15	Cap Screw 5/16-18 x 11/4 Hex Hd	4
22	WL-006-23	Lockwasher 5/16 Helical (SST)	4
23	NS-015-11	Nut 5/16-18 Hex (SST)	4
24	00-435972-00002	Piping - Inside (RH)	1
25	00-435972-00001	Piping - Inside (LH)	1
**26	WL-013-16	Lockwasher 5/16 Internal Shakeproof (SST)	1
**27	00-436718	Ground Strap	1
**28	FE-006-37	Elbow 90 Deg. Short (1/2 Male Thd. x 1/2 Thinwall)	2
**29	FE-008-10	1/2 Gasket Assy	2
**30	FE-006-07	Lock Nut 1/2 (Cnd.)	2
**31	00-112007	Gasket	1
**32	00-288465	Lid & Gasket Assy. (Incls. Item 31)	1
**33	SD-012-20	Self-Tapping Screw 8-32 x 1/2 Phil. Truss Hd., Type T	4
**34	NS-018-28	Jam Nut 1/2-20 Hex Fin	1
**35	WL-014-31	Lockwasher 1/2 External Shakeproof (SST)	1
**36	WS-010-40	Washer - Thrust	1
**37	00-270926	Junction Box - Auto Fill (RH) (R-L)	1
**38	00-436026	Junction Box - Auto Fill (LH) (L-R)	1
**39	00-067500-00072	O-Ring	1
**40	00-112467	Retainer - Float	1
**41	00-271622	Probe & Switch Assy. (2 Wire) (Water Level)	1
**42	RR-010-13	Retaining Ring	1
**43	00-122674	Float Assy	1
44	NS-015-01	Nut 1/4-20 Hex (SST)	AR
45	WL-006-17	Lockwasher 1/4 Helical (SST)	AR
46	WS-003-47	Washer (SST)	AR
47	00-067500-00031	O-Ring	AR
48	00-119244	Cap & Stud Assy	AR
49	00-435974	Bracket - Fill Piping	1
50	SC-041-12	Cap Screw 5/16-18 x 7/8 Hex Hd. (SST)	2
51	SC-041-11	Cap Screw 5/16-18 x 3/4 Hex Hd. (SST)	2
52	WS-029-05	Washer 0.328 x 0.750 x 0.062 (SST)	6
53	WL-006-23	Lockwasher 5/16 Helical (SST)	4
54	NS-015-11	Nut 5/16-18 Hex (SST)	4
55	00-271002-01	Solenoid Valve 3/4 (115 V.) (Incls. Items 56 & 57)	1

FILL AND OUTSIDE RINSE PIPING

ILLUS. PL-55257	PART NO.	NAME OF PART	AMT.
56	00-271838	Service Kit - Solenoid Valve	1
57	00-271839-01	Coil - Solenoid Valve	1
58	00-328764	Adapter & Elbow Weldment	1
59	00-067500-00012	O-Ring	4
*60	00-186922	Strainer - Line (3/4 In.) (Brass) (Apollo / Conbraco) (Incls. Items 61, 62, & 63) (Alternate to Item 6)	1
61	00-749802-00001	Cap	1
62	00-749802-00002	Gasket	1
63	00-749802-00003	Screen (80 Mesh)	1
**64	00-065890-00085	Line - Splice	2

* Kitz line strainer is approx. 1/4" shorter than Apollo / Conbraco.
** FRC64A Machines.

NOTES

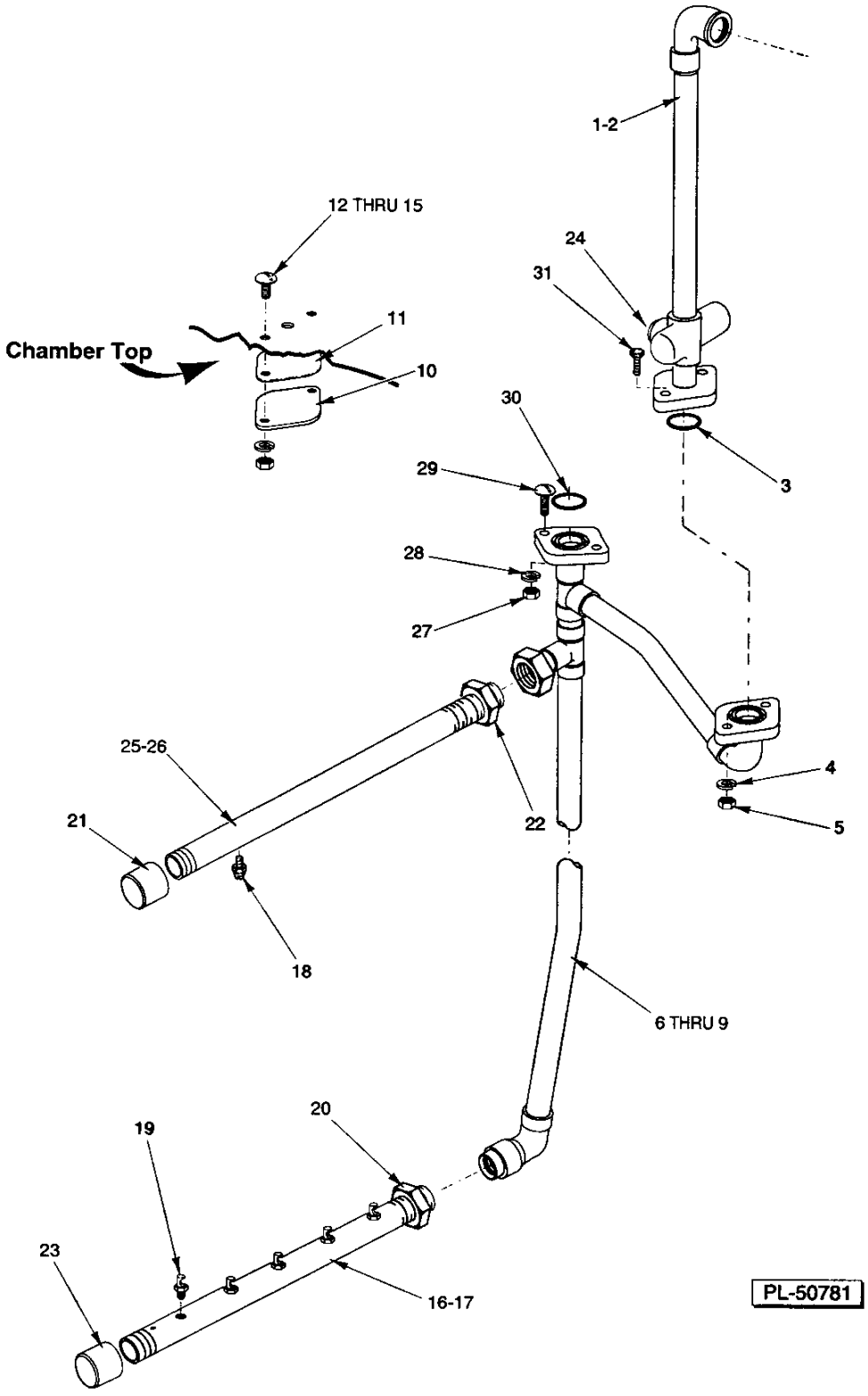

INSIDE METALLIC RINSE PIPING

INSIDE METALLIC RINSE PIPING

ILLUS. PL-50781	PART NO.	NAME OF PART	AMT.
1	00-329610-00001	Final Rinse Outside Piping (R-L)	1
2	00-329610-00002	Final Rinse Outside Piping (L-R)	1
3	00-067500-00012	O-Ring	2
4	WL-006-23	Lockwasher 5/16 Helical (SST)	2
5	NS-015-11	Nut 5/16-18 Hex (SST)	2
6	00-435979-00001	Final Rinse Inside Piping (R-L) (26 1/8 Door Height)	1
7	00-435979-00002	Final Rinse Inside Piping (L-R) (26 1/8 Door Height)	1
8	00-437132-00001	Final Rinse Inside Piping (R-L) (32 1/8 Door Height)	1
9	00-437132-00002	Final Rinse Inside Piping (L-R) (32 1/8 Door Height)	1
10	00-122402-00002	Flange	1
11	00-276407	Gasket - Rinse Pipe	1
12	SC-053-16	Mach. Screw 5/16-18 x 5/8 Truss Hd	2
13	SC-053-15	Mach. Screw 5/16-18 x 1/2 Slotted Truss Hd. (SST)	2
14	WL-006-23	Lockwasher 5/16 Helical (SST)	4
15	NS-015-11	Nut 5/16-18 Hex (SST)	4
16	00-271027-00001	Lower Rinse Arm (R-L) 5 Nozzles (Incls. Items 19, 20, & 23)	1
17	00-271027-00002	Lower Rinse Arm (L-R) 5 Nozzles (Incls. Items 19, 20, & 23)	1
18	00-081812	Nozzle - Rinse (Brass) (0.078 Dia. Orifice)	6
19	00-022731-00003	Nozzle - Rinse (SST) #50 Drill (0.070)	5
20	FP-030-27	Lock Nut 1/2 NPSL Pipe (Brass)	1
21	FP-029-08	Pipe Cap 1/2 (Brass)	1
22	FP-030-27	Lock Nut 1/2 NPSL Pipe (Brass)	1
23	FP-029-08	Pipe Cap 1/2 (Brass)	1
24	FP-028-03	Pipe Plug 1/8 Sq. Hd. (Brass)	1
25	00-271088-00001	Upper Rinse Arm (R-L) 6 Nozzles (Incls. Items 18, 21, & 22)	1
26	00-271088-00002	Upper Rinse Arm (L-R) 6 Nozzles (Incls. Items 18, 21, & 22)	1
27	NS-015-11	Nut 5/16-18 Hex (SST)	2
28	WL-006-23	Lockwasher 5/16 Helical (SST)	2
29	SC-053-18	Mach. Screw 5/16-18 x 7/8 Slotted Truss Hd. (SST)	2
30	00-067500-00012	O-Ring	1
31	SC-041-15	Cap Screw 5/16-18 x 11/4 Hex Hd	2

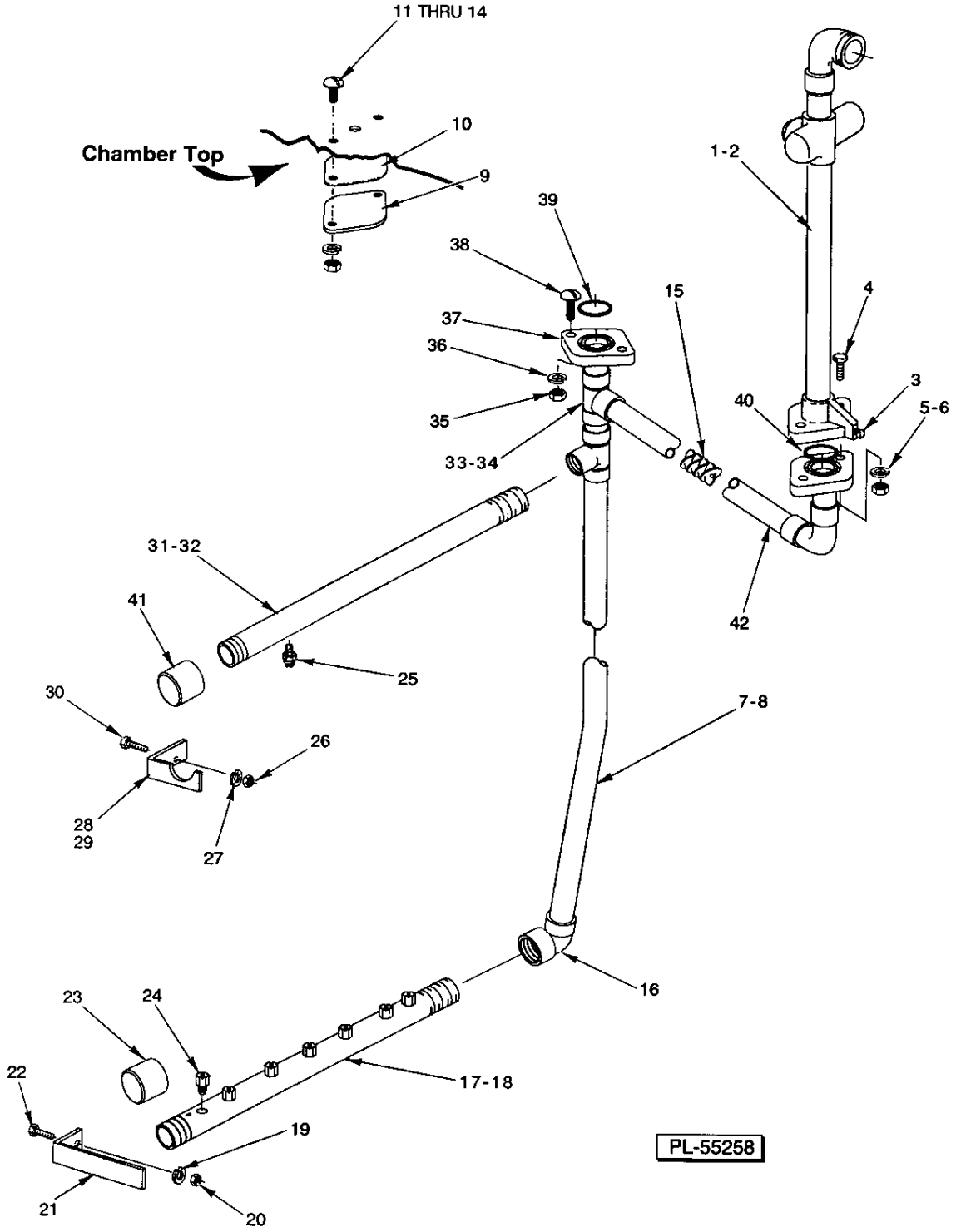

INSIDE RINSE PIPING (NON-METALLIC)

INSIDE RINSE PIPING (NON-METALLIC)

ILLUS. PL-55258	PART NO.	NAME OF PART	AMT.
1	00-329608-00001	Final Outside Rinse Piping (R-L)	1
2	00-329608-00002	Final Outside Rinse Piping (L-R)	1
3	FP-028-03	Pipe Plug 1/8 Sq. Hd. (Brass)	2
4	SC-041-15	Cap Screw 5/16-18 x 11/2 Hex Hd	2
5	WL-006-23	Lockwasher 5/16 Helical (SST)	2
6	NS-015-11	Nut 5/16-18 Hex (SST)	2
7	00-274708	Tube - Inside Rinse (321/8 Door Height)	1
8	00-274536	Tube - Inside Rinse (26 1/8 Door Height)	1
9	00-122402-00002	Flange	1
10	00-276407	Gasket - Rinse Pipe	1
11	SC-053-16	Mach. Screw 5/16-18 x 5/8 Truss Hd	2
12	SC-053-15	Mach. Screw 5/16-18 x 1/2 Slotted Truss Hd. (SST)	2
13	WL-006-23	Lockwasher 5/16 Helical (SST)	4
14	NS-015-11	Nut 5/16-18 Hex (SST)	4
15	00-435070	Mixer - Spiral	1
16	00-185781	Elbow - 1/2 x 90 Deg. (PVC)	2
17	00-476504-00001	Lower Rinse Arm (R-L) 7 Nozzles (Incls. Items 23 & 24)	1
18	00-476504-00002	Lower Rinse Arm (L-R) 7 Nozzles (Incls. Items 23 & 24)	1
19	WL-006-16	Lockwasher 1/4 Helical (SST)	2
20	NS-015-01	Nut 1/4-20 Hex (SST)	2
21	00-274570	Bracket	1
22	SC-128-05	Mach. Screw 1/4-20 x 1/2 Fil. Hd. (SST)	2
23	00-276380-00002	Cap - Lower Rinse Arm	1
24	00-476369	Nozzle - Rinse (SST) #50 Drill (0.070)	7
25	00-081812-00002	Nozzle - Rinse (SST) (0.078 Dia. Orifice)	6
26	NS-015-01	Nut 1/4-20 Hex (SST)	2
27	WL-006-16	Lockwasher 1/4 Helical (SST)	2
28	00-274532-00001	Bracket (R-L)	1
29	00-274532-00002	Bracket (L-R)	1
30	SC-024-06	Mach. Screw 1/4-20 x 1/2 Slotted Fil. Hd. (SST)	2
31	00-274535	Upper Rinse Arm (R-L) 6 Nozzles (Incls. Items 25 & 41)	1
32	00-274535-00002	Upper Rinse Arm (L-R) 6 Nozzles (Incls. Items 25 & 41)	1
33	FP-085-51	Tee 1/2 x 1/2 x 1/2 NPT Schedule 80 (PVC)	2
34	00-274531-00002	Tube (1 1/4 Lg.)	1
35	NS-015-11	Nut 5/16-18 Hex (SST)	2
36	WL-006-23	Lockwasher 5/16 Helical (SST)	2
37	00-274533	Flange	2
38	SC-053-18	Mach. Screw 5/16-18 x 7/8 Slotted Truss Hd. (SST)	2
39	00-067500-00012	O-Ring	1
40	00-067500-00012	O-Ring	2
41	00-276380-00002	Cap - Upper Rinse Arm	1
42	00-274531-00003	Tube - Inside Rinse 15 1/8 Lg	1

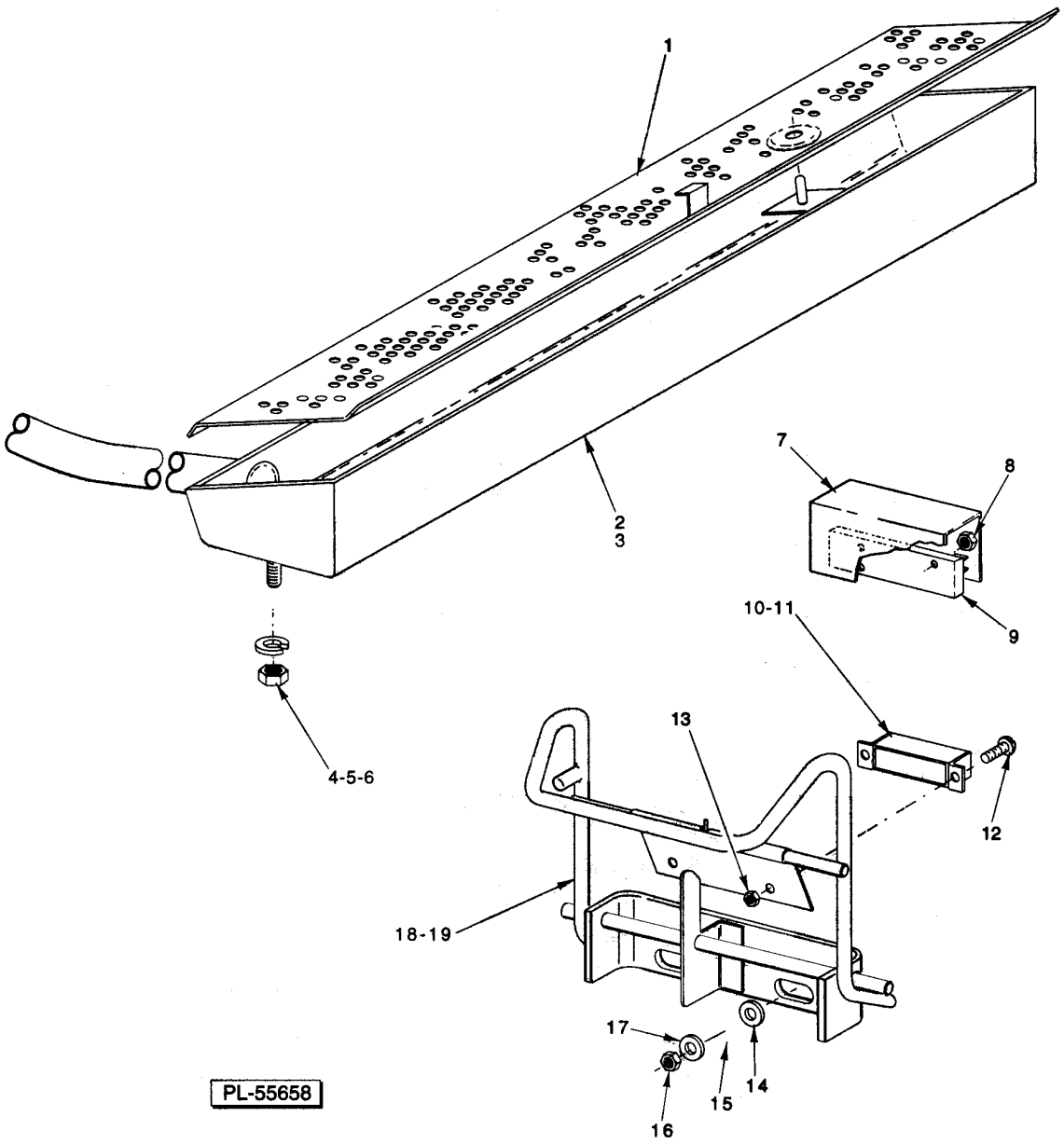

ACTUATOR MECHANISM AND RINSE DRAIN-OFF PAN

ACTUATOR MECHANISM AND RINSE DRAIN-OFF PAN

ACTUATOR MECHANISM AND RINSE DRAIN-OFF PAN

ILLUS. PL-55658	PART NO.	NAME OF PART	AMT.
1	00-812922-00001	Strainer	1
2	00-329579-00005	Rinse Pan Assy. (L-R)	1
3	00-329579-00006	Rinse Pan Assy. (R-L)	1
4	WS-003-49	Washer 0.266 x 0.563 x 0.062 (SST)	2
5	WL-006-17	Lockwasher 1/4 Helical (SST)	2
6	NS-015-01	Nut 1/4 Hex (SST)	2
7	00-270996	Insulator - Switch	1
8	NS-031-50	Stop Nut 6-32 Hex (SST)	2
9	00-892896	Kit - Service Reed Switch	1
10	00-290160	Magnet (Dot Not Visible)	1
11	00-290159	Retainer - Magnet	1
12	SC-127-26	Mach. Screw 6-32 x 3/8 Phil. Rd. Hd. (SST)	2
13	NS-031-50	Stop Nut 6-32 Hex (SST)	2
14	WS-017-08	Washer (0.328 x 0.625 x 0.062) (SST)	2
15	WL-006-23	Lockwasher 5/16 Helical (SST)	2
16	NS-036-19	Stop Nut 5/16-18	2
17	WS-029-05	Washer 0.328 x 0.750 x 0.062 (SST)	2
18	00-436027	Actuator (L-R)	1
19	00-436955	Actuator (R-L)	1

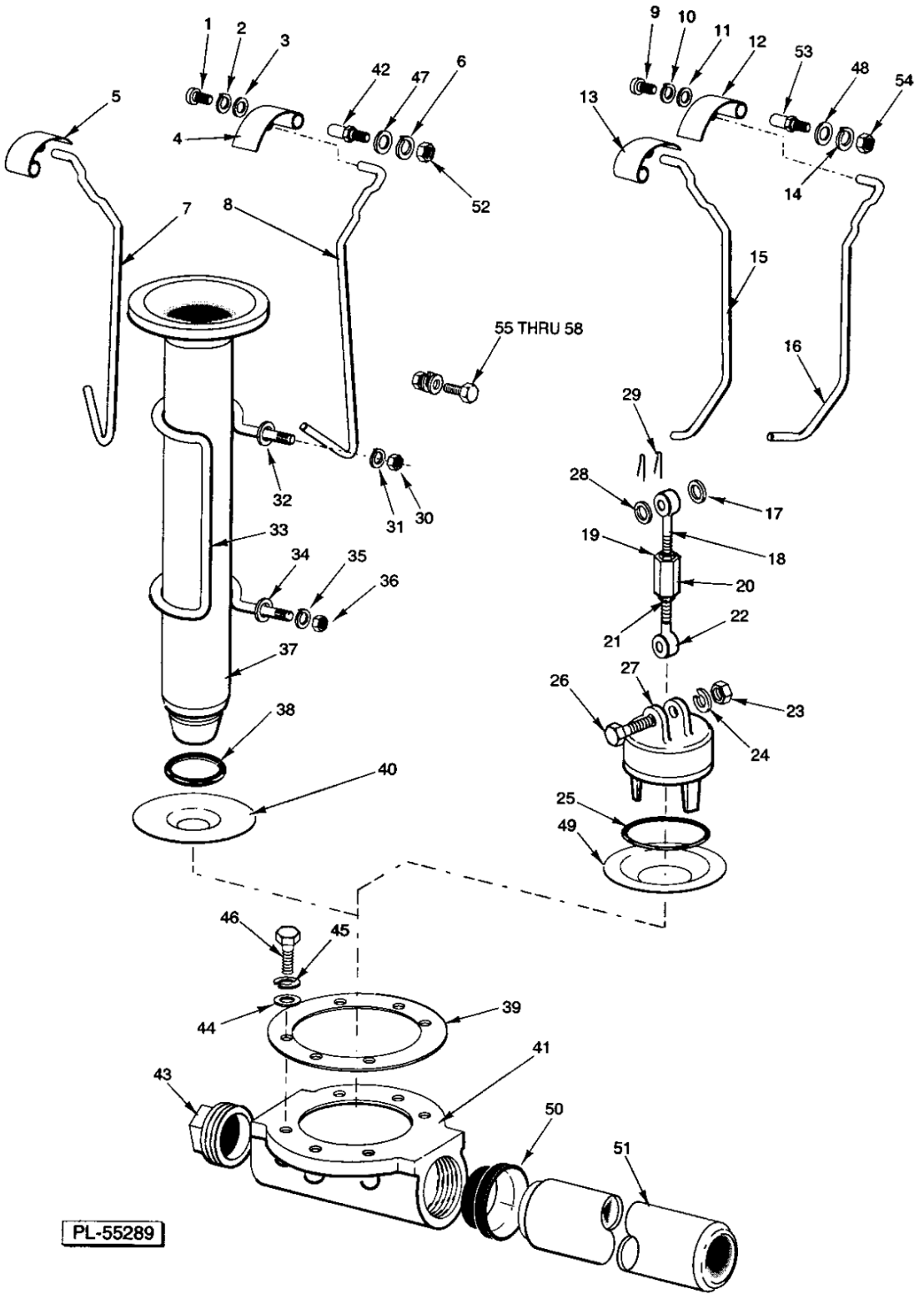

DRAIN UNIT
(WASH/RINSE SECTION)

DRAIN UNIT
(WASH/RINSE SECTION)

ILLUS. PL-55289	PART NO.	NAME OF PART	AMT.
1	SC-021-22	Mach. Screw 10-24 x 3/8 Slotted Rd. Hd. (SST)	2
2	WL-006-07	Lockwasher #10 Helical (SST)	2
3	WS-023-34	Washer (SST)	2
4	00-271070	Drain Lever (RH)	1
5	00-274096	Drain Lever (LH)	1
6	WL-006-17	Lockwasher 1/4 Helical (SST)	2
7	00-436953	Lift Rod Overflow (LH)	1
8	00-436954	Lift Rod Overflow (RH)	1
*9	SC-021-22	Mach. Screw 10-24 x 3/8 Slotted Rd. Hd. (SST)	2
*10	WL-006-07	Lockwasher #10 Helical (SST)	2
*11	WS-023-34	Washer (SST)	2
*12	00-271070	Drain Lever (RH)	1
*13	00-274096	Drain Lever (LH)	1
*14	WL-006-17	Lockwasher 1/4 Helical (SST)	2
*15	00-436961	Lift Rod - Drain (LH)	1
*16	00-436962	Lift Rod - Drain (RH)	1
*17	WS-017-08	Washer (0.328 x 0.625 x 0.062) (SST)	2
*18	00-065958	Pull Rod	2
*19	NS-018-06	Jam Nut 5/16-18 Hex Fin	2
*20	00-016269	Nut - Pull Rod Adjustor	2
*21	NS-018-06	Jam Nut 5/16-18 Hex Fin	2
*22	00-065958	Pull Rod	2
*23	NS-015-11	Nut 5/16-18 Hex (SST)	2
*24	WL-006-23	Lockwasher 5/16 Helical (SST)	2
*25	00-067500-00118	O-Ring	2
*26	SC-041-17	Cap Screw 5/16-18 x 11/2 Hex Hd. (SST)	2
*27	00-077466	Plug - Drain	2
*28	WS-017-08	Washer (0.328 x 0.625 x 0.062) (SST)	2
*29	PC-005-02	Cotter Pin 1/16 x 1/2 (SST)	4
30	NS-015-11	Nut 5/16-18 Hex (SST)	4
31	WL-006-23	Lockwasher 5/16 Helical (SST)	2
32	WS-017-01	Washer 0.328 x 0.875 x 0.062 (SST)	4
33	00-270952-00002	Retainer	2
34	WS-017-01	Washer 0.328 x 0.875 x 0.062 (SST)	4
35	WL-006-23	Lockwasher 5/16 Helical (SST)	2
36	NS-015-11	Nut 5/16-18 Hex (SST)	4
37	00-119099-00002	Tube - Overflow	2
38	00-067500-00120	O-Ring	2
39	00-289464	Gasket - Drain	2
40	00-270947	Sleeve - Drain Body	2
41	00-289465	Drain Body	2
42	00-119116	Axle - Drain Lever	2
43	FP-028-32	Pipe Plug 2 Sq. Hd	1
44	WS-006-44	Washer (SST)	12
45	WL-006-28	Lockwasher 3/8 Helical (SST)	12
46	SC-041-30	Cap Screw 3/8-16 x 1 Hex Hd. (SST)	12
47	WS-022-01	Washer (SST)	2
*48	WS-022-01	Washer (SST)	2
*49	00-106283	Sleeve - Drain Valve Body	1
50	00-328813	Bushing - Drain	2
51	00-274132-00005	Drain Pipe - Wash/Rinse Section	1
52	NS-015-01	Nut 1/4-20 Hex (SST)	2
*53	00-119116	Axle - Drain Lever	2
*54	NS-015-01	Nut 1/4-20 Hex (SST)	2
55	SC-041-11	Cap Screw 5/16-18 x 3/4 Hex Hd. (SST)	AR
56	WS-017-01	Washer 0.328 x 0.875 x 0.062 (SST)	AR
57	WL-006-23	Lockwasher 5/16 Helical (SST)	AR
58	NS-015-11	Nut 5/16-18 Hex (SST)	AR

* Use in wash/rinse tank on machines with RS or PW.

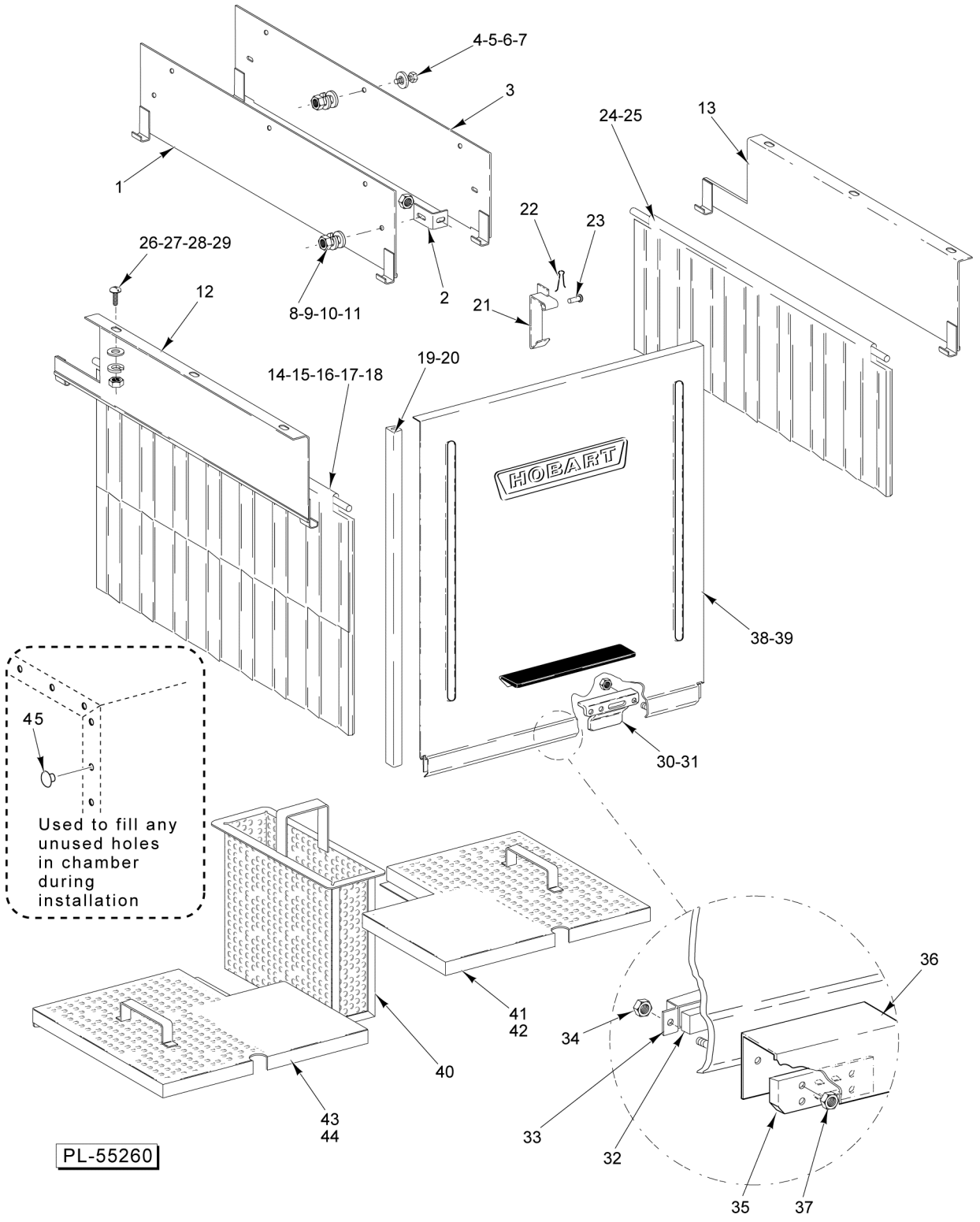

DOORS, CURTAINS, BAFFLES, AND STRAINERS

DOORS, CURTAINS, BAFFLES, AND STRAINERS

ILLUS. PL-55260	PART NO.	NAME OF PART	AMT.
1	00-435963-00001	Baffle - Center	1
2	00-289828	Bracket	2
3	00-435962-00001	Baffle - Center	1
4	SC-041-05	Cap Screw 1/4-20 x 5/8 Hex Hd	10
5	WS-003-49	Washer 0.266 x 0.563 x 0.062 (SST)	13
6	WL-006-17	Lockwasher 1/4 Helical (SST)	11
7	NS-015-01	Nut 1/4-20 Hex (SST)	11
8	SC-041-05	Mach. Screw 1/4-20 x 5/8 Hex Hd. (SST)	2
9	WS-022-01	Washer (SST)	2
10	WL-006-17	Lockwasher 1/4 Helical (SST)	2
11	NS-015-01	Nut 1/4-20 Hex (SST)	2
12	00-436959-00001	Baffle - Final Rinse (R-L)	1
13	00-435982-00001	Baffle - Final Rinse (L-R)	1
14	00-271084	Splash Curtain (261/8 Door Height)	4
15	00-271084-00002	Splash Curtain (32-1/8 Door Height)	4
16	00-120266-00001	Curtain Rod	4
17	00-120152-00055	Splash Curtain Assy. (26-1/8 Door Height)	AR
18	00-120152-00056	Splash Curtain Assy. (32-1/8 Door Height)	AR
19	00-112378-00049	Door Slide (26-1/8 Door Height)	4
20	00-112378-00050	Door Slide (32-1/8 Door Height)	4
21	00-185864	Catch - Door	2
22	PC-005-02	Cotter Pin 1/16 x 1/2 (SST)	2
23	00-012114	Pin	2
24	00-120151-00001	Splash Curtain (10-C1)	1
25	00-120266-00001	Curtain Rod	1
26	SC-053-42	Mach. Screw 1/4-20 x 5/8 Truss Hd. (SST)	6
27	WS-022-01	Washer (SST)	6
28	WL-006-17	Lockwasher 1/4 Helical (SST)	6
29	NS-015-01	Nut 1/4-20 Hex (SST)	6
30	00-328065	Actuator - Lift Drain	2
31	NS-031-21	Stop Nut 1/4-20 Hex (SST)	4
32	00-290160	Magnet	2
33	00-290159	Retainer - Magnet	2
34	NS-031-50	Stop Nut 6-32 Hex (SST)	4
35	00-892896	Reed Mounting Board Assy	2
36	00-270996	Insulator - Switch	2
37	NS-031-50	Stop Nut 6-32 Hex (SST)	4
38	00-328064-00007	Door (26-1/8)	1
39	00-328079-00007	Door (32-1/8)	1
40	00-271100	Bucket - Strainer	2
41	00-435941	Strainer - Front (RH)	1
42	00-436034	Strainer - Rear (RH) (Not Shown)	1
43	00-435943	Strainer - Front (LH)	1
44	00-435939	Strainer - Rear (LH) (Not Shown)	1
45	00-289082	Kit - Plug (Incls. 30 Plugs & RTV)	AR

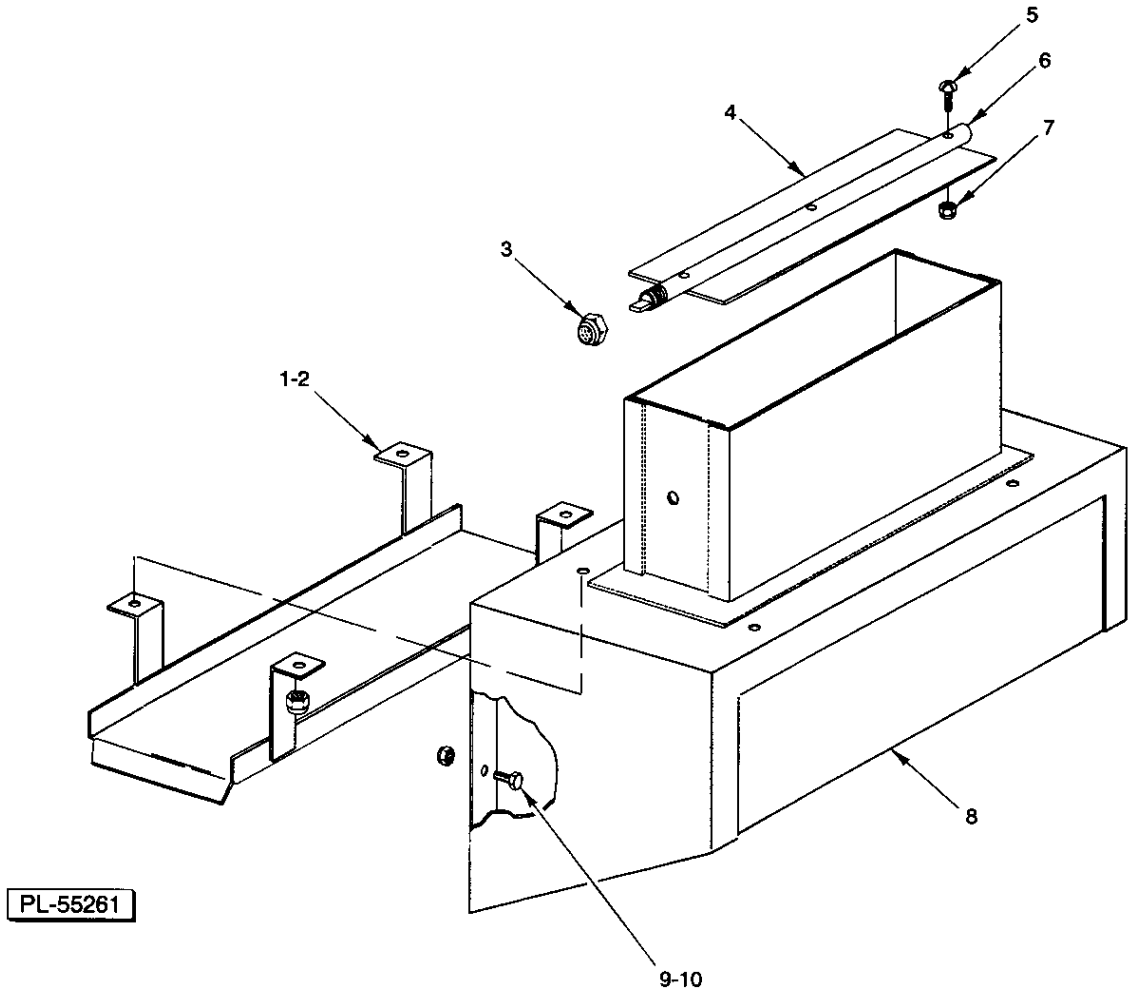

VENT HOOD

VENT HOOD

ILLUS. PL-55261	PART NO.	NAME OF PART	AMT.
1	00-435799	Drip Shield Assy	1
2	NS-031-15	Stop Nut 10-24 Hex (SST)	4
3	NS-036-12	Stop Nut 3/8-24 Hex Special (SST)	1
4	00-075623	Damper - Vent Stack	1
5	SC-125-25	Mach. Screw 6-32 x 3/4 Phil. Rd. Hd. (SST)	3
6	00-064919	Shaft - Damper	1
7	NS-031-50	Stop Nut 6-32 Hex (SST)	3
8	00-435794-00001	Vent Hood Assy. (Incls. Items 1 thru 7)	1
9	SC-041-05	Cap Screw 1/4-20 x 5/8 Hex Hd	11
10	NS-031-19	Stop Nut 1/4-20 Elastic (SST)	11

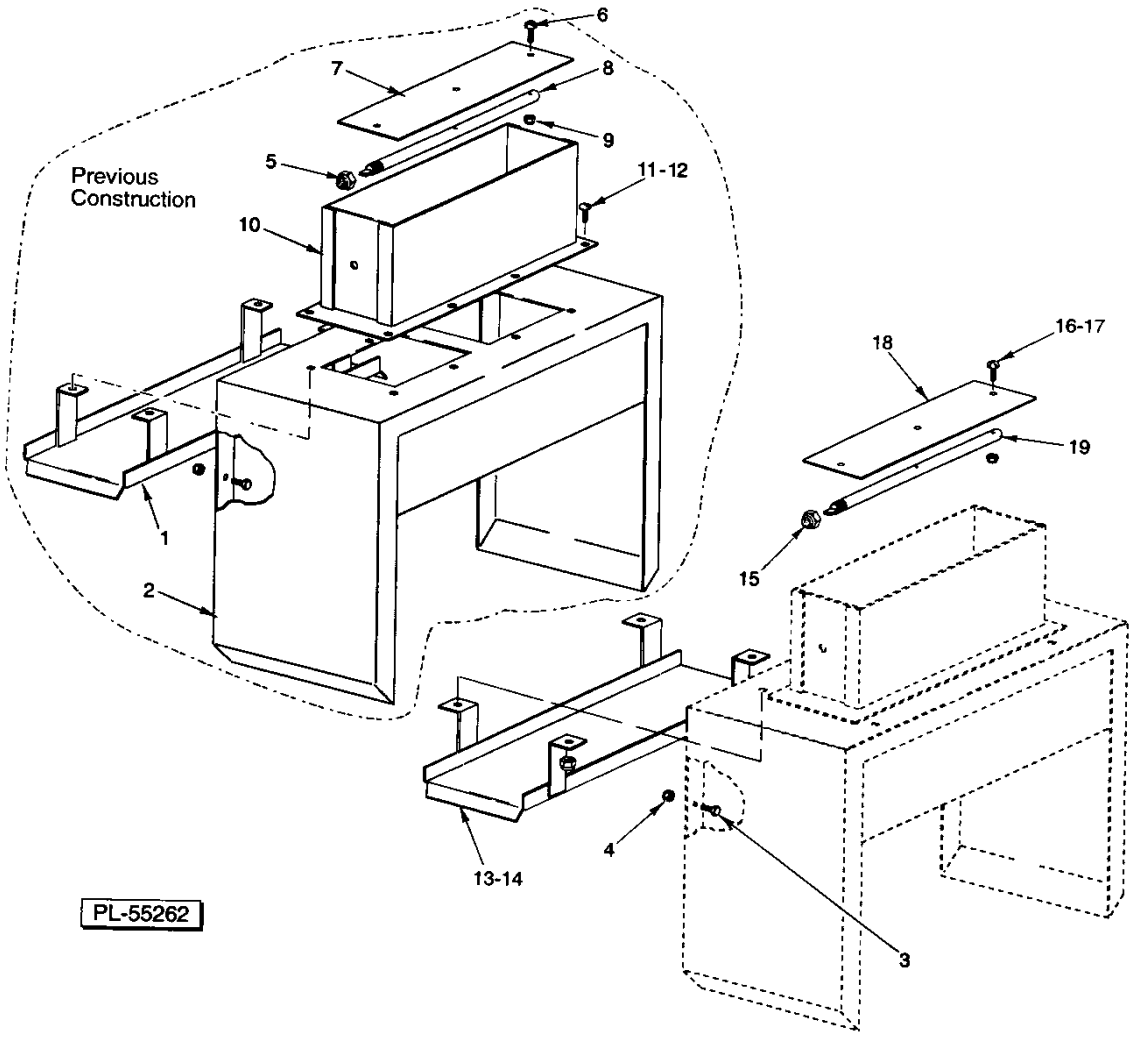

EXTENDED HOOD

EXTENDED HOOD

ILLUS. PL-55262	PART NO.	NAME OF PART	AMT.
1	00-080553	Drip Shield Assy	1
2	00-079463-00002	Extended Hood Assy	1
3	SC-041-05	Cap Screw 1/4-20 x 5/8 Hex Hd	13
4	NS-031-19	Stop Nut 1/4-20 Elastic (SST)	13
5	NS-036-12	Stop Nut 3/8-24 Hex Special (SST)	1
6	SC-125-25	Mach. Screw 6-32 x 3/4 Phil. Rd. Hd. (SST)	3
7	00-075623	Damper - Vent Stack	1
8	00-064919	Shaft - Damper	1
9	NS-031-50	Stop Nut 6-32 Hex (SST)	3
10	00-075621	Vent Stack Assy	1
11	SC-053-02	Mach. Screw 10-24 x 1/2 Slotted Truss Hd. (SST)	8
12	NS-031-15	Stop Nut 10-24 Elastic (SST)	8
13	00-435799	Drip Shield Assy	1
14	NS-031-15	Stop Nut 10-24 Hex (SST)	4
15	NS-036-12	Stop Nut 3/8-24 Hex Special (SST)	1
16	SC-125-25	Mach. Screw 6-32 x 3/4 Phil. Rd. Hd. (SST)	3
17	NS-031-50	Stop Nut 6-32 Hex (SST)	3
18	00-075623	Damper - Vent Stack	1
19	00-064919	Shaft - Damper	1

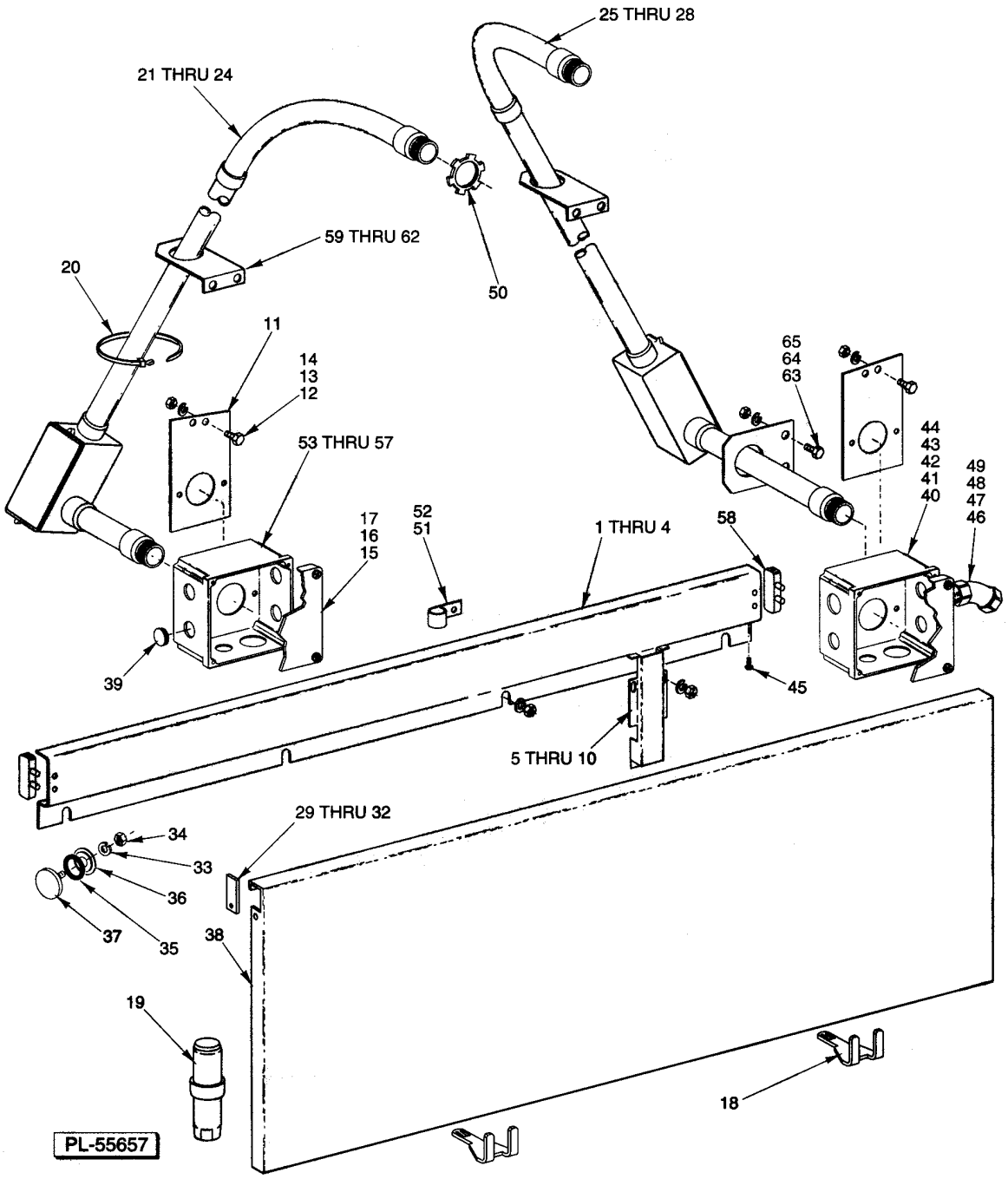

MISCELLANEOUS
(WASH/RINSE SECTION)

MISCELLANEOUS
(WASH/RINSE SECTION)

MISCELLANEOUS
(WASH/RINSE SECTION)

ILLUS. PL-55657	PART NO.	NAME OF PART	AMT.
1	00-436032	Wireway - Horizontal	1
2	WS-017-06	Washer (SST)	4
3	WL-006-17	Lockwasher 1/4 Helical (SST)	4
4	NS-015-01	Nut 1/4-20 Hex (SST)	4
5	00-271055	Wireway - Vertical	1
6	SC-021-22	Mach. Screw 10-24 x 3/8 Slotted Rd. Hd. (SST)	1
7	WL-006-07	Lockwasher #10 Helical (SST)	1
8	WS-017-06	Washer (SST)	2
9	WL-006-17	Lockwasher 1/4 Helical (SST)	2
10	NS-015-01	Nut 1/4-20 Hex (SST)	2
11	00-436024	Plate - Junction Box Support	2
12	SC-041-11	Cap Screw 5/16-18 x 3/4 Hex Hd. (SST)	4
13	WL-006-23	Lockwasher 5/16 Helical (SST)	4
14	NS-015-11	Nut 5/16-18 Hex (SST)	4
15	00-288465	Lid & Gasket Assy. (Incls. Item 16)	2
16	00-112007	Gasket	2
17	SD-012-20	Self-Tapping Screw 8-32 x 1/2 Phil. Truss Hd., Type T	8
18	00-271061	Support	2
19	00-288946-00002	Foot - Adjustable	4
20	00-122577-00002	Wire Tie	6
21	00-436941	Conduit - PVC (26 1/8 Door Height) (LH) (Electric and Steam Heat)	1
22	00-437131	Conduit - PVC (32 1/8 Door Height) (LH) (Electric and Steam Heat)	1
23	00-328470-00001	Conduit - PVC (26 1/8 Door Height) (LH) (Gas Heat)	1
24	00-328470-00002	Conduit - PVC (32 1/8 Door Height) (LH) (Gas Heat)	1
25	00-436037	Conduit - PVC (26 1/8 Door Height) (RH) (Electric and Steam Heat)	1
26	00-437130	Conduit - PVC (32 1/8 Door Height) (RH) (Electric and Steam Heat)	1
27	00-328469-00001	Conduit - PVC (26 1/8 Door Height) (RH) (Gas Heat)	1
28	00-328469-00002	Conduit - PVC (32 1/8 Door Height) (RH) (Gas Heat)	1
29	00-436888	Cover - Panel Notch	2
30	SC-053-05	Mach. Screw 10-24 x 3/8 Slotted Truss Hd. (SST)	2
31	WS-019-06	Washer (SST)	2
32	NS-031-16	Stop Nut 10-24 Elastic (SST)	2
33	WL-006-17	Lockwasher 1/4 Helical (SST)	2
34	NS-015-01	Nut 1/4-20 Hex (SST)	2
35	00-067500-00031	O-Ring	2
36	00-119254	Retainer - Cap	2
37	00-119244	Cap & Stud Assy	2
38	00-436031	Panel - Front Trim	1
39	PB-004-08	Plug Button Heyco #2703	AR
40	00-270923-00004	Box - Junction (RH)	1
41	SC-041-05	Cap Screw 1/4-20 x 5/8 Hex Hd	2
42	WS-003-49	Washer 0.266 x 0.563 x 0.062 (SST)	2
43	WL-006-17	Lockwasher 1/4 Helical (SST)	2
44	NS-015-01	Nut 1/4-20 Hex (SST)	2
45	SD-007-38	Self-Tapping Screw 8 x 1/4 Phil. Bind Hd., Type B	2
46	FE-008-44	Connector 45 Deg. (3/4 Male Thd. x 3/4 Thinwall)	1
47	FE-008-11	Gasket - Electrical	1
48	FE-006-06	Lock Nut 3/4	1
49	FE-007-32	Connector - Conduit 3/4 TS	1
50	FE-009-07	Lock Nut 11/4	4
51	00-294677-00003	Clamp - Wire (3/4 I.D.)	AR
52	NS-047-94	Lock Nut Special 3/16	AR
53	00-270923-00005	Box - Junction (LH)	1
54	SC-041-05	Cap Screw 1/4-20 x 5/8 Hex Hd	2
55	WS-003-49	Washer 0.266 x 0.563 x 0.062 (SST)	2

MISCELLANEOUS
(WASH/RINSE SECTION)

ILLUS. PL-55657	PART NO.	NAME OF PART	AMT.
56	WL-006-17	Lockwasher 1/4 Helical (SST)	2
57	NS-015-01	Nut 1/4-20 Hex (SST)	2
58	00-271057	NLA - Obsolete--Cap - Wireway	2
59	SC-041-50	Cap Screw 1/4-20 x 1/2 Hex Hd. (SST)	4
60	WS-022-01	Washer (SST)	4
61	WL-006-17	Lockwasher 1/4 Helical (SST)	4
62	NS-015-01	Nut 1/4-20 Hex (SST)	4
63	SC-041-11	Cap Screw 5/16-18 x 3/4 Hex Hd. (SST)	2
64	WL-006-23	Lockwasher 5/16 Helical (SST)	2
65	NS-015-11	Nut 5/16-18 Hex (SST)	2

NOTES

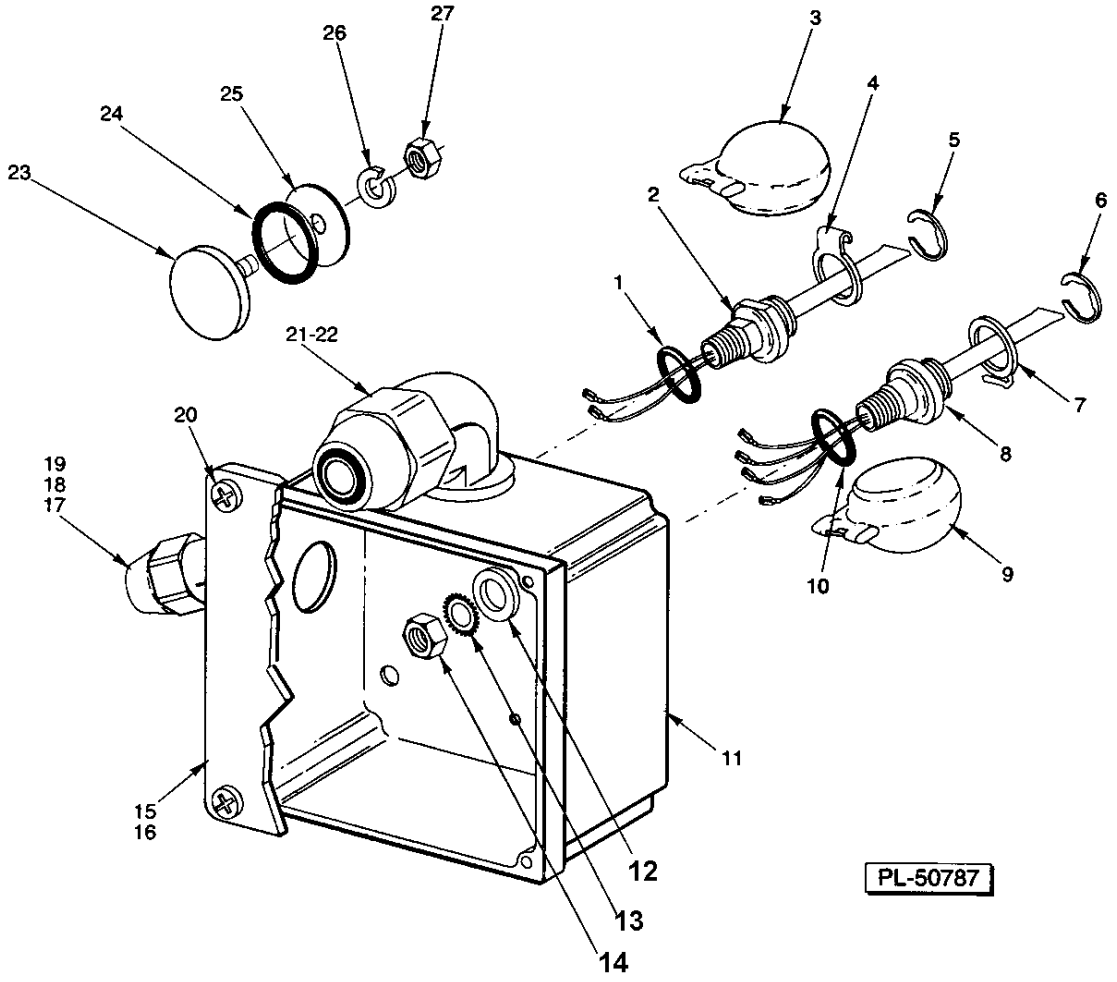

LOW WATER PROTECTION
(STEAM HEAT/WASH AND RINSE TANK)

LOW WATER PROTECTION
(STEAM HEAT/WASH AND RINSE TANK)

ILLUS. PL-50787	PART NO.	NAME OF PART	AMT.
1	00-067500-00072	O-Ring	AR
2	00-271622	Probe & Switch Assy. (2 Wire) (Water Level)	AR
3	00-122674	Float Assy	AR
4	00-112467	Retainer - Float	AR
5	RR-010-13	Retaining Ring	AR
6	RR-010-13	Retaining Ring	2
7	00-112467	Retainer - Float	2
8	00-271621	Switch & Probe Assy. (4-Wire) (Long)	2
9	00-122674	Float Assy	2
10	00-067500-00072	O-Ring	2
11	00-328472	Box - Steam Heat	2
12	WS-010-40	Washer - Thrust	AR
13	WL-014-31	Lockwasher 1/2 External Shakeproof (SST)	AR
14	NS-018-28	Jam Nut 1/2-20 Hex Fin	AR
15	00-288465	Lid & Gasket Assy. (Incls. Item 16)	2
16	00-112007	Gasket	2
17	FE-024-61	Connector 45 Deg. (Non-Metallic) Sealtite (1/2 Male Thd. x 1/2 Flex. Cnd.)	2
18	FE-024-61	Connector 45 Deg. (Non-Metallic) Sealtite (1/2 Male Thd. x 1/2 Flex. Cnd.)	1
19	FE-024-65	Connector 90 Deg. (Non-Metallic) Sealtite (1/2 Male Thd. x 1/2 Flex. Cnd.)	1
20	SD-012-20	Self-Tapping Screw 8-32 x 1/2 Phil. Truss Hd., Type T	8
21	FE-024-67	Connector 90 Deg. (Non-Metallic) Sealtite (1 Male Thd. x 1 Flex. Cnd.)	4
22	FE-008-12	Gasket	2
*23	00-119244-00002	Cap & Stud Assembly	AR
*24	00-067500-00031	O-Ring	AR
*25	WS-003-47	Washer (SST)	AR
*26	WL-006-17	Lockwasher 1/4 Helical (SST)	AR
*27	NS-015-01	Nut 1/4-20 Hex (SST)	AR
	00-294357-00001	Connector	AR
	00-294357-00002	Connector (Black)	AR
	00-065890-00029	Connector - Insulated	AR

* Use one set on FRC86A or FRC100A in place of items 1 thru 5 in wash tank and one set in rinse tank on all units.

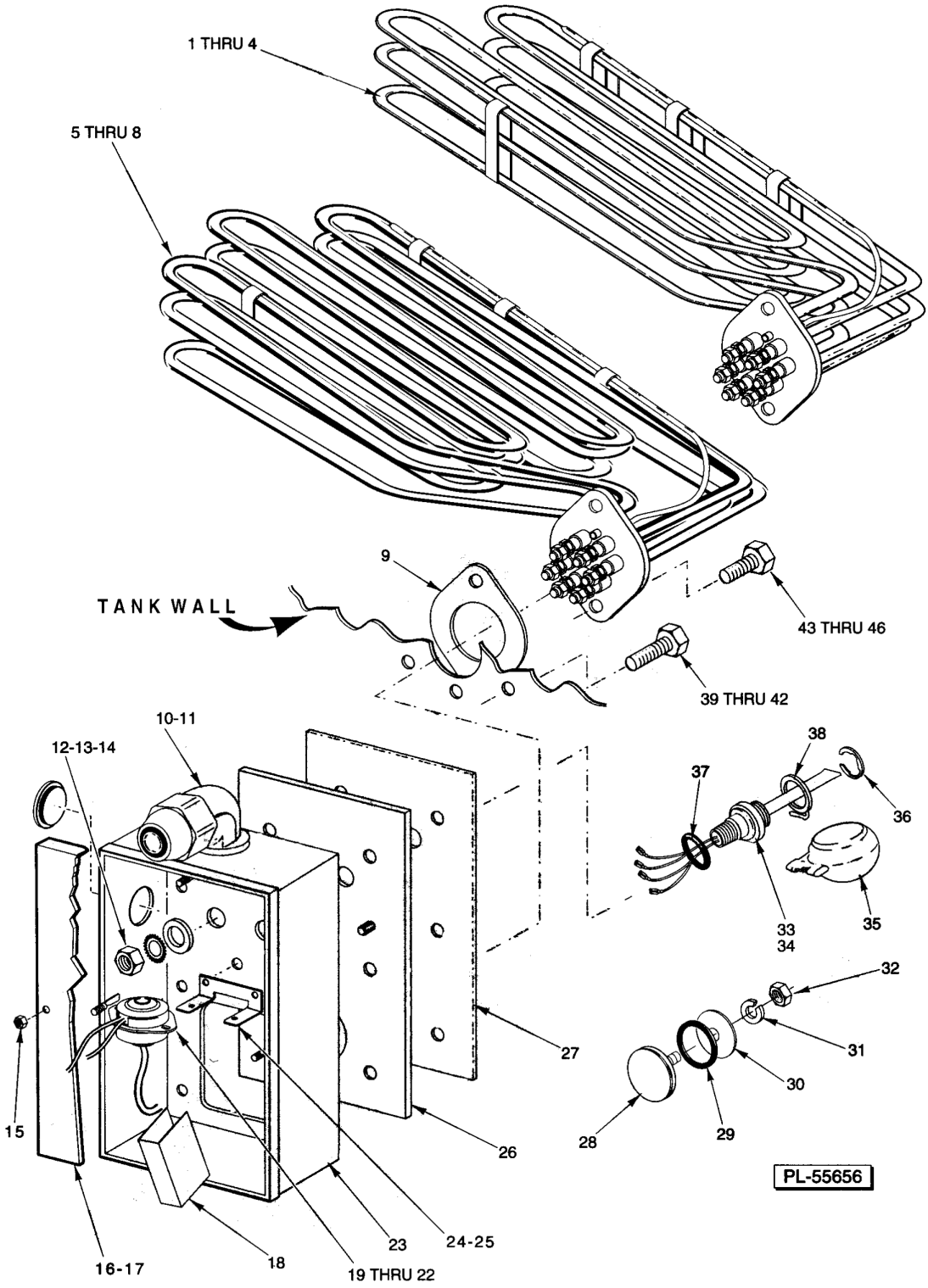

ELECTRIC HEAT

ELECTRIC HEAT

ELECTRIC HEAT

ILLUS. PL-55656	PART NO.	NAME OF PART	AMT.
1	00-436907-00002	Heater - Tank Electric (10K W/Rinse) (240 V., 50/60 Hz.) (3 Ph.)	1
2	00-436907-00005	Heater - Tank Electric (10K W/Rinse) (480 V., 60 Hz.) (3 Ph.)	1
3	00-436907-00006	Heater - Tank Electric (10K W/Rinse) (380 V., 50 Hz.) (3 Ph.)	1
4	00-436907-00001	Heater - Tank Electric (10K W/Rinse) (208 V., 60 Hz./200 V., 50 Hz.) (3 Ph.)	1
5	00-435990-00001	Heater - Tank Electric (15K W/Wash) (208 V., 60 Hz./200 V., 50 Hz.) (3 Ph.)	1
6	00-435990-00002	Heater - Tank Electric (15K W/Wash) (240 V., 50/60 Hz.) (3 Ph.)	1
7	00-435990-00005	Heater - Tank Electric (15K W/Wash) (480 V., 60 Hz.) (3 Ph.)	1
8	00-435990-00006	Heater - Tank Electric (15K W/Wash) (380 V., 50 Hz.) (3 Ph.)	1
9	00-293598	Gasket - Heater Mounting	2
10	FE-008-12	Gasket	2
11	FE-024-63	Connector 90 Deg. (Non-Metallic) Sealtite (1 Male Thd. x 1 Flex. Cnd.)	4
12	WS-010-40	Washer - Thrust	AR
13	WL-014-31	Lockwasher 1/2 External Shakeproof (SST)	AR
14	NS-018-28	Jam Nut 1/2-20 Hex Fin	AR
15	NS-031-15	Stop Nut 10-24 Hex (SST)	12
16	00-474574-00002	Lid & Gasket Assy. (Incls. Item 16)	2
17	00-474569	Gasket (Lid)	2
18	00-950696	Insulator - Terminal (Above 250 V.)	2
19	00-293946	Sleeve	2
20	00-271123	Protector - High Limit	2
21	SC-021-08	Mach. Screw 6-32 x 3/8 Slotted Rd. Hd. (SST)	4
22	NS-031-50	Stop Nut 6-32 Hex (SST)	4
23	00-474512-00003	Box - Electric Heat	2
24	00-271122	Bracket - Thermostat	2
25	NS-031-15	Stop Nut 10-24 Hex (SST)	4
26	00-271118-00001	Plate - Mounting	2
27	00-271109	Gasket - Mounting	2
*28	00-119244-00002	Cap & Stud Assembly	AR
*29	00-067500-00031	O-Ring	AR
*30	WS-003-47	Washer (SST)	AR
*31	WL-006-17	Lockwasher 1/4 Helical (SST)	AR
*32	NS-015-01	Nut 1/4-20 Hex (SST)	AR
33	00-271621	Switch & Probe Assy. (4-Wire) (Long)	2
34	00-271622	Probe & Switch Assy. (2 Wire) (Water Level)	AR
35	00-122674	Float Assy	AR
36	RR-010-13	Retaining Ring	AR
37	00-067500-00072	O-Ring	AR
38	00-112467	Retainer - Float	AR
39	SC-041-15	Cap Screw 5/16-18 x 11/4 Hex Hd	12
40	WS-029-05	Washer 0.328 x 0.750 x 0.062 (SST)	24
41	WL-006-23	Lockwasher 5/16 Helical (SST)	12
42	NS-015-11	Nut 5/16-18 Hex (SST)	12
43	SC-041-13	Cap Screw 5/16-18 x 1 Hex Hd. (SST)	4
44	WS-017-08	Washer (0.328 x 0.625 x 0.062) (SST)	4
45	WL-006-23	Lockwasher 5/16 Helical (SST)	4
46	NS-015-11	Nut 5/16-18 Hex (SST)	4
	00-526454	Foam Tape	AR
	00-545595	Sealer (1/8 Rd.)	AR
	00-294357-00001	Connector	AR
	00-294357-00002	Connector (Black)	AR
	00-065890-00029	Connector - Insulated	2

* Use one set on FRC86A or FRC100A machines in place of item 34 in wash tank and one set in rinse tank on all units.

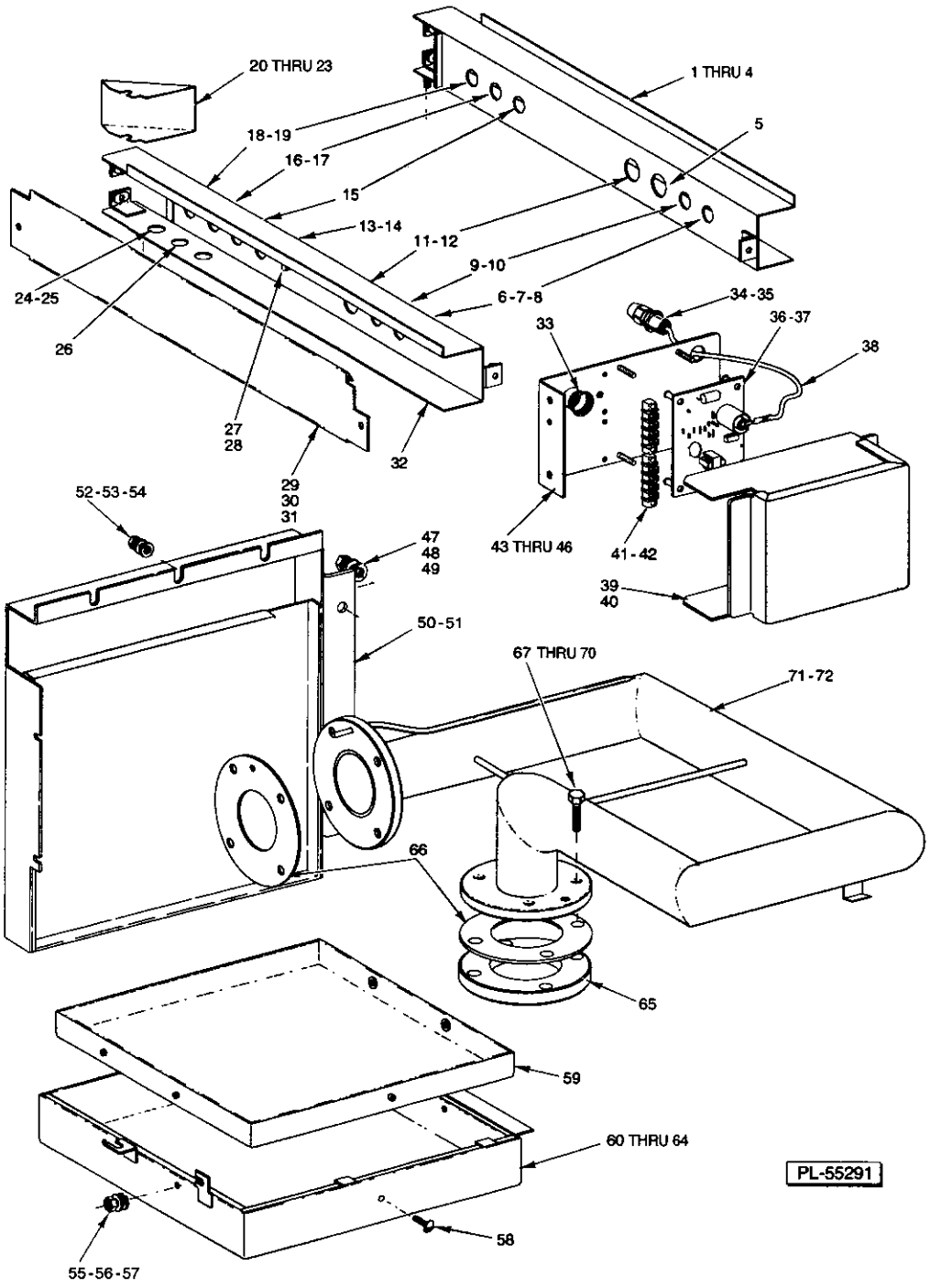

GAS HEAT BURNERS, FLUES, AND WIREWAYS

GAS HEAT BURNERS, FLUES, AND WIREWAYS

ILLUS. PL-55291	PART NO.	NAME OF PART	AMT.
1	00-328461	Channel - Wireway (RH)	1
2	SC-041-10	Cap Screw 5/16-18 x 5/8 Hex Hd. (SST)	2
3	SC-041-11	Cap Screw 5/16-18 x 3/4 Hex Hd. (SST)	4
4	WL-006-23	Lockwasher 5/16 Helical (SST)	6
5	FE-024-58	Connector Straight (Non-Metallic) Sealtite (3/4 Male Thd. x 3/4 Flex. Cnd.)	2
6	FE-024-57	Connector Straight (Non-Metallic) Sealtite (1/2 Male Thd. x 1/2 Flex. Cnd.)	2
7	FE-024-61	Connector 45 Deg. (Non-Metallic) Sealtite (1/2 Male Thd. x 1/2 Flex. Cnd.)	2
8	FE-008-10	1/2 Gasket Assy	2
9	FE-024-57	Connector Straight (Non-Metallic) Sealtite (1/2 Male Thd. x 1/2 Flex. Cnd.)	AR
10	FE-024-65	Connector 90 Deg. (Non-Metallic) Sealtite (1/2 Male Thd. x 1/2 Flex. Cnd.)	AR
11	FE-024-62	Connector - Conduit 3/4 (Non-Metallic) Sealtite	2
12	FE-024-58	Connector Straight (Non-Metallic) Sealtite (3/4 Male Thd. x 3/4 Flex. Cnd.)	2
13	FE-024-57	Connector Straight (Non-Metallic) Sealtite (1/2 Male Thd. x 1/2 Flex. Cnd.)	1
14	FE-024-61	Connector 45 Deg. (Non-Metallic) Sealtite (1/2 Male Thd. x 1/2 Flex. Cnd.)	1
15	FE-024-61	Connector 45 Deg. (Non-Metallic) Sealtite (1/2 Male Thd. x 1/2 Flex. Cnd.)	4
16	FE-024-57	Connector Straight (Non-Metallic) Sealtite (1/2 Male Thd. x 1/2 Flex. Cnd.)	2
17	FE-024-61	Connector 45 Deg. (Non-Metallic) Sealtite (1/2 Male Thd. x 1/2 Flex. Cnd.)	2
18	FE-024-57	Connector Straight (Non-Metallic) Sealtite (1/2 Male Thd. x 1/2 Flex. Cnd.)	2
19	FE-024-61	Connector 45 Deg. (Non-Metallic) Sealtite (1/2 Male Thd. x 1/2 Flex. Cnd.)	2
20	00-328437	Cover - Wireway	2
21	WS-003-49	Washer 0.266 x 0.563 x 0.062 (SST)	2
22	WL-006-17	Lockwasher 1/4 Helical (SST)	2
23	NS-015-01	Nut 1/4-20 Hex (SST)	2
24	FE-024-57	Connector Straight (Non-Metallic) Sealtite (1/2 Male Thd. x 1/2 Flex. Cnd.)	1
25	FE-024-65	Connector 90 Deg. (Non-Metallic) Sealtite (1/2 Male Thd. x 1/2 Flex. Cnd.)	1
26	PB-004-08	Plug Button Heyco #2703	AR
27	WL-014-10	Lockwasher 1/4 External Shakeproof	1
28	NS-031-21	Stop Nut 1/4-20 Hex (SST)	1
29	00-328452-00001	Cover - Wireway Channel (LH)	1
30	00-328452-00002	Cover - Wireway Channel (RH)	1
31	SC-053-05	Mach. Screw 10-24 x 3/8 Slotted Truss Hd. (SST)	4
32	00-328464	Channel - Wireway (LH)	1
33	FE-024-75	Bushing - Electrical Snap (1)	2
34	FE-024-57	Connector Straight (Non-Metallic) Sealtite (1/2 Male Thd. x 1/2 Flex. Cnd.)	2
35	FE-024-61	Connector 45 Deg. (Non-Metallic) Sealtite (1/2 Male Thd. x 1/2 Flex. Cnd.)	2
36	00-436853	Ignitor Board (24 VAC)	2
37	NS-031-50	Stop Nut 6-32 Hex (SST)	8
38	00-271146-00002	Cable - High Voltage	2
39	00-328459	Cover - Ignitor Board	2
40	SC-053-05	Mach. Screw 10-24 x 3/8 Slotted Truss Hd. (SST)	2
41	00-294325-014-1	Block - Terminal	4
42	SC-021-15	Mach. Screw 8-32 x 1/2 Rd. Hd., Slotted	8
43	00-328462-00001	Bracket - Ignitor Board (LH)	1
44	00-328462-00002	Bracket - Ignitor Board (RH)	1
45	SC-041-11	Cap Screw 5/16-18 x 3/4 Hex Hd. (SST)	4
46	WL-006-23	Lockwasher 5/16 Helical (SST)	4
47	WS-017-01	Washer 0.328 x 0.875 x 0.062 (SST)	2
48	WL-006-23	Lockwasher 5/16 Helical (SST)	2
49	NS-015-11	Nut 5/16-18 Hex (SST)	2
50	00-328455-00001	Flue (LH)	1
51	00-328455-00002	Flue (RH)	1
52	WS-003-49	Washer 0.266 x 0.563 x 0.062 (SST)	10
53	WL-006-17	Lockwasher 1/4 Helical (SST)	10
54	NS-015-01	Nut 1/4-20 Hex (SST)	10
55	WS-003-49	Washer 0.266 x 0.563 x 0.062 (SST)	4

GAS HEAT BURNERS, FLUES, AND WIREWAYS

ILLUS. PL-55291	PART NO.	NAME OF PART	AMT.
56	WL-006-17	Lockwasher 1/4 Helical (SST)	4
57	NS-015-01	Nut 1/4-20 Hex (SST)	4
58	SC-066-06	Mach. Screw 10-24 x 1/2 Phil. Truss Hd. (SST)	10
59	00-328415	Liner - Shroud	2
60	00-328416	Insulation	2
61	00-328453-00001	Shroud (LH)	1
62	00-328453-00002	Shroud (RH)	1
63	00-328454-00001	Shroud Assy. (LH) (Incls. Items 58, 59, 60, & 61)	1
64	00-328454-00002	Shroud Assy. (RH) (Incls. Items 58, 59, 60, & 62)	1
65	00-435952	Flange - Immersion Tube	2
66	00-436100	Gasket	4
67	SC-121-43	Cap Screw 7/16-14 x 1-3/4 Hex Hd. (SST)	16
68	WS-021-07	Washer (SST)	32
69	WL-019-77	Lockwasher 7/16 Medium (SST)	16
70	NS-047-97	Nut 7/16-14 Hex	16
71	00-328460-00001	Tube - Immersion (LH)	1
72	00-328460-00002	Tube - Immersion (RH)	1

NOTES

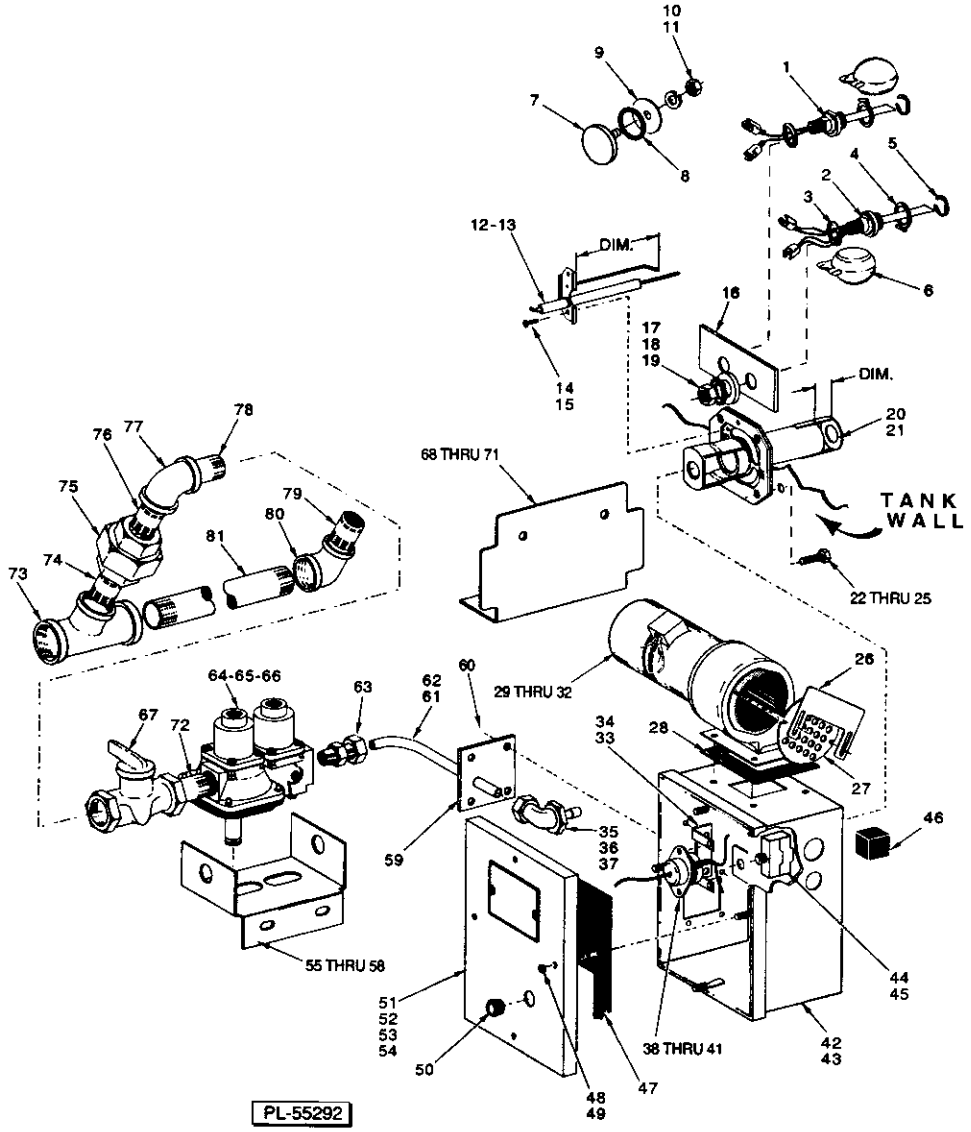

GAS HEAT COMPONENTS

GAS HEAT COMPONENTS

ILLUS. PL-55292	PART NO.	NAME OF PART	AMT.
1	00-328495	Probe & Switch Assy. (2 Wire) (Water Level) (Must Order 2 Jumper Wires Part #328758)	AR
2	00-271621	Switch & Probe Assy. (4-Wire) (Long)	2
3	00-067500-00072	O-Ring	AR
4	00-112467	Retainer - Float	AR
5	RR-010-13	Retaining Ring	AR
6	00-122674	Float Assy	AR
*7	00-119244-00002	Cap & Stud Assembly	AR
*8	00-067500-00031	O-Ring	AR
*9	WS-003-47	Washer (SST)	AR
*10	WL-006-17	Lockwasher 1/4 Helical (SST)	AR
*11	NS-015-01	Nut 1/4-20 Hex (SST)	AR
12	00-436792	Electrode Ignition - Natural Gas (Dim. 31/8) (Marked #665)	2
13	00-436067	Electrode Ignition - L.P. Gas (Dim. 33/8) (Marked #662)	2
14	SC-093-03	Mach. Screw 8-32 x 3/8 Slotted Pan Hd. (SST)	4
15	WL-014-05	Lockwasher #8 External Shakeproof (SST)	4
16	00-435960-00001	Plate Spacer	2
17	NS-018-28	Jam Nut 1/2-20 Hex (SST)	AR
18	WL-014-31	Lockwasher 1/2 External Shakeproof (SST)	AR
19	WS-010-40	Washer - Thrust	AR
20	00-328649	Bracket - Orifice (Nat. Gas) (Shown) (Dim. 1/2) (Marked NAT)	2
21	00-436761	Bracket - Orifice (L.P. Gas) (Dim. 1/2) (Marked LP)	2
22	SC-121-43	Cap Screw 7/16-14 x 1-3/4 Hex Hd. (SST)	16
23	WS-021-07	Washer (SST)	32
24	WL-019-77	Lockwasher 7/16 Medium (SST)	16
25	NS-047-97	Nut 7/16-14 Hex	16
26	00-328428	Plate - Adjusting	2
27	00-328427	Plate - Restrictor	2
28	00-328473	Gasket - Blower	2
29	00-328476-00001	Blower - Motor	2
30	SC-041-05	Cap Screw 1/4-20 x 5/8 Hex Hd	8
31	WL-014-10	Lockwasher 1/4 External Shakeproof	2
32	NS-031-21	Stop Nut 1/4-20 Hex (SST)	8
33	00-271122-00002	Bracket - Thermostat	2
34	SC-053-05	Mach. Screw 10-24 x 3/8 Slotted Truss Hd. (SST)	8
35	00-435701-00003	Angle Fitting (Nat. Gas, 60 Hz.) #25 Drill (0.1495)	2
36	00-435701-00004	Angle Fitting (Nat. Gas, 50 Hz.) #29 Drill (0.136)	2
37	00-435701-00002	Angle Fitting (L.P. Gas, 50/60 Hz.) #43 Drill (0.089)	2
38	00-271123	Protector - High Limit	2
39	00-293946	Sleeve - Lead	2
40	SC-127-26	Mach. Screw 6-32 x 3/8 Phil. Rd. Hd. (SST)	4
41	NS-031-50	Stop Nut 6-32 Hex (SST)	4
42	00-328465	Box - Gas Heat (LH)	1
43	00-328466	Box - Gas Heat (RH)	1
44	00-087711-153-1	Switch - Limit	2
45	00-328508	Insulator - Switch	2
46	00-328450	Plug - Rubber (Conduit)	8
47	00-328429	Gasket - Lid	2
48	WS-019-06	Washer (SST)	8
49	NS-031-16	Stop Nut 10-24 Elastic (SST)	8
50	00-435024	Eye	2
51	00-328467-00001	Lid - Gas Heat Box (Nat. Gas, 60 Hz.)	2
52	00-328467-00002	Lid - Gas Heat Box (Nat. Gas, 50 Hz.)	2
53	00-328467-00003	Lid - Gas Heat Box (L.P. Gas, 60 Hz.)	2
54	00-328467-00004	Lid - Gas Heat Box (L.P. Gas, 50 Hz.)	2
55	00-328212	Bracket - Valve	2

GAS HEAT COMPONENTS

ILLUS. PL-55292	PART NO.	NAME OF PART	AMT.
56	SC-041-10	Cap Screw 5/16-18 x 5/8 Hex Hd. (SST)	4
57	WL-006-23	Lockwasher 5/16 Helical (SST)	4
58	NS-015-11	Nut 5/16-18 Hex (SST)	4
59	00-328440	Plate - Gas Line	2
60	SC-053-05	Mach. Screw 10-24 x 3/8 Slotted Truss Hd. (SST)	8
61	00-328425-00002	Tube - Gas (LH Tank)	1
62	00-328425	Tube - Gas (RH Tank)	1
63	00-435702	Connector - Special	2
64	00-328426-00001	Gas Valve (Nat. Gas)	2
65	00-328426-00002	Gas Valve (L.P. Gas, 60 Hz.)	2
66	00-328426-00003	Gas Valve (L.P. Gas, 50 Hz.)	2
67	00-291988-00003	Valve - Gas (Shut Off)	2
68	00-328421	Deflector - Flue	2
69	WS-003-49	Washer 0.266 x 0.563 x 0.062 (SST)	4
70	WL-006-17	Lockwasher 1/4 Helical (SST)	4
71	NS-015-01	Nut 1/4-20 Hex (SST)	4
72	FP-035-94	Pipe 1/2 x 11/2 Lg. TBE	2
73	FP-019-33	Tee 3/4 x 3/4 x 1/2 Reducing	1
74	FP-059-61	Pipe 1/2 x 11/4 Lg. TBE	1
75	FP-022-11	Union - Pipe	2
76	FP-059-61	Pipe 1/2 x 11/4 Lg. TBE	2
77	FP-013-15	Elbow - Pipe 1/2 x 90 Deg	2
78	FP-059-61	Pipe 1/2 x 11/4 Lg. TBE	2
79	FP-059-61	Pipe 1/2 x 11/4 Lg. TBE	1
80	FP-078-89	Elbow 3/4 NPT x 1/2 Reducing	1
81	FP-087-27	Pipe 3/4 x 61 TBE	1
	00-294357-00001	Connector	2
	00-294357-00002	Connector (Black)	2
	00-435538	Wire Harness - Ignitor Board	2
	00-328758	Jumper Wire - Socket Type Connector (Use With Item 39)	2

* Use one set on FRC86A or FRC100A machines in place of item 1 in wash tank and one set in rinse tank on all units.

NOTES

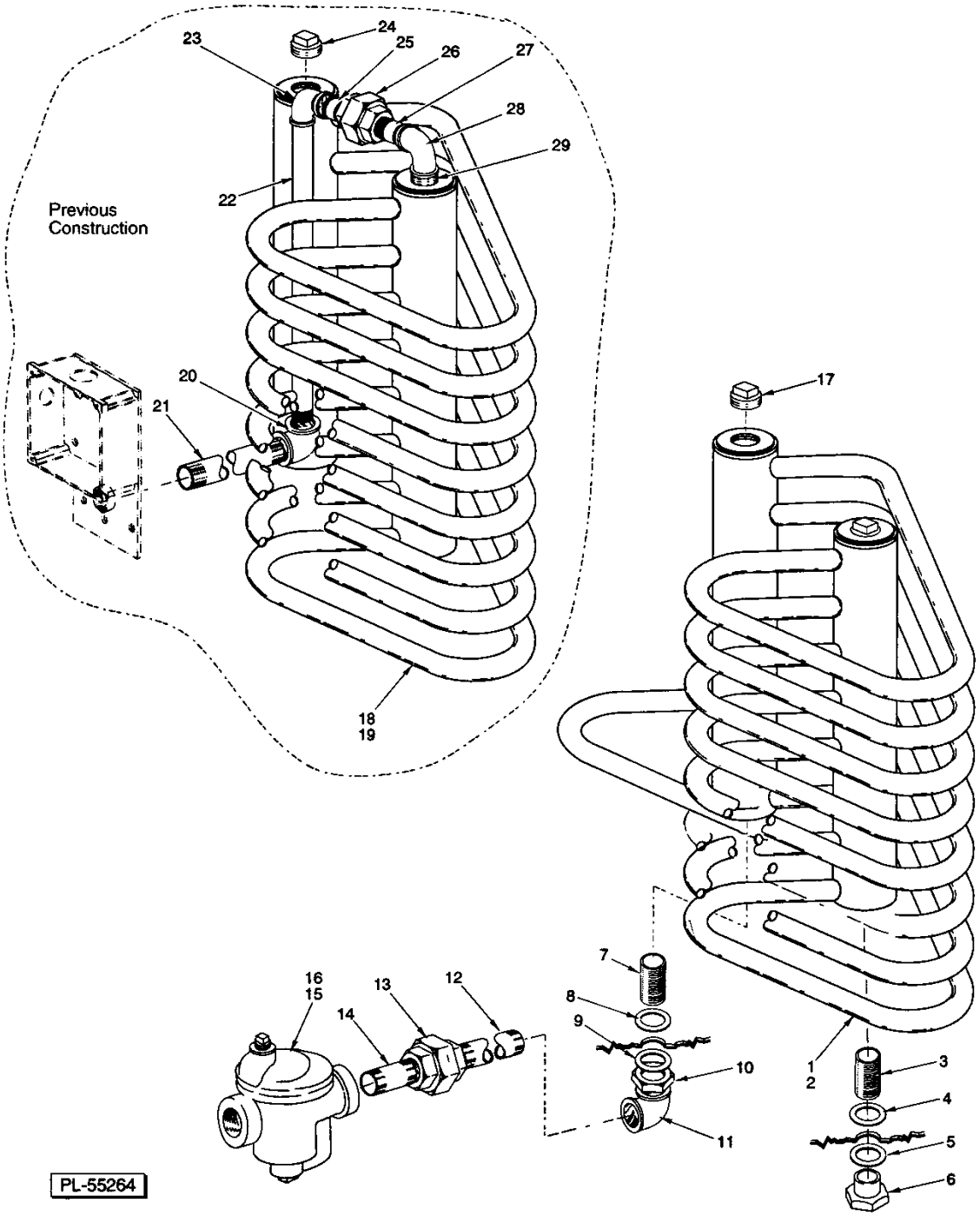

STEAM COILS
(2 UNITS REQUIRED)

STEAM COILS
(2 UNITS REQUIRED)

ILLUS. PL-55264	PART NO.	NAME OF PART	AMT.
1	00-328823-00001	Coil - Steam (LH Tank) (Shown)	1
2	00-328823-00002	Coil - Steam (RH Tank)	1
3	FP-080-17	Pipe 3/4 x 2 (TBE; 11/2 R.T.O.E.) (SST)	1
4	WS-013-45	Washer (SST)	1
5	WS-013-45	Washer (SST)	1
6	FP-053-09	Lock Nut 3/4 NPSL Pipe (SST)	1
7	FP-080-17	Pipe 3/4 x 2 (TBE; 11/2 R.T.O.E.) (SST)	1
8	WS-013-45	Washer (SST)	1
9	WS-013-45	Washer (SST)	1
10	FP-053-09	Lock Nut 3/4 NPSL Pipe (SST)	1
11	FP-013-22	Elbow Pipe 3/4 x 90 Deg	1
12	FP-059-64	Pipe 3/4 x 5-1/2 TBE	1
13	FP-022-17	Union 3/4 (Grd. Seat)	1
14	FP-036-92	Pipe 3/4 x 1-3/8 TBE (Black)	1
15	00-118316	Steam Trap (0-20 PSI)	1
16	00-118317	Steam Trap (21-50 PSI)	1
17	FP-052-09	Pipe Plug 3/4 Sq. Hd. (SST)	1
18	00-437158-00001	NLA - Obsolete--Coil - Steam (LH Tank) (Shown)	1
19	00-437158-00002	Coil - Steam (RH Tank)	1
20	FP-049-15	Elbow 3/4 x 90 Deg. (SST)	1
21	FP-054-44	Pipe 3/4 x 2-1/2 TBE (SST)	1
22	FP-087-11	Pipe 3/4 x 9 1/2 TBE (SST)	1
23	FP-049-15	Elbow 3/4 x 90 Deg. (SST)	1
24	FP-052-09	Pipe Plug 3/4 Sq. Hd. (SST)	1
25	FP-054-27	Pipe 3/4 x 1-3/8 TBE (SST)	1
26	FP-050-14	Union 3/4 (Grd. Seat) (SST)	1
27	FP-054-27	Pipe 3/4 x 1-3/8 TBE (SST)	1
28	FP-049-15	Elbow 3/4 x 90 Deg. (SST)	1
29	FP-054-27	Pipe 3/4 x 1-3/8 TBE (SST)	1

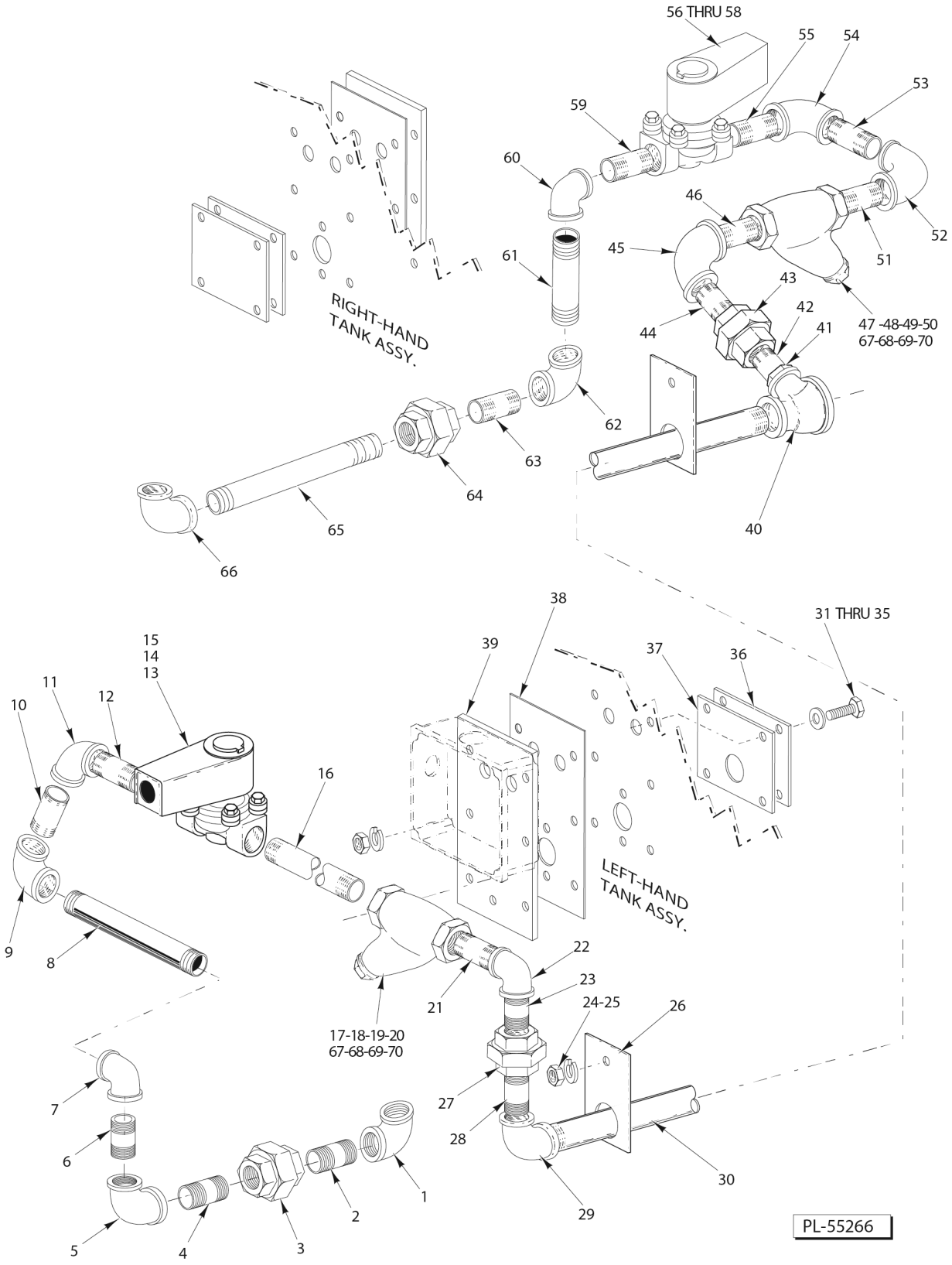

STEAM COIL PIPING

STEAM COIL PIPING

ILLUS. PL-55266	PART NO.	NAME OF PART	AMT.
1	FP-013-22	Elbow Pipe 3/4 x 90 Deg.	1
2	FP-036-12	Pipe 3/4 x 7-3/4 TBE	1
3	FP-022-17	Union 3/4 (Grd. Seat)	1
4	FP-036-05	Pipe 3/4 x 3 TBE	1
5	FP-013-22	Elbow Pipe 3/4 x 90 Deg.	1
6	FP-036-03	Pipe 3/4 x 2-3/4 TBE	1
7	FP-013-22	Elbow Pipe 3/4 x 90 Deg.	1
8	FP-080-81	Pipe 3/4 x 8 1/4 TBE	1
9	FP-013-22	Elbow Pipe 3/4 x 90 Deg.	1
10	FP-036-05	Pipe 3/4 x 3 TBE	1
11	FP-013-22	Elbow Pipe 3/4 x 90 Deg.	1
12	FP-036-92	Pipe 3/4 x 1-3/8 TBE (Black)	1
13	00-270329-00001	Solenoid Valve (120 V.) (Incls. Items 14 & 15)	1
14	00-270318-00001	Coil - Solenoid Valve (120 V.)	1
15	00-270336	Service Kit - Solenoid Valve	1
16	FP-059-64	Pipe 3/4 x 5-1/2 TBE	1
*17	00-186922	Strainer - Line (3/4 In.) (Brass) (Kitz) (Incls. Items 18, 19, & 20) (Alternate to Item 67)	1
18	00-186923	Plug - Branch	1
19	00-186924	Gasket - Branch Plug	1
20	00-186925	Screen - Line Strainer	1
21	FP-036-92	Pipe 3/4 x 1-3/8 TBE (Black)	1
22	FP-013-22	Elbow Pipe 3/4 x 90 Deg.	1
23	FP-036-05	Pipe 3/4 x 3 TBE	1
24	WL-006-17	Lockwasher 1/4 Helical (SST)	2
25	NS-015-01	Nut 1/4-20 Hex (SST)	2
26	00-289783	Bracket - Pipe Support	2
27	FP-022-17	Union 3/4 (Grd. Seat)	1
28	FP-036-95	Pipe 3/4 x 2 TBE	1
29	FP-079-97	Elbow - Reducing 90 Deg. 1 to 3/4	1
30	FP-075-90	Pipe 1 x 391/2 TBE	1
31	SC-041-15	Cap Screw 5/16-18 x 11/4 Hex Hd	14
32	WS-017-08	Washer (0.328 x 0.625 x 0.062) (SST)	28
33	WL-006-23	Lockwasher 5/16 Helical (SST)	14
34	NS-015-11	Nut 5/16-18 Hex (SST)	14
35	00-545595	Sealer (1/8 Rd.)	AR
36	00-328777	Plate - Inner	2
37	00-435026	Gasket	2
38	00-271109	Gasket - Mounting	2
39	00-328776	Plate - Outer	2
40	FP-019-76	Tee - Pipe 1 1/2 x 1 x 1	1
41	FP-026-26	Bushing 1 to 3/4	1
42	FP-036-92	Pipe 3/4 x 1-3/8 TBE (Black)	1
43	FP-022-17	Union 3/4 (Grd. Seat)	1
44	FP-036-92	Pipe 3/4 x 1-3/8 TBE (Black)	1
45	FP-013-22	Elbow Pipe 3/4 x 90 Deg.	1
46	FP-036-92	Pipe 3/4 x 1-3/8 TBE (Black)	1
*47	00-186922	Strainer - Line (3/4 In.) (Brass) (Kitz) (Incls. Items 48, 49, & 50) (Alternate to Item 67)	1
48	00-186923	Plug - Branch	1
49	00-186924	Gasket - Branch Plug	1
50	00-186925	Screen - Line Strainer	1
51	FP-036-92	Pipe 3/4 x 1-3/8 TBE (Black)	1
52	FP-013-22	Elbow Pipe 3/4 x 90 Deg.	1
53	FP-036-92	Pipe 3/4 x 1-3/8 TBE (Black)	1
54	FP-013-22	Elbow Pipe 3/4 x 90 Deg.	1
55	FP-036-92	Pipe 3/4 x 1-3/8 TBE (Black)	1

STEAM COIL PIPING

ILLUS. PL-55266	PART NO.	NAME OF PART	AMT.
56	00-270329-00001	Solenoid Valve (120 V.) (Incls. Items 57 & 58)	1
57	00-270318-00001	Coil - Solenoid Valve (120 V.)	1
58	00-270336	Service Kit - Solenoid Valve	1
59	FP-036-92	Pipe 3/4 x 1-3/8 TBE (Black)	1
60	FP-013-22	Elbow Pipe 3/4 x 90 Deg	1
61	FP-078-38	Pipe 3/4 x 3 3/4 TBE	1
62	FP-013-22	Elbow Pipe 3/4 x 90 Deg	1
63	FP-036-05	Pipe 3/4 x 3 TBE	1
64	FP-022-17	Union 3/4 (Grd. Seat)	1
65	FP-036-12	Pipe 3/4 x 7-3/4 TBE	1
66	FP-013-22	Elbow Pipe 3/4 x 90 Deg	1
*67	00-186922	Strainer - Line (3/4 In.) (Brass) (Apollo / Conbraco) (Incls. Items 68, 69, & 70) (Alternate to Items 17 & 47)	1
68	00-749802-00001	Cap	1
69	00-749802-00002	Gasket	1
70	00-749802-00003	Screen (80 Mesh)	1

* Kitz line strainer is approx. 1/4" shorter than Apollo / Conbraco.

NOTES

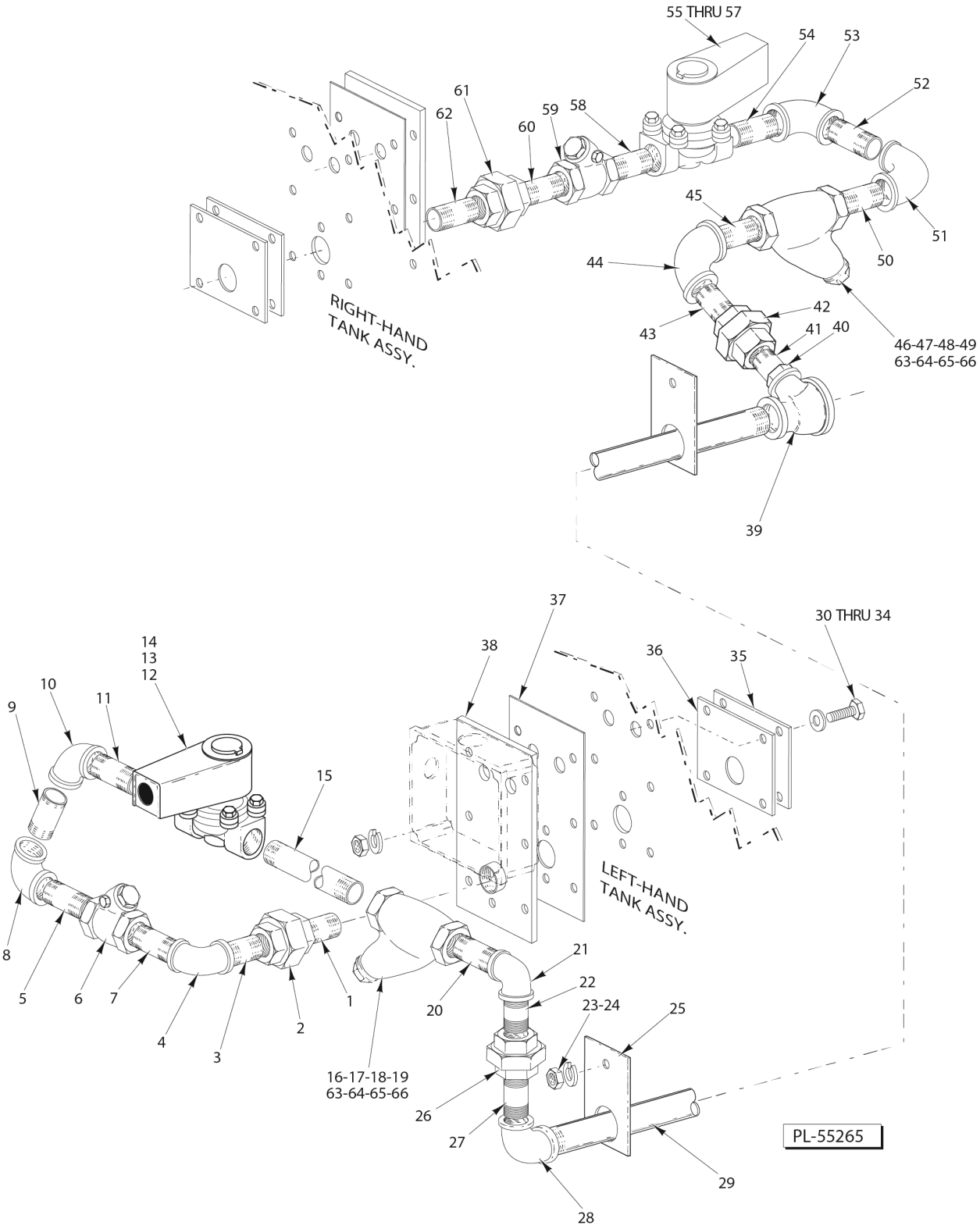

STEAM INJECTOR AND PREVIOUS CONSTRUCTION STEAM COIL PIPING

STEAM INJECTOR AND PREVIOUS CONSTRUCTION STEAM COIL PIPING

ILLUS. PL-55265	PART NO.	NAME OF PART	AMT.
1	FP-036-92	Pipe 3/4 x 1-3/8 TBE (Black)	1
2	FP-022-17	Union 3/4 (Grd. Seat)	1
3	FP-036-92	Pipe 3/4 x 1-3/8 TBE (Black)	1
4	FP-013-22	Elbow Pipe 3/4 x 90 Deg	1
5	FP-036-92	Pipe 3/4 x 1-3/8 TBE (Black)	1
6	00-074696	Check Valve (3/4)	1
7	FP-036-95	Pipe 3/4 x 2 TBE	1
8	FP-013-22	Elbow Pipe 3/4 x 90 Deg	1
9	FP-036-92	Pipe 3/4 x 1-3/8 TBE (Black)	1
10	FP-013-22	Elbow Pipe 3/4 x 90 Deg	1
11	FP-036-92	Pipe 3/4 x 1-3/8 TBE (Black)	1
12	00-270329-00001	Solenoid Valve (120 V.) (Incls. Items 13 & 14)	1
13	00-270318-00001	Coil - Solenoid Valve (120 V.)	1
14	00-270336	Service Kit - Solenoid Valve	1
15	FP-059-64	Pipe 3/4 x 5-1/2 TBE	1
*16	00-186922	Strainer - Line (3/4 In.) (Brass) (Kitz) (Incls. Items 17, 18, & 19) (Alternate to Item 63)	1
17	00-186923	Plug - Branch	1
18	00-186924	Gasket - Branch Plug	1
19	00-186925	Screen - Line Strainer	1
20	FP-036-92	Pipe 3/4 x 1-3/8 TBE (Black)	1
21	FP-013-22	Elbow Pipe 3/4 x 90 Deg	1
22	FP-036-92	Pipe 3/4 x 1-3/8 TBE (Black)	1
23	WL-006-17	Lockwasher 1/4 Helical (SST)	2
24	NS-015-01	Nut 1/4-20 Hex (SST)	2
25	00-289783	Bracket - Pipe Support	2
26	FP-022-17	Union 3/4 (Grd. Seat)	1
27	FP-036-95	Pipe 3/4 x 2 TBE	1
28	FP-079-97	Elbow - Reducing 90 Deg. 1 to 3/4	1
29	FP-075-90	Pipe 1 x 391/2 TBE	1
30	SC-041-15	Cap Screw 5/16-18 x 11/4 Hex Hd	14
31	WS-017-08	Washer (0.328 x 0.625 x 0.062) (SST)	28
32	WL-006-23	Lockwasher 5/16 Helical (SST)	14
33	NS-015-11	Nut 5/16-18 Hex (SST)	14
34	00-545595	Sealer	AR
35	00-435027	Plate	2
36	00-435026	Gasket	2
37	00-271109	Gasket - Mounting	2
38	00-271108	Plate - Mounting	2
39	FP-019-76	Tee - Pipe 1 1/2 x 1 x 1	1
40	FP-026-26	Bushing 1 to 3/4	1
41	FP-036-92	Pipe 3/4 x 1-3/8 TBE (Black)	1
42	FP-022-17	Union 3/4 (Grd. Seat)	1
43	FP-036-92	Pipe 3/4 x 1-3/8 TBE (Black)	1
44	FP-013-22	Elbow Pipe 3/4 x 90 Deg	1
45	FP-036-92	Pipe 3/4 x 1-3/8 TBE (Black)	1
*46	00-186922	Strainer - Line (3/4 In.) (Brass) (Kitz) (Incls. Items 47, 48, & 49) (Alternate to Item 63)	1
47	00-186923	Plug - Branch	1
48	00-186924	Gasket - Branch Plug	1
49	00-186925	Screen - Line Strainer	1
50	FP-036-92	Pipe 3/4 x 1-3/8 TBE (Black)	1
51	FP-013-22	Elbow Pipe 3/4 x 90 Deg	1
52	FP-036-92	Pipe 3/4 x 1-3/8 TBE (Black)	1
53	FP-013-22	Elbow Pipe 3/4 x 90 Deg	1
54	FP-036-92	Pipe 3/4 x 1-3/8 TBE (Black)	1
55	00-270329-00001	Solenoid Valve (120 V.) (Incls. Items 56 & 57)	1

STEAM INJECTOR AND PREVIOUS CONSTRUCTION STEAM COIL PIPING

ILLUS. PL-55265	PART NO.	NAME OF PART	AMT.
56	00-270318-00001	Coil - Solenoid Valve (120 V.)	1
57	00-270336	Service Kit - Solenoid Valve	1
58	FP-036-92	Pipe 3/4 x 1-3/8 TBE (Black)	1
59	00-074696	Check Valve (3/4)	1
60	FP-036-92	Pipe 3/4 x 1-3/8 TBE (Black)	1
61	FP-022-17	Union 3/4 (Grd. Seat)	1
62	FP-036-92	Pipe 3/4 x 1-3/8 TBE (Black)	1
*63	00-186922	Strainer - Line (3/4 In.) (Brass) (Apollo / Conbraco) (Incls. Items 64, 65, & 66) (Alternate to Items 17 & 46)	1
64	00-749802-00001	Cap	1
65	00-749802-00002	Gasket	1
66	00-749802-00003	Screen (80 Mesh)	1

* Kitz line strainer is approx. 1/4" shorter than Apollo / Conbraco.

NOTES

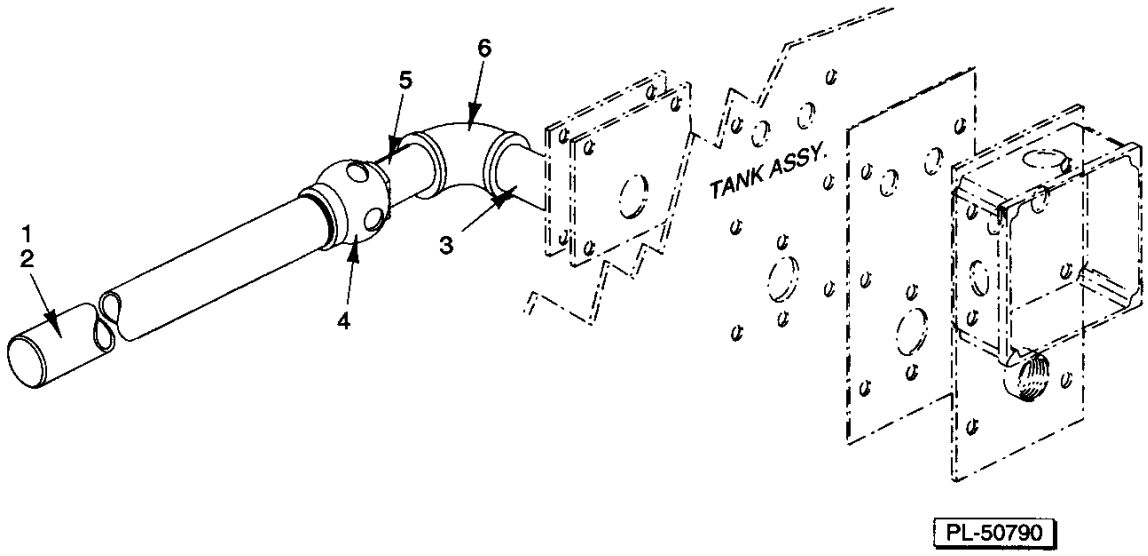

STEAM INJECTOR HEAT
(2 UNITS REQUIRED)

STEAM INJECTOR HEAT
(2 UNITS REQUIRED)

ILLUS. PL-50790	PART NO.	NAME OF PART	AMT.
1	00-271110	Piping - Steam Injector (Incls. Items 2, 4, & 5)	1
2	FP-085-05	Pipe 1 x 10-1/2 STOE (SST)	1
3	FP-080-22	Pipe 3/4 x 61/4 Lg. (TBE) (SST)	1
4	00-288671	Silent Water Heater Assy	1
5	FP-054-44	Pipe 3/4 x 21/2 (TBE) (SST)	1
6	FP-049-15	Elbow 3/4 x 90 Deg. (SST)	1
	00-546292	Sealer - Pipe	AR
	00-545595	Sealer (1/8 Rd.)	AR