HOBART

CATALOG OF

REPLACEMENT PARTS

FLASHBAKE MICROWAVE

HFBMW2/3 ML-126818



A product of HOBART CORPORATION 701 S. RIDGE AVENUE TROY, OHIO 45374-0001

FORM 34658 (June 2001)

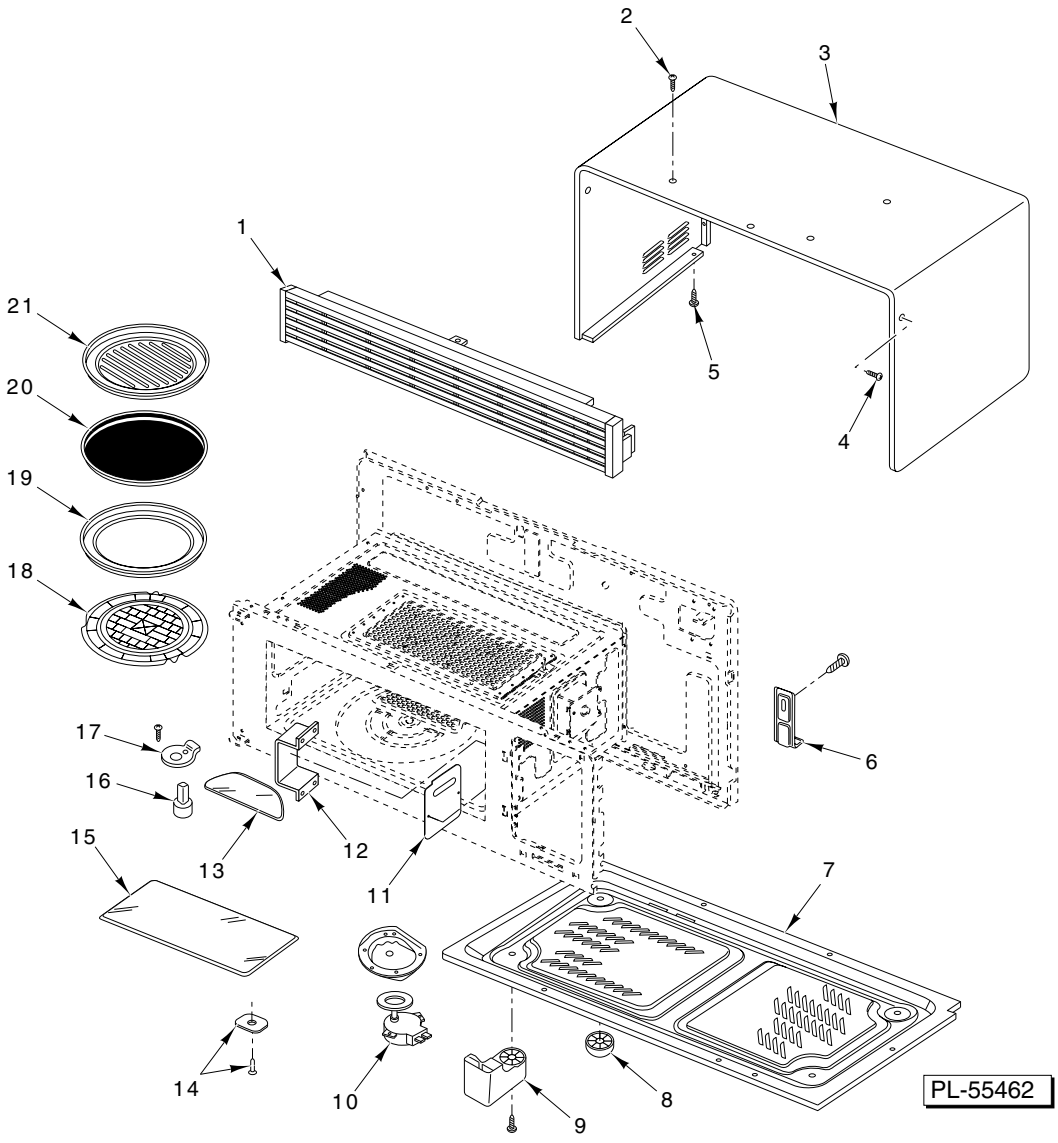

OVEN CAVITY PARTS

OVEN CAVITY PARTS

ILLUS. PL-55462	PART NO.	NAME OF PART	AMT.
1	00-854065-00011	Grille Assy.	1
2	SD-038-64	Self-Tapping Screw M4 x 12 mm Phil. Pan Washer Hd., Type BT	AR
3	00-854065-00007	Outer Cover	1
4	SD-038-64	Self-Tapping Screw M4 x 12 mm Phil. Pan Washer Hd., Type BT	AR
5	SD-038-63	Mach. Screw M4 x 8 mm Phil. Pan Washer Hd., Type BT	AR
6	00-854065-00001	Bracket – Anti-Tip	1
7	00-854065-00012	Base Plate	1
8	00-854065-00060	Leg – Rear	2
9	00-854065-00059	Leg – Front	2
10	00-854065-00030	Motor – Turntable	1
11	00-854065-00038	Cover – Wave Guide (MICA)	1
12	00-854065-00015	Cover – Inlet	1
13	00-854065-00057	Glass – Bottom	1
14	00-854065-00033	Upper Glass Retainer	2
15	00-854065-00056	Glass – Top	1
16	00-854065-00031	Shaft – Turntable	1
17	00-854065-00032	Lower Glass Retainer	1
18	00-854065-00029	Turntable	1
19	00-854065-00035	Tray – Ceramic	1
20	00-854065-00036	Tray – Metal Pan	1
21	00-854065-00037	Tray – Grille Pan	1
	00-854065-00061	Label – Precaution Door Edge	AR
	00-854065-00062	Label – Wiring Diagram	AR
	00-854065-00063	Label – Caution Microwave	AR
	00-854065-00065	Label – Warning Hot Surface	AR

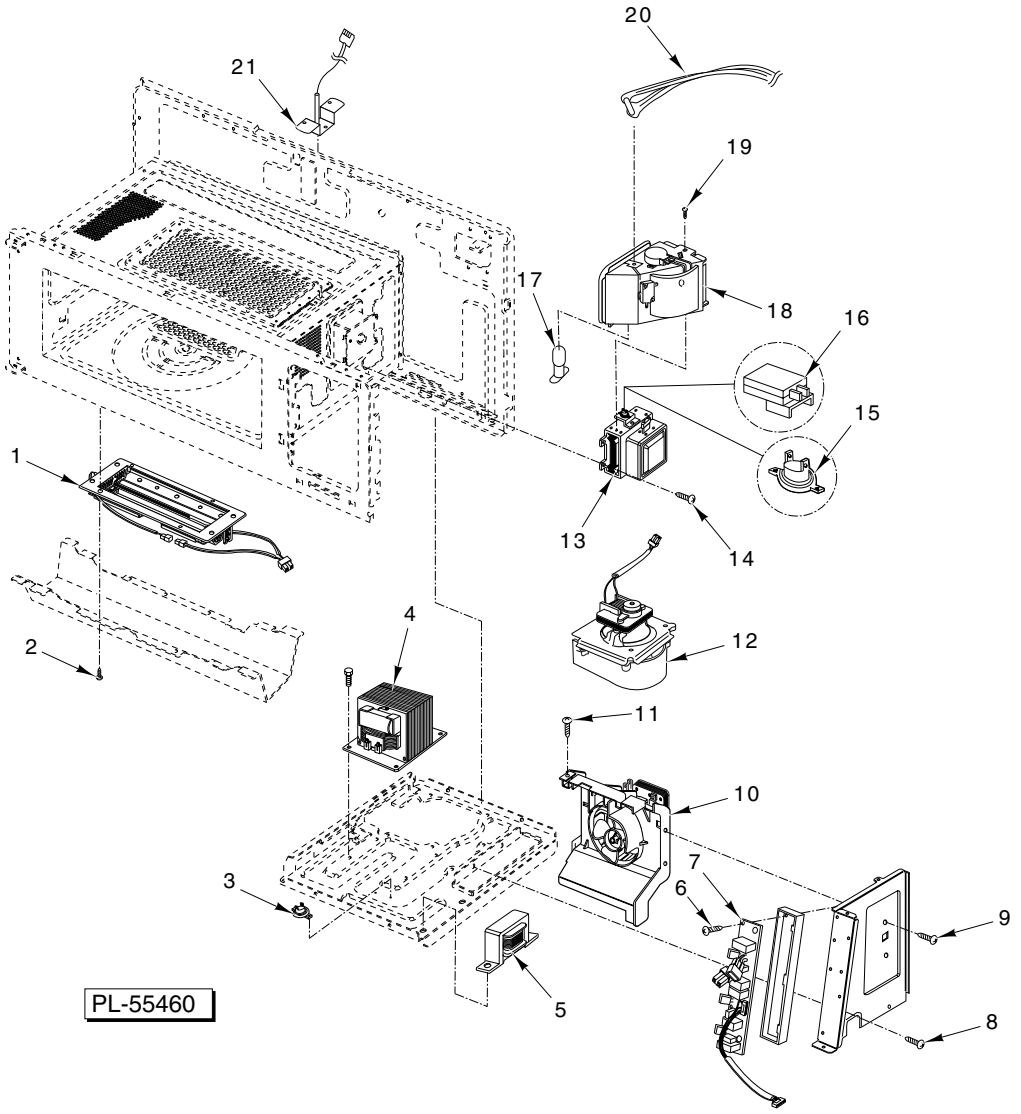

INTERIOR PARTS

INTERIOR PARTS

ILLUS. PL-55460	PART NO.	NAME OF PART	AMT.
1	00-854065-00005	Halogen Lamp Assy. (Bottom)	1
2	SD-038-63	Mach. Screw M4 x 8 mm Phil. Pan Washer Hd., Type BT	AR
3	00-854065-00023	TCO	1
4	00-854065-00021	Transformer – High Voltage	1
5	00-854065-00045	Transformer – Low Voltage	1
6	SD-038-63	Mach. Screw M4 x 8 mm Phil. Pan Washer Hd., Type BT	AR
7	00-854065-00049	Relay PCB	1
8	SD-038-63	Mach. Screw M4 x 8 mm Phil. Pan Washer Hd., Type BT	AR
9	SD-038-64	Self-Tapping Screw M4 x 12 mm Phil. Pan Washer Hd., Type BT	AR
10	00-854065-00018	Fan Assy. (Magnetron)	1
11	SD-038-63	Mach. Screw M4 x 8 mm Phil. Pan Washer Hd., Type BT	AR
12	00-854065-00043	Blower – Lower	1
13	00-854065-00019	Magnetron Assy.	1
14	SD-038-63	Mach. Screw M4 x 8 mm Phil. Pan Washer Hd., Type BT	AR
15	00-854065-00022	TCO (Magnetron) (Self-Resetting)	1
16	00-854065-00058	Choke Filter Assy. (Magnetron) (HFBMW3 Only)	1
17	00-854065-00004	Lamp – Cavity	1
18	00-854065-00028	Damper Door Assy.	1
19	SD-038-63	Mach. Screw M4 x 8 mm Phil. Pan Washer Hd., Type BT	AR
20	00-854065-00048	Thermal Fuse	1
21	00-854065-00017	Thermistor	1

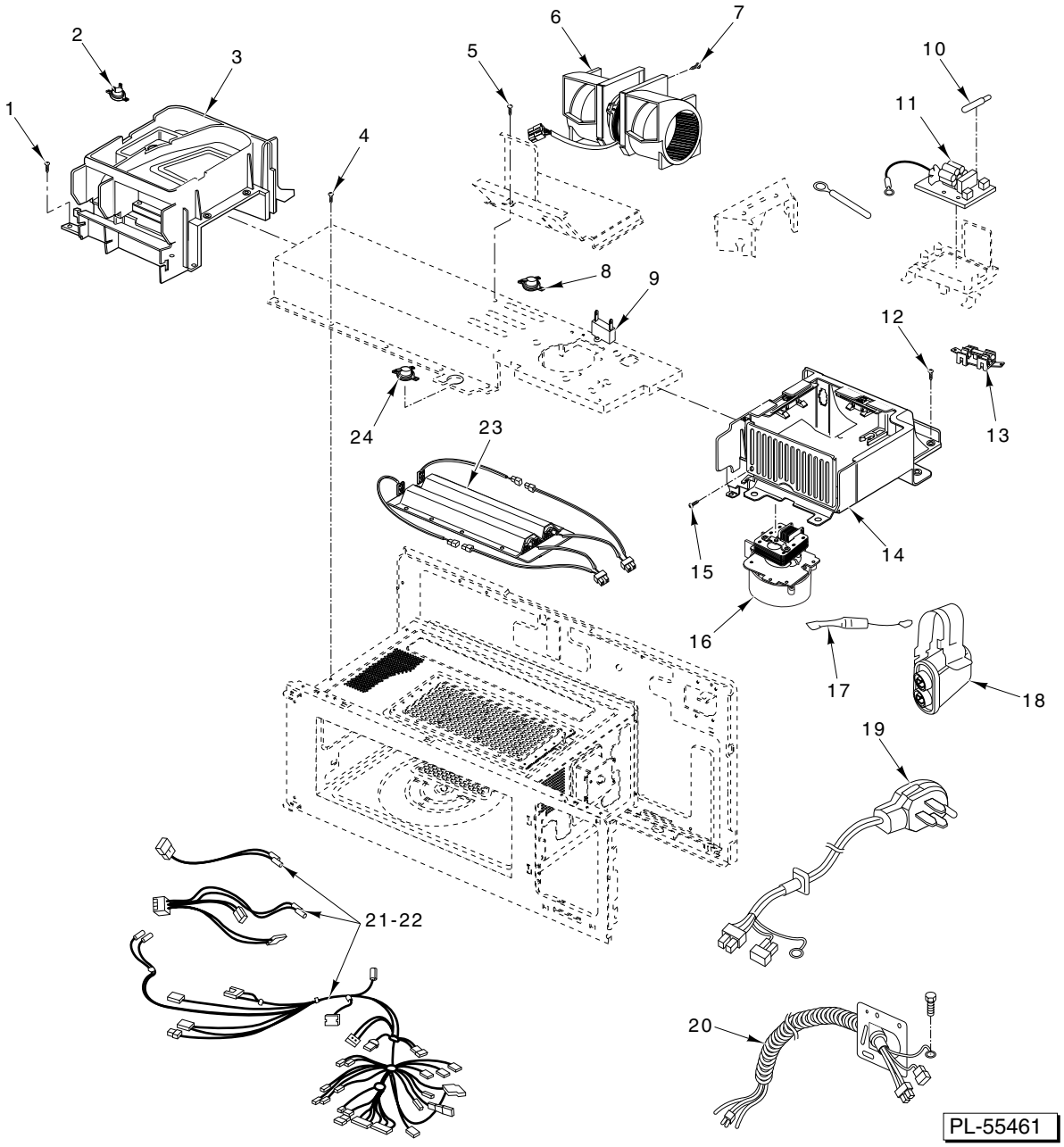

INTERIOR PARTS

INTERIOR PARTS

ILLUS. PL-55461	PART NO.	NAME OF PART	AMT.
1	SD-038-64	Self-Tapping Screw M4 x 12 mm Phil. Pan Washer Hd., Type BT	AR
2	00-854065-00020	TCO (Oven Cavity) (Non-Resetting)	1
3	00-854065-00016	Outlet – Air Tunnel	1
4	SD-038-63	Mach. Screw M4 x 8 mm Phil. Pan Washer Hd., Type BT	AR
5	SD-038-64	Self-Tapping Screw M4 x 12 mm Phil. Pan Washer Hd., Type BT	AR
6	00-854065-00013	Motor – Ventilation	1
7	SD-038-63	Mach. Screw M4 x 8 mm Phil. Pan Washer Hd., Type BT	AR
8	00-854065-00023	TCO	1
9	00-854065-00034	Capacitor – Motor	1
10	00-854065-00044	Fuse	1
11	00-854065-00041	Noise Filter (HFBMW3 Only)	1
12	SD-038-64	Self-Tapping Screw M4 x 12 mm Phil. Pan Washer Hd., Type BT	AR
13	00-854065-00040	Fuse Holder (HFBMW2 Only)	1
14	00-854065-00014	Inlet – Air Tunnel	1
15	SD-038-63	Mach. Screw M4 x 8 mm Phil. Pan Washer Hd., Type BT	AR
16	00-854065-00042	Blower – Upper	1
17	00-854065-00025	Diode	1
18	00-854065-00024	Capacitor – High Voltage	1
19	00-854065-00009	Power Cord Assy. (HFBMW2 Only)	1
20	00-854065-00010	Power Cord Assy. (HFBMW3 Only)	1
21	00-854065-00046	Lead Wire Assy. (HFBMW2 Only)	1
22	00-854065-00047	Lead Wire Assy. (HFBMW3 Only)	1
23	00-854065-00006	Halogen Lamp Assy. (Upper)	1
24	00-854065-00023	TCO	1

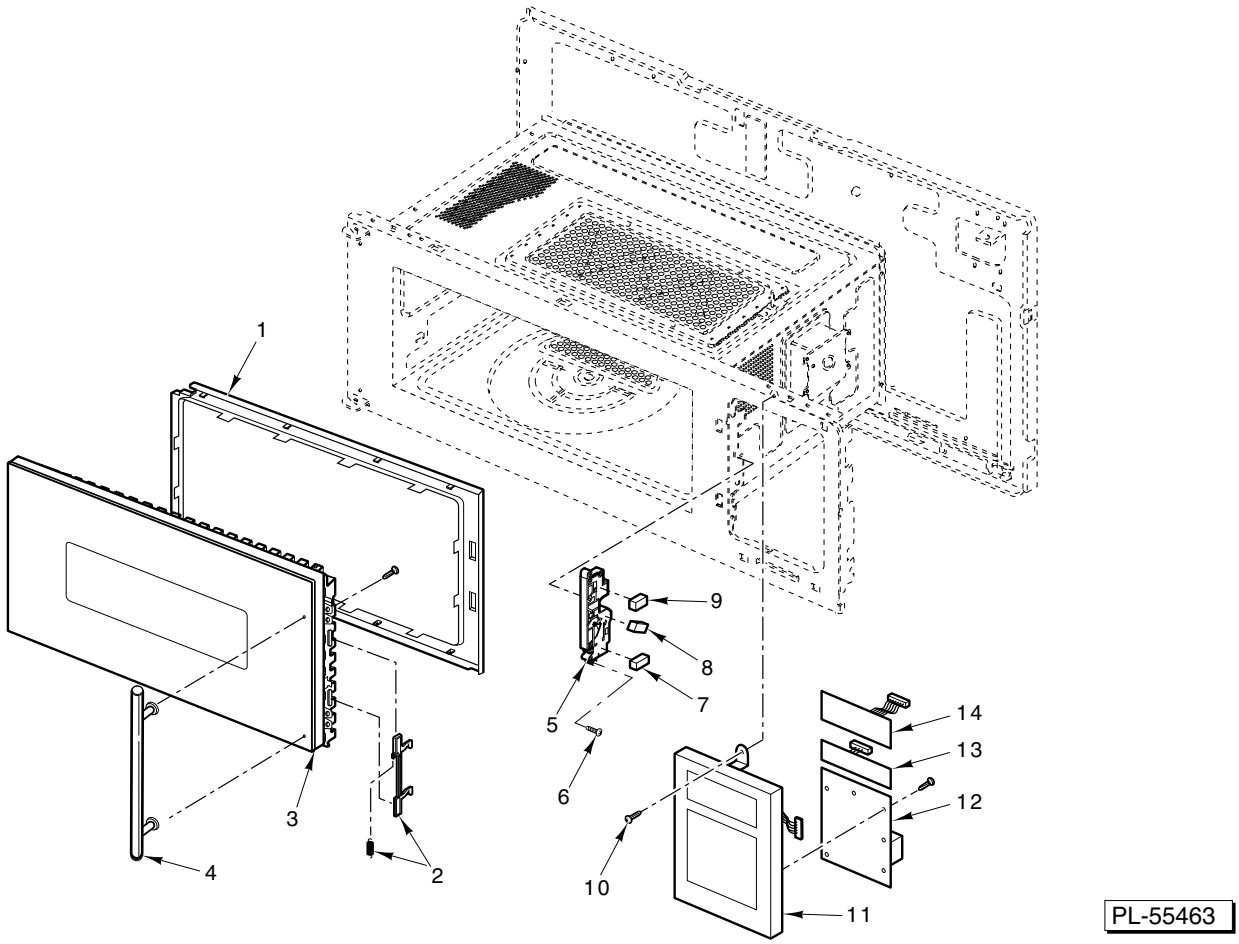

DOOR, CONTROL PANEL, AND DOOR SWITCHES

ILLUS. PL-55463	PART NO.	NAME OF PART	AMT.
1	00-854065-00054	Choke Cover	1
2	00-854065-00055	Latch & Spring Assy.	1
3	00-854065-00052	Door Assy.	1
4	00-854065-00053	Handle Assy.	1
5	00-854065-00008	Bracket – Latch	1
6	SD-038-64	Self-Tapping Screw M4 x 12 mm Phil. Pan Washer Hd., Type BT	AR
7	00-854065-00027	Switch – Secondary Interlock & Door Sensing	1
8	00-854065-00026	Switch – Monitor	1
9	00-854065-00027	Switch – Primary Interlock & Door Sensing	1
10	SD-038-64	Self-Tapping Screw M4 x 12 mm Phil. Pan Washer Hd., Type BT	AR
11	00-854065-00002	Control Panel Assy.	1
12	00-854065-00050	Main PCB Assy.	1
13	00-854065-00039	LED Assy.	1
14	00-854065-00051	Display Assy.	1