CATALOG OF REPLACEMENT PARTS



FRESH SERVE (FS) SCALES

ML-029470	FS-100
ML-029471	FS-10V
ML-029472	FS-1B0
ML-029473	FS-1BV
ML-029474	FS-1E0
ML-029475	FS-1EV
ML-029476	FS-200
ML-029477	FS-20V
ML-029478	FS-2B0
ML-029479	FS-2BV
ML-029480	FS-2E0
ML-029481	FS-2EV
ML-029482	FS-300
ML-029483	FS-30V
ML-029484	FS-3B0
ML-029485	FS-3BV
ML-029486	FS-3E0
ML-029487	FS-3EV

A product of HOBART 701 S. RIDGE AVENUE TROY, OHIO 45374-0001

FORM 43398 Rev. A (September 2024)

 © HOBART 2024

Table of Contents

5 DISPLAY
7 ELECTRICAL COMPONENTS
9 SCALE COMPONENTS
11 PRINTER COMPONENTS
13 PANELS
15 CABLES

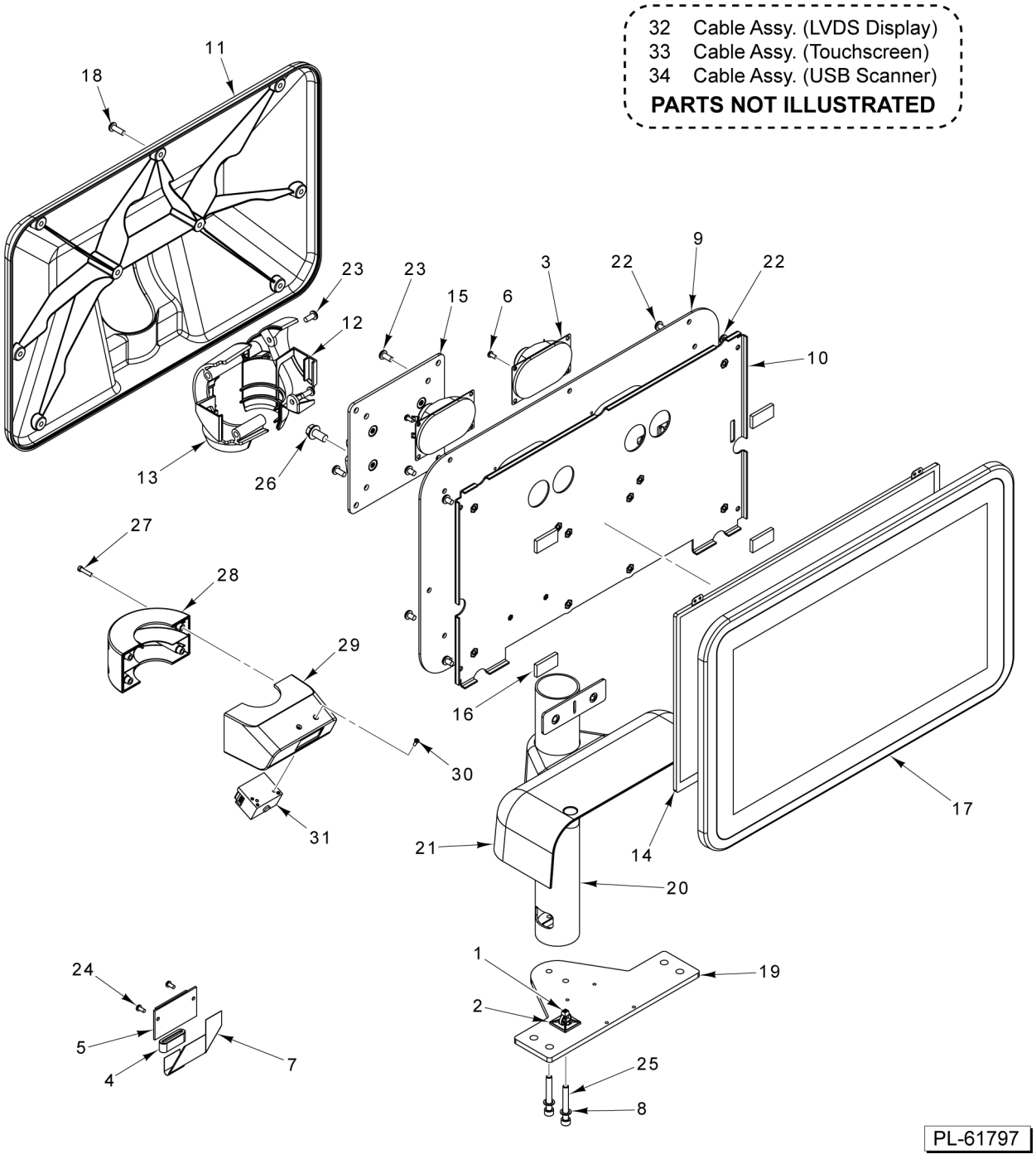
32 Cable Assy. (LVDS Display)
33 Cable Assy. (Touchscreen)
34 Cable Assy. (USB Scanner)
PARTS NOT ILLUSTRATED
11
18
23
23
15
6
3
22
9
22
12
10
13
26
27
28
29
16
30
31
17
21
14
20
24
5
4
7
1
19
2
25
8
PL-61797

DISPLAY

DISPLAY

ILLUS. PL-61797	PART NO.	NAME OF PART	AMT.
1	00-251199	Tie - Cable (4 In. Long)	5
2	00-255503	Mount - Cable Tie	1
3	00-447030	Speaker Assy	2
4	00-447066	Cable - Flex Ribbon (Ferrite)	1
5	00-448095	Board - LCD Interface	1
6	SD-033-14	Self-Tapping Screw 4-20 x 1/4 Phil. Pan Hd. Plastite	4
7	00-448197	Cable Assy. (FFC Display)	1
8	WL-008-13	Lockwasher #10 Internal Shakeproof	2
9	00-448221	Frame - Display	1
10	00-448222	Plate - Display Mounting	1
11	00-448224	Cover - Display Rear	1
12	00-448225	Cover - Left Hinge	1
13	00-448226	Cover - Right Hinge	1
14	00-448231	Display - Color (14 In. 1366 x 768)	1
15	00-448232	Hinge - Display	1
16	00-448342	Pad - Foam	4
17	00-448690	Touchscreen - Front Housing Assy	1
18	SC-132-16	Mach. Screw 8-32 x 1/2	9
19	45-000363	Mount - Display	1
20	45-000367	Post - Display	1
21	45-000369	Cover - Display Mount	1
22	SC-018-30	Mach. Screw 8-32 x 1/4 Phil. Pan Hd	8
23	SC-018-31	Mach. Screw 8-32 x 3/8 Phil. Pan Hd	6
24	SC-018-68	Mach. Screw 4-40 x 1/4 Phil. Pan Hd	2
25	SC-124-37	Cap Screw 10-24 x 1-3/8 Hex Socket Hd	2
26	SC-129-49	Mach. Screw 1/4-20 x 1/2 Hex Washer Hd. (SST)	2
27	SC-132-15	Mach. Screw 4-40 x 1/4	4
28	00-448229	Housing - Rear Scanner	1
29	00-448204	Housing Assy. Front Scanner	1
30	SD-039-84	Self-Tapping Screw 2-28 Phil. Pan Hd., Type TT	2
31	00-448234	Module - Scanner	1
32	00-448194	Cable Assy. (LVDS Display)	1
33	00-448198	Cable Assy. - Touchscreen	1
34	00-448196	Cable Assy. (USB Scanner)	1

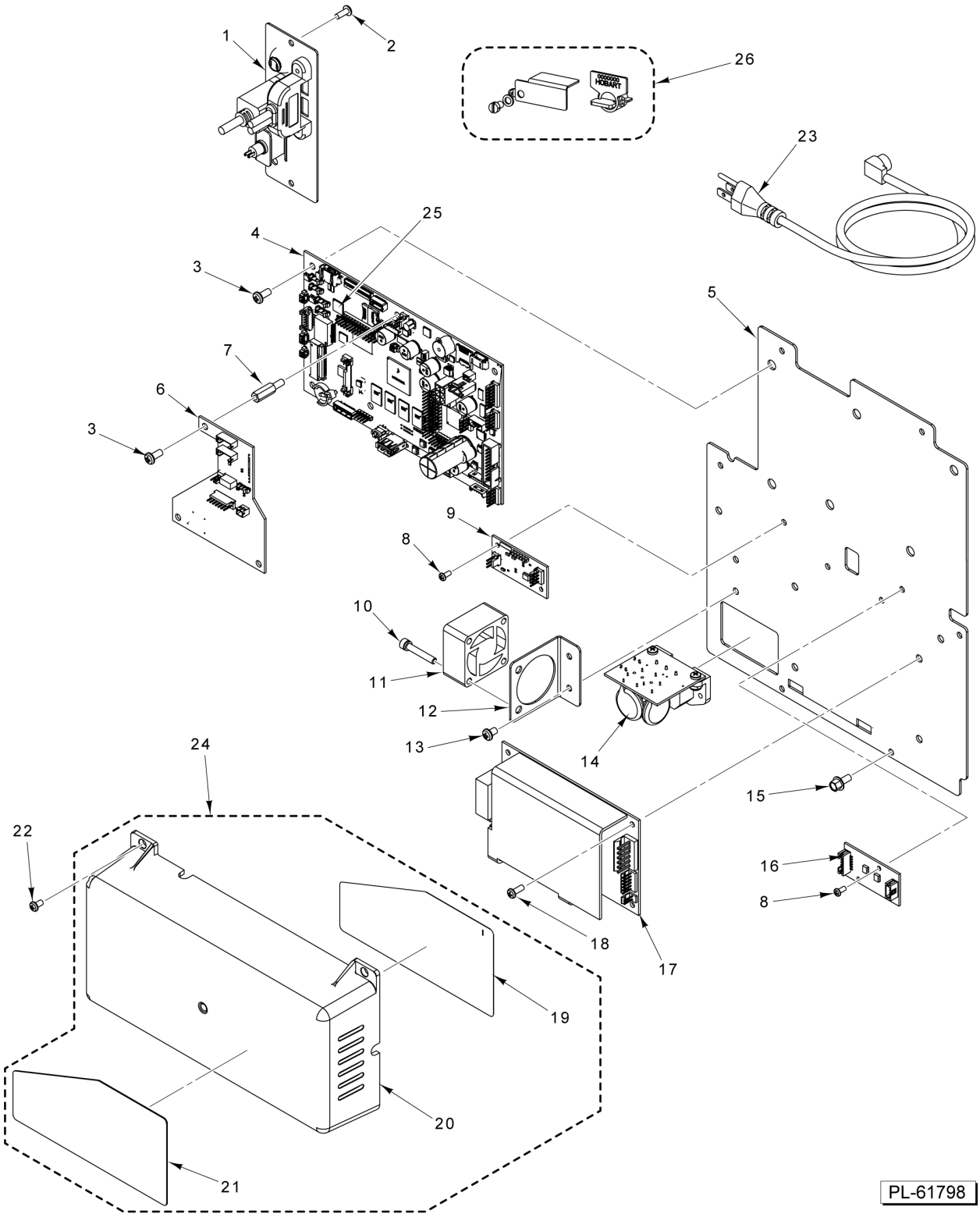

ELECTRICAL COMPONENTS

ELECTRICAL COMPONENTS

ILLUS. PL-61798	PART NO.	NAME OF PART	AMT.
1	45-000311	Bracket Assy. - Connectors (Incls. Cables)	1
2	SD-015-38	Self-Tapping Screw 6-32 x 3/8 Phil. Pan Hd., Type TT	AR
3	SC-018-31	Mach. Screw 8-32 x 3/8 Phil. Pan Hd	AR
4	00-449970-00002	Board - System Control (ARK - Dual)	1
5	45-000341	Plate - Electronics	1
6	45-000162	Board Assy. (FS Sensor Interface)	1
7	45-000344	Standoff	3
8	SC-018-68	Mach. Screw 4-40 x 1/4 Phil. Pan Hd	AR
9	00-450390	Control Board Assy. - Fan	1
10	SA-021-73	Screw	2
11	45-000280	Fan Assy. (FS Power)	1
12	45-000342	Bracket - Fan	1
13	SC-018-30	Mach. Screw 8-32 x 1/4 Phil. Pan Hd	AR
14	45-000550	Board - Power Input	1
15	SC-133-11	Screw 8-32 x 3/8	6
16	00-450170	Board Assy. - Cutter	1
17	00-443549-00002	Power Supply	1
18	SC-018-29	Mach. Screw 6-32 x 3/8 Phil. Pan Hd	4
19	00-447664	Label - Fuse	1
20	45-000343	Shroud - Power Supply	1
21	00-447665	Label - Battery	1
22	SC-018-28	Mach. Screw 6-32 x 1/4 Phil. Pan Hd	2
23	00-444769	Cable Assy. - DC Power	1
24	45-000458	Power Supply Shroud Assy. (Incls. Labels)	1
25	45-000640-00001	Micro SD - Programmed (Ver. 5.2.100)	1
26	00-448245	Kit - Security Seal (With Security Plate)	1

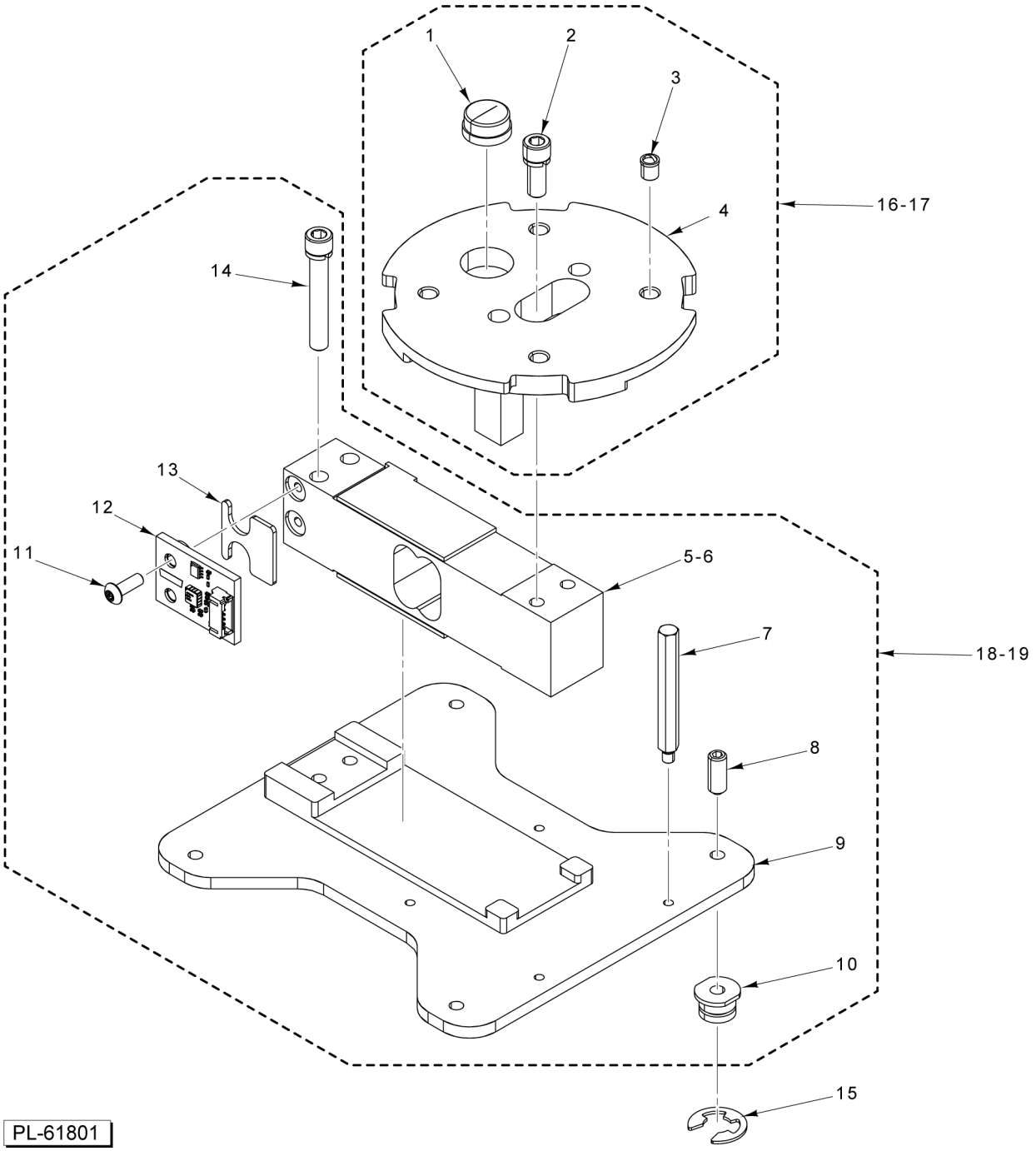

SCALE COMPONENTS

SCALE COMPONENTS

ILLUS. PL-61801	PART NO.	NAME OF PART	AMT.
1	00-043112	Level - Spirit	1
2	SA-021-57	Screw	2
3	45-000359	Spring Detent	4
4	45-000358	Mount - Bowl	1
5	00-443075	Load Cell - Multiple Range (15 kg) (Non ValueMax)	1
6	00-448560	Loadcell (15 kg) (ValueMax) (Incls. Items 11 thru 13)	1
7	45-000357	Standoff	4
8	SC-075-11	Set Screw 1/4-20 x 5/8 Hex Hdls., Kn. Cup Pt	4
9	45-000356	Base - Weigher	1
10	45-000354	Retainer	4
11	SC-128-66	Mach. Screw 8-32 x 3/8 Tx. Button Hd	2
12	00-449950	Board Assy. (Accelerometer)	1
13	00-450137	Spacer	1
14	SA-021-56	Screw	2
15	RR-004-25	Retaining Ring	4
16	45-000361	Bowl Mount Assy. (Non ValueMax)	1
17	45-000553	Bowl Mount Assy. (ValueMax)	1
18	45-000360	Weigher Assy. (ValueMax)	1
19	45-000450	Weigher Assy. (Non ValueMax)	1

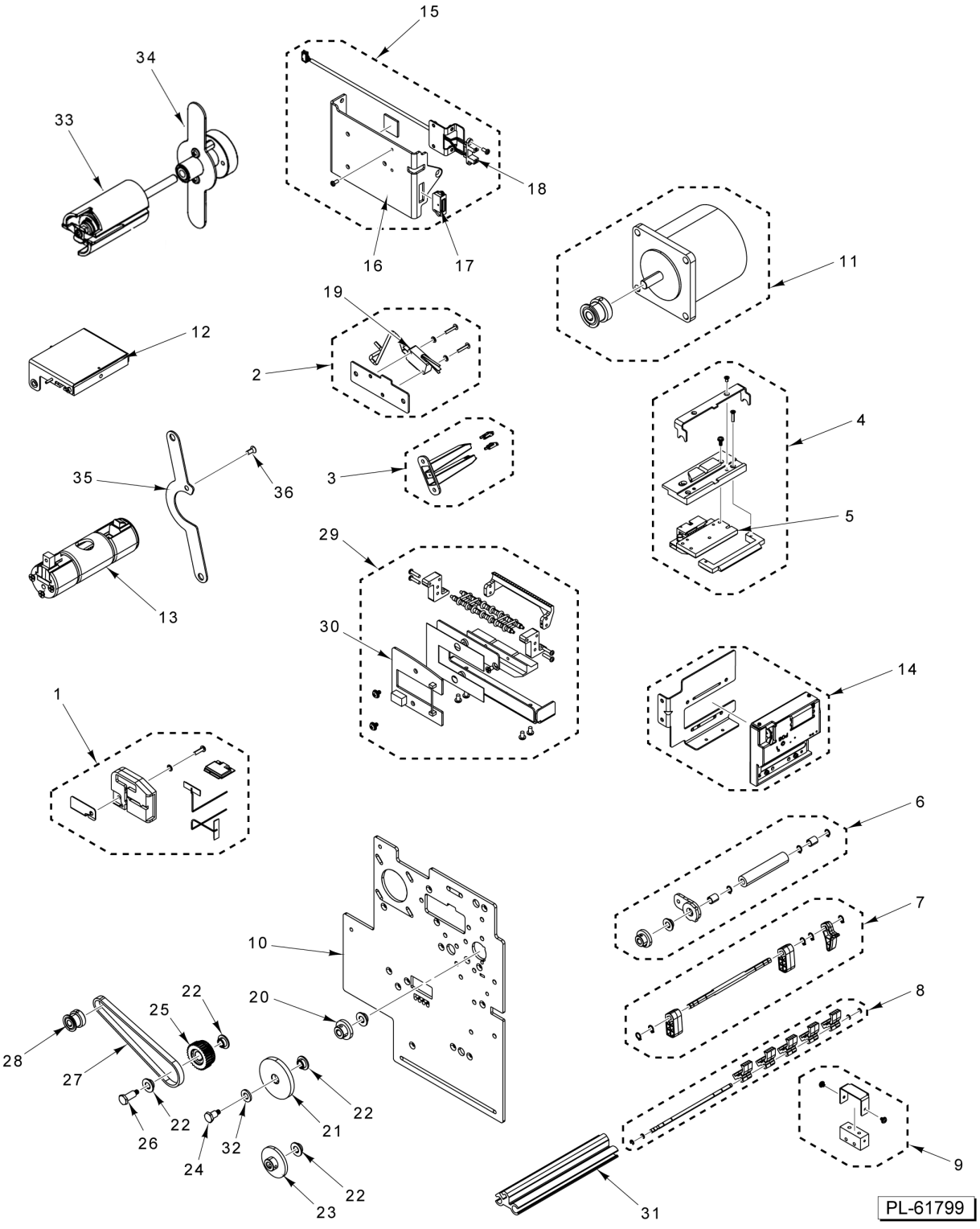

PRINTER COMPONENTS

PRINTER COMPONENTS

ILLUS. PL-61799	PART NO.	NAME OF PART	AMT.
1	45-000380	Kit - Antenna Assy. (Incls. Cables & Wifi Module)	1
2	45-000305	Kit - Head Up Plate Assy	1
3	45-000326	Kit - Shoot Through Sensor Assy. (Incls. Cables)	1
4	45-000270	Kit - Printhead and Heatsink Assy. (Incls. Item 5)	1
5	00-448003	Printhead - Thermal	1
6	45-000292	Print Roller Mount Assy	1
7	45-000336	Lever and Arm Assy	1
8	45-000282	Peel Bar and Label Stripper Assy	1
9	45-000308	Kit - Low Stock Sensor Assy	1
10	45-000289	Plate - Printer	1
11	00-449489	Motor Assy. - Stepper	1
12	45-000310	Printhead Mount Assy	1
13	45-000230	Self Centering Hub Assy	1
14	45-000225	Kit - Cutter Assy. (Side Loading)	1
15	45-000350	Kit - Bracket Panel Assy	1
16	45-000348	Bracket - Interlock and Magnets	1
17	45-000263	Magnet	1
18	45-000334	Sensor Assy. - Cutter Interlock	1
19	00-441934	Switch Assy. - Head Up Sensor	1
20	00-043360	Gear - Roller (Incls. Set Screw)	1
21	00-043361	Gear - Idler	3
22	00-043365	Bushing	AR
23	00-043362	Gear - Take-Up (Incls. Set Screw)	1
24	45-000178	Shaft - Idler	1
25	45-000239	Pully and Gear Assy	1
26	45-000179	Shaft - Pully and Gear	1
27	45-000320	Belt - Stepper Motor	1
28	00-442822	Pulley - Take-Up Motor	1
29	45-000296	Kit - Label Taken and Exit Rollers Assy	1
30	00-441823	Board - Label Taken Sensor	1
31	45-000287	Support	1
32	00-043269	Washer (Roller Top)	3
33	45-000180	Assy, Take-Up	1
34	45-000216	Assy, Take-Up Mounting	1
35	45-000427	Plate - Supply Roll	1
36	SC-132-67	Screw	1

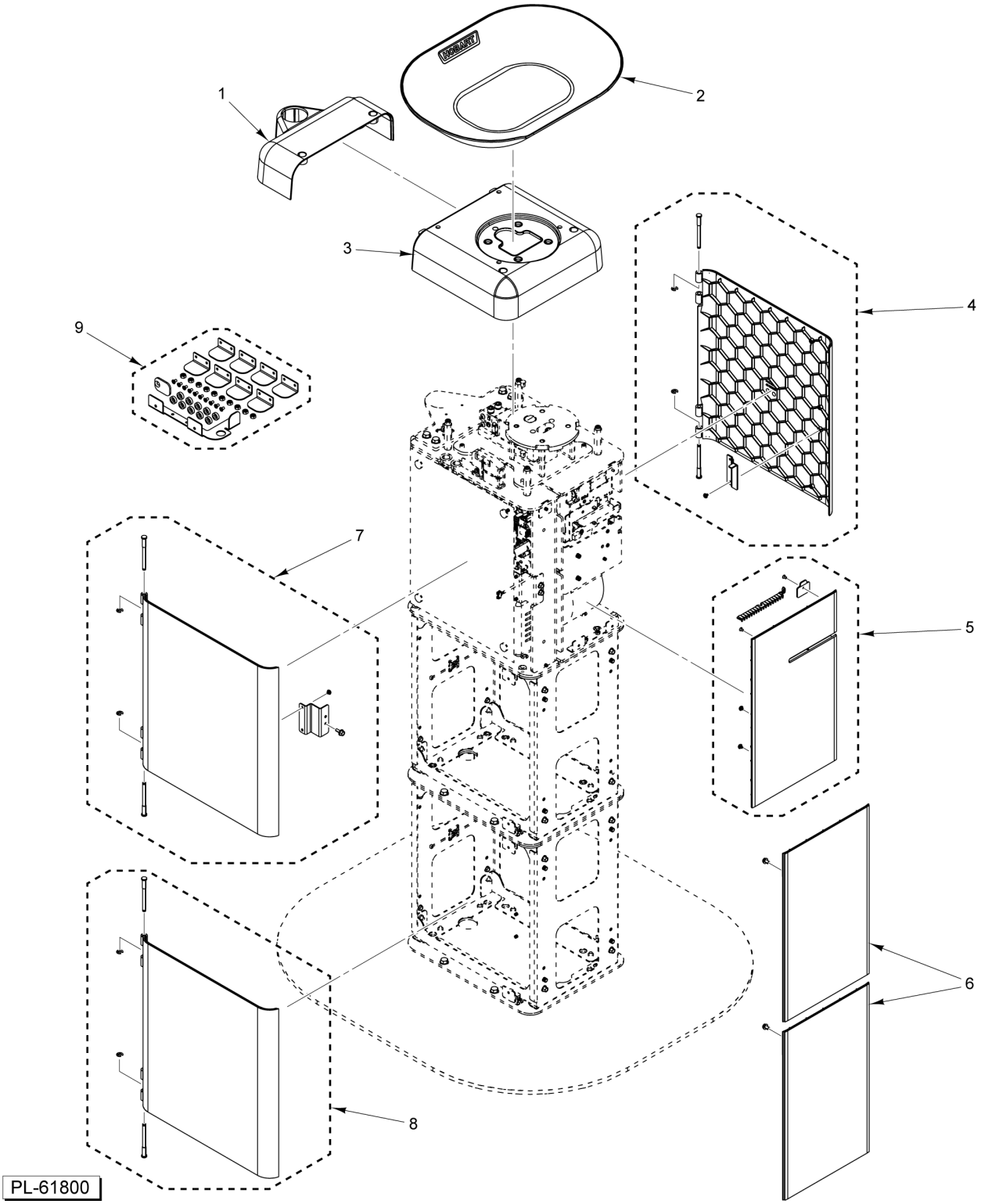

PANELS

PANELS

ILLUS. PL-61800	PART NO.	NAME OF PART	AMT.
1	45-000369	Cover - Display Mount	1
2	45-000370	Bowl	1
3	45-000368	Cover - Weigher	1
4	45-000441	Kit - Panel Assy. (Printer Interlock)	1
5	45-000442	Kit - Panel Assy. (Printer Front)	1
6	45-000250	Panel - Front	2
7	45-000443	Kit - Panel Assy. (Printer Electronics)	1
8	45-000444	Kit - Panel Assy. (Post Door)	1
9	45-000733	Kit - Bracket and Door Panel Magnets	1

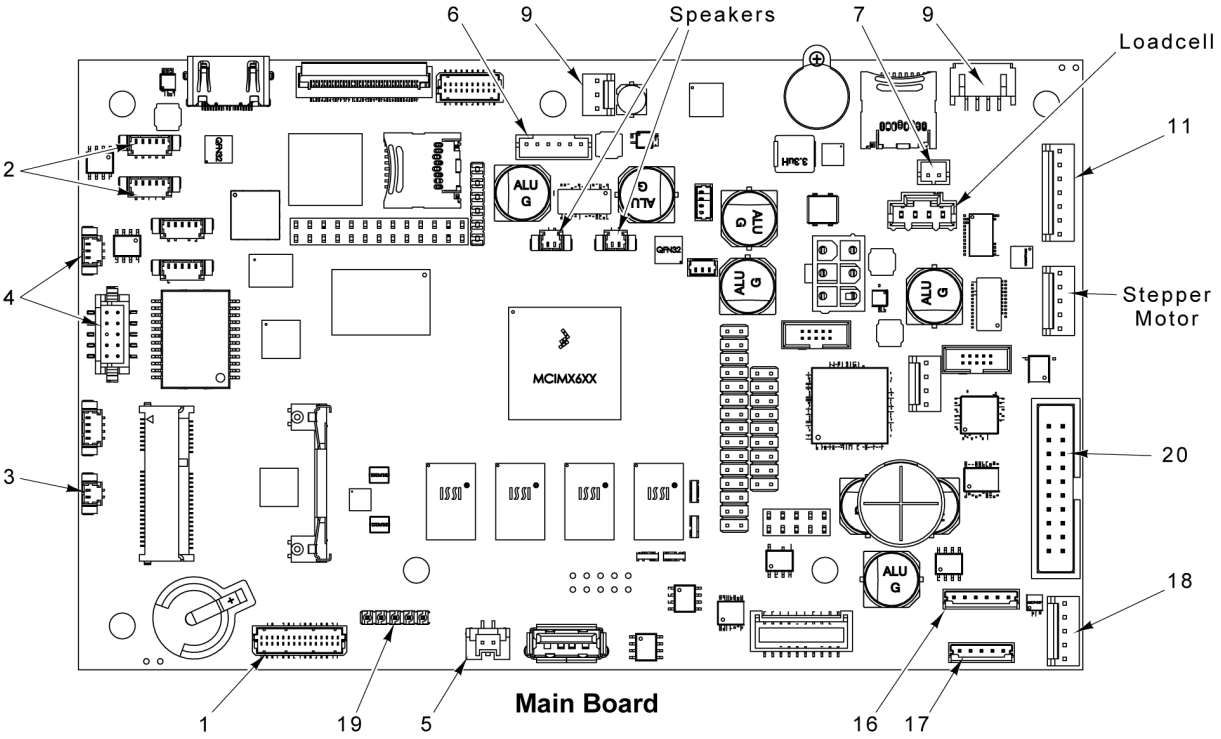

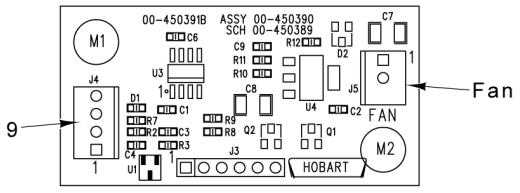

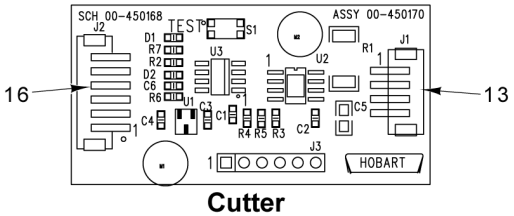

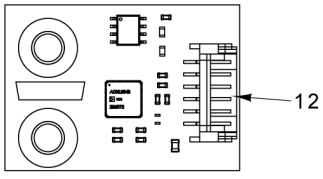

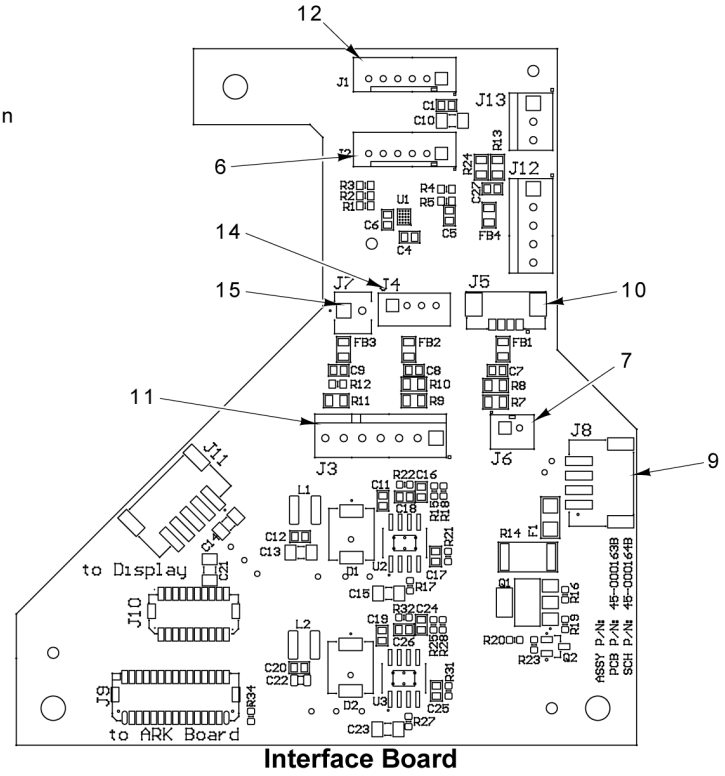

PL-61834

CABLES

CABLES

ILLUS. PL-61834	PART NO.	NAME OF PART	AMT.
1	00-448199	Cable Assy. - LVDS (Operator Display)	1
2	00-448025	Cable Assy. - Dual Mount USB	1
3	00-447882	Switch Assy. (Shutdown)	1
4	00-448024	Cable Assy. - Ethernet	1
5	00-448026	Cable Assy. - Service Switch	1
6	45-000190	Cable Assy. - Sensor Communication	1
7	45-000188	Cable Assy. - Feedback Shoot Through	1
8	45-000189	Cable Assy. - Feedback Low Label	1
9	45-000157	Cable Assy. - Fan/Interface Power	1
10	45-000326	Kit - Shoot Through Sensor Assy	1
11	45-000187	Cable Assy. - Feedback Label Taken	1
12	00-449964	Cable Assy. (Accelerometer Jumper) (ValueMax)	1
13	00-450314	Cable Assy. (Cutter)	1
14	00-450314	Cable Assy. (Cutter)	1
15	00-441934	Switch Assy. - Head Up Sensor	1
16	00-450312	Cable Assy. (Cutter Control)	1
17	00-450313	Sensor Assy. - Cutter Interlock	1
18	00-450039	Cable Assy. (LTS Adapter)	1
19	00-448198	Cable Assy. - Touchscreen	1
20	45-000158	Cable Assy. - Printhead	1