HOBART

CATALOG OF REPLACEMENT PARTS



GAS COMBI OVENS

CG10FI **ML-138048**

A product of HOBART 701 S. RIDGE AVENUE TROY, OHIO 45374-0001

FORM 43216 (April 2010)

TABLE OF CONTENTS

3 CONTROL PANEL
5 ELECTRICAL COMPONENTS
7 DOOR
9 FRAME & PANELS
10 DRAIN ASSEMBLY
11 GAS COMPONENTS
13 WASH ARM & DETERGENT PUMP
15 BOILER AND FLUE
16 CONVECTION UNIT

 © HOBART

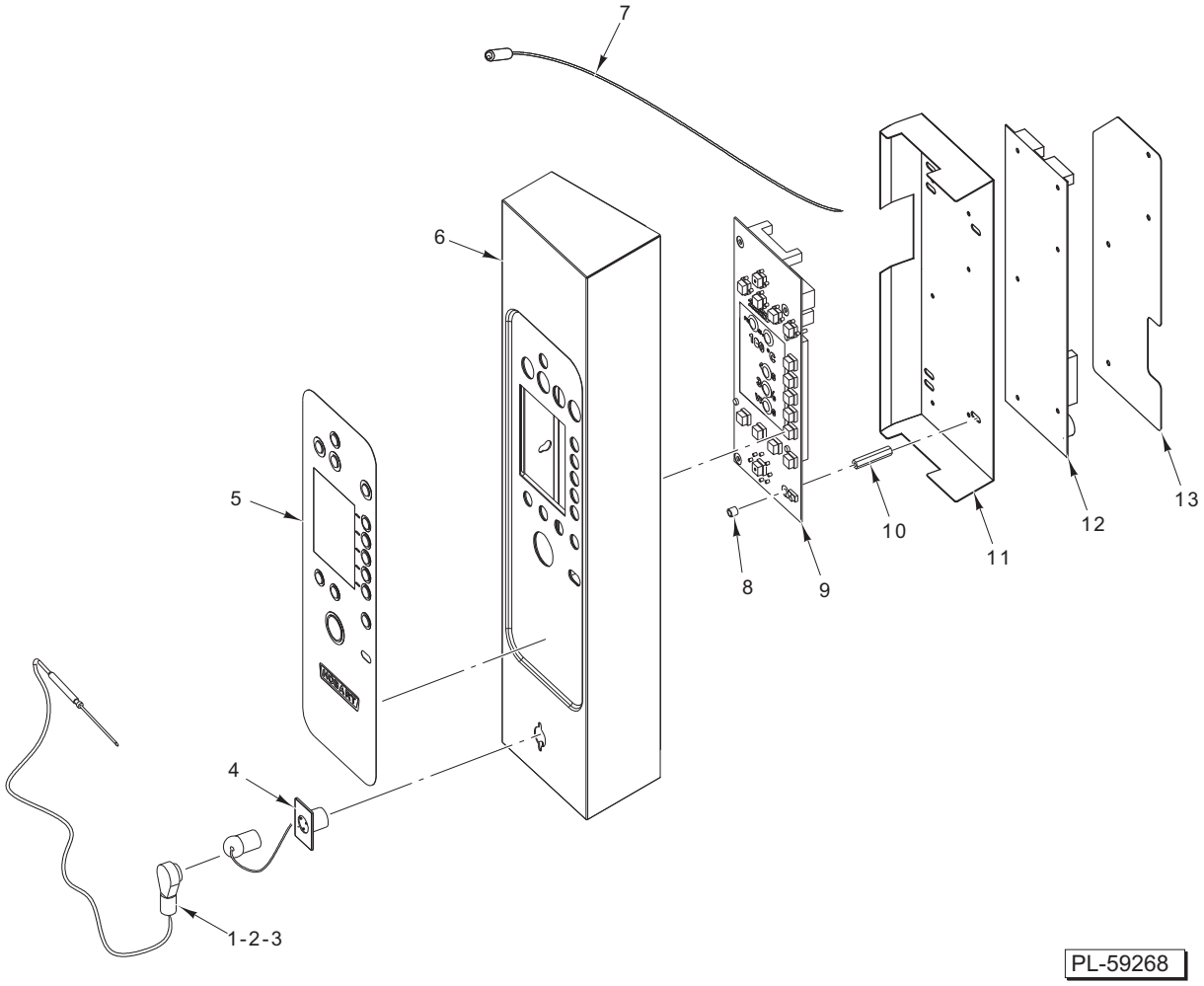

CONTROL PANEL

ILLUS. PL-59268	PART NO.	NAME OF PART	AMT.
1	01-235722	Probe – Core (6 Pin) (2mm) (SV)	1
2	01-235582	Probe – Single Point (6 Pin) (Std.)	1
3	01-235720	Probe – Multi-Point (6 Pin) (4mm)	1
4	01-235616	Connector – Core Probe	1
5	01-235718	Overlay – Digital Combi Control	1
6	01-235624	Panel – Control	1
7	01-235830	Sensor – Door Switch	1
8	01-235371	Spacer – Display Cover	AR
9	01-235005	Board – Digital Display	1
10	01-235610	Spacer – Cover	4
11	01-235367	Cover – Display Board	1
12	01-235019	Board – Digital CPU	1
13	01-235903	Board – Cover CPU	1

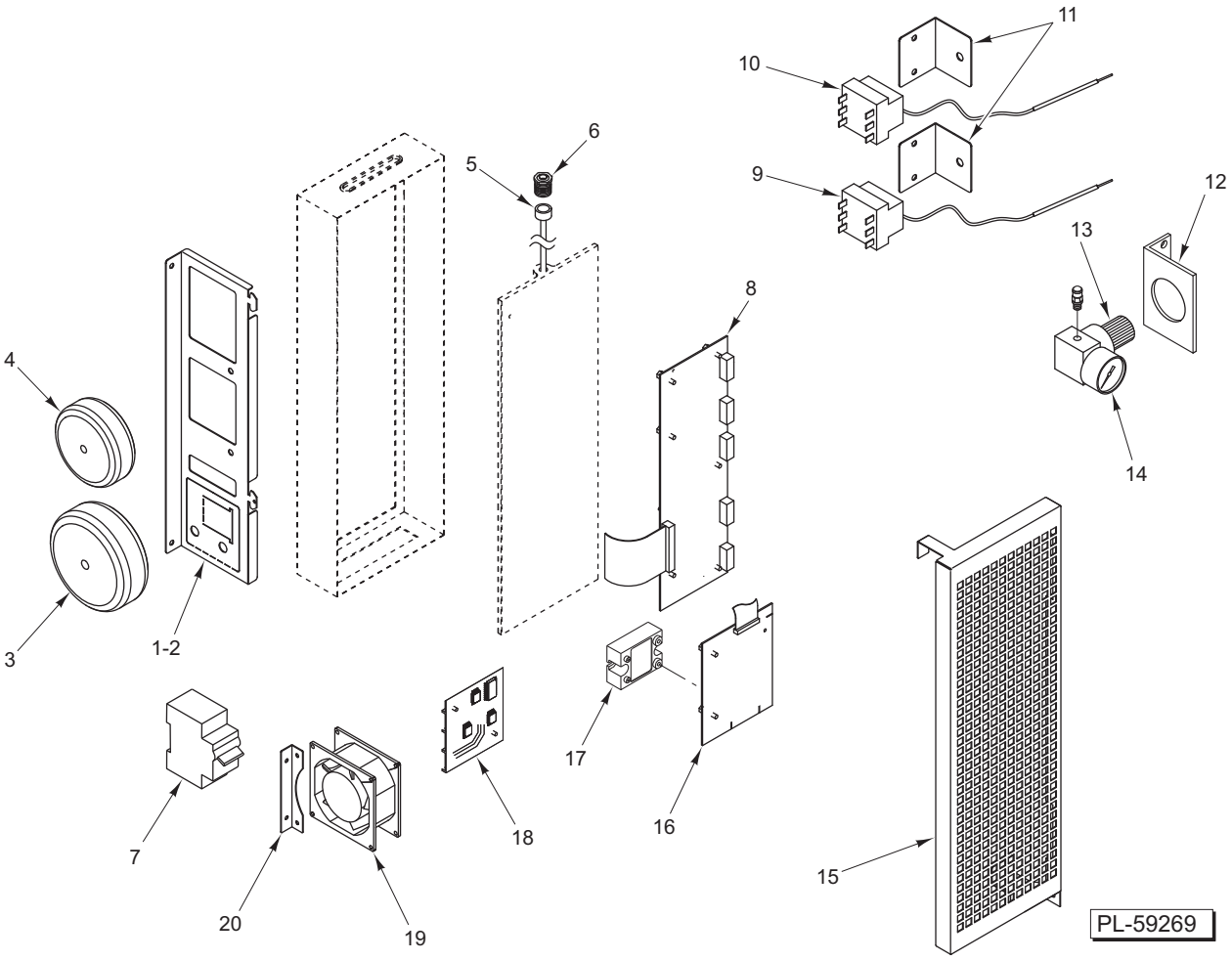

ELECTRICAL COMPONENTS

ELECTRICAL COMPONENTS

ILLUS. PL-59269	PART NO.	NAME OF PART	AMT.
1	01-235562	Support – Control Housing	1
2	01-235904	Support – Display Board	1
3	01-235782	Transformer	1
4	01-235640	Transformer (20 V.)	1
5	01-235254	Tubing – Clear (8mm Dia.)	AR
6	01-235263	Fitting – Water Inlet	1
7	01-235797	Breaker – Circuit (400 V.)	1
8	01-235201	Board – Gas Relay	1
9	01-235908	Thermostat – Safety Generator (500 Deg. Limit For Boiler)	1
10	01-235909	Thermostat – Safety Cavity (680 Deg. Limit For Cavity)	1
11	01-235910	Support – Fixing Limit & Engine	2
12	01-235556	Bracket – Regulator Support	1
13	01-235558	Regulator	1
14	01-235557	Gauge – Pressure	1
15	01-235905	Cover – Board Assy. Protection	1
16	01-235011	Board – Power Supply	1
17	01-235004	Relay – Solid State Motor (25 Amp.)	1
18	01-235912	Board – Control Steam/Convection (Red Relay Board)	1
19	01-235907	Fan – Cooling	1
20	01-235906	Support – Cooling Fan	1
	01-236039	Capacitor – Motor (12.5 microF)	1

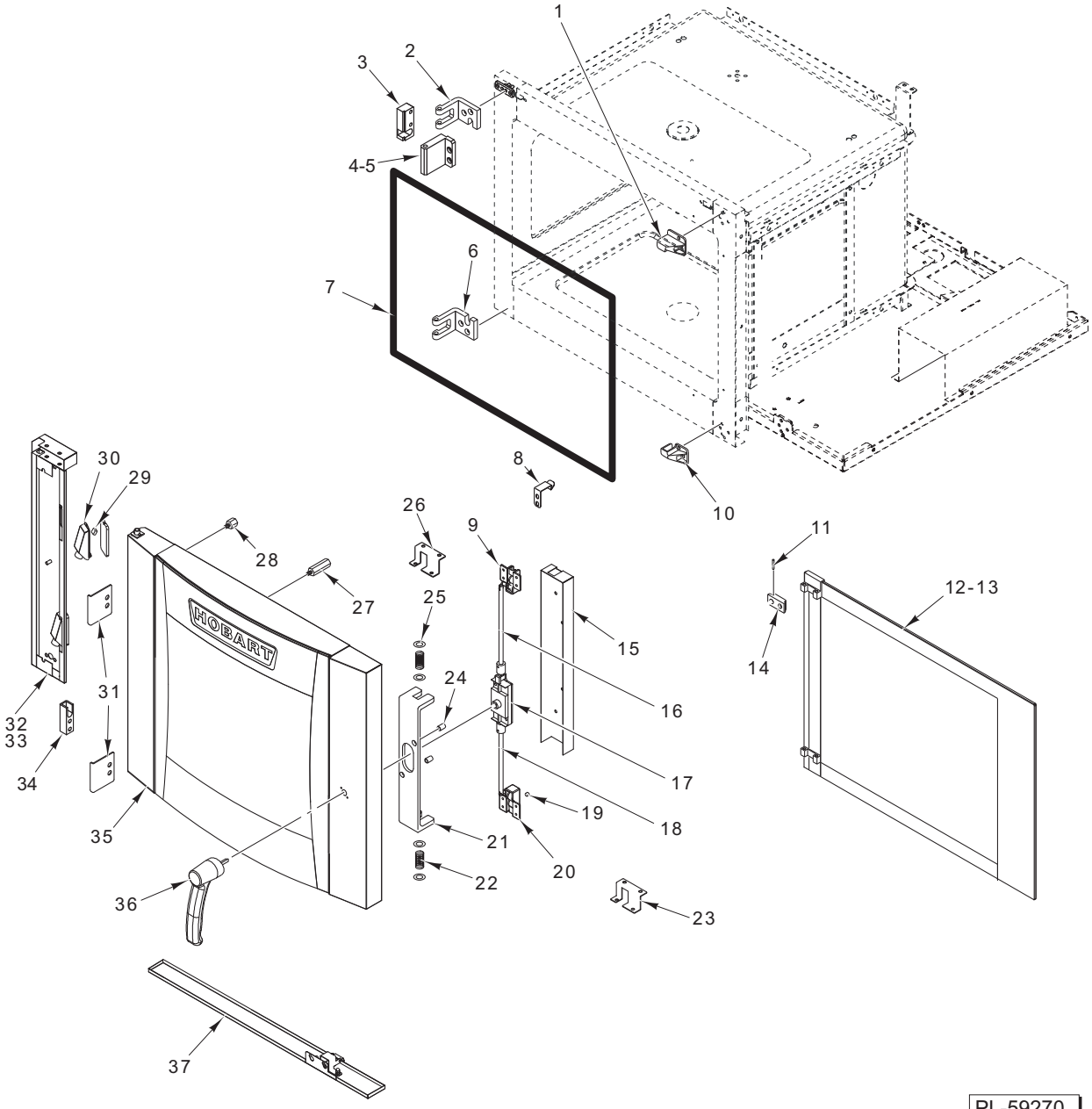
1
2
3
4-5
6
7
8
9
10
11
12-13
14
15
16
17
18
19
20
21
22
23
24
25
26
27
28
29
30
31
32
33
34
35
36
37
HOBART
PL-59270

DOOR

DOOR

ILLUS. PL-59270	PART NO.	NAME OF PART	AMT.
1	01-235466	Catch – Left Bottom Or Right Top Door	1
2	01-235455	Hinge – Left Top Or Right Bottom	1
3	01-235764	Cover – Door Light Block	1
4	01-235763	Cover – Door Light (LH)	1
5	01-235833	Cover – Door Light (RH)	1
6	01-235461	Hinge – Left Bottom Or Right Top	1
7	01-235313	Gasket – Door	1
8	01-235781	Clip – Internal Glass Spring	1
9	01-235463	Latch Mechanism	1
10	01-235467	Catch – Left Top Or Right Bottom Door	1
11	01-235344	Pin – Internal Glass Hinge	1
12	01-235578	Glass Assy. – Internal (LH)	1
13	01-235579	Glass Assy. – Internal (RH)	1
14	01-235323	Hinge – Internal Glass	1
15	01-235778	Cover – Door Latch (LH)	1
16	01-235464	Rod – Left Bottom Or Right Top Door Latch	1
17	01-235459	Mechanism – Door Handle	1
18	01-235465	Rod – Left Top Or Right Bottom Door Latch	1
19	01-235123	Magnet – Door Switch	1
20	01-235463	Latch Mechanism	1
21	01-235553	Bracket Door – Spring	1
22	01-235554	Spring – Door Latch	2
23	01-235714	Bracket – Cover Mounting	1
24	01-235462	Spacer – Latch Assy.	2
25	01-235555	Washer – Door Latch Spring	2
26	01-235714	Bracket – Cover Mounting	1
27	01-235469	Spacer – Long Glass	1
28	01-235327	Spacer – Short Glass	1
29	01-235342	Lamp – Halogen	3
30	01-235893	Holder – Lamp	3
31	01-235716	Block – Door Rotation (LH)	1
32	01-235772	Support – Lampholder (LH)	1
33	01-235768	Holder – Internal Lamp (RH)	1
34	01-235765	Cover – Door Light Block (Door Side)	1
35	01-235825	Door Assy. (Left Hinged)	1
36	01-235687	Handle – Door	1
37	01-235680	Tray – Drip (LH)	1
	01-236021	Kit – Retrofit Solution (Door Magnet)	1

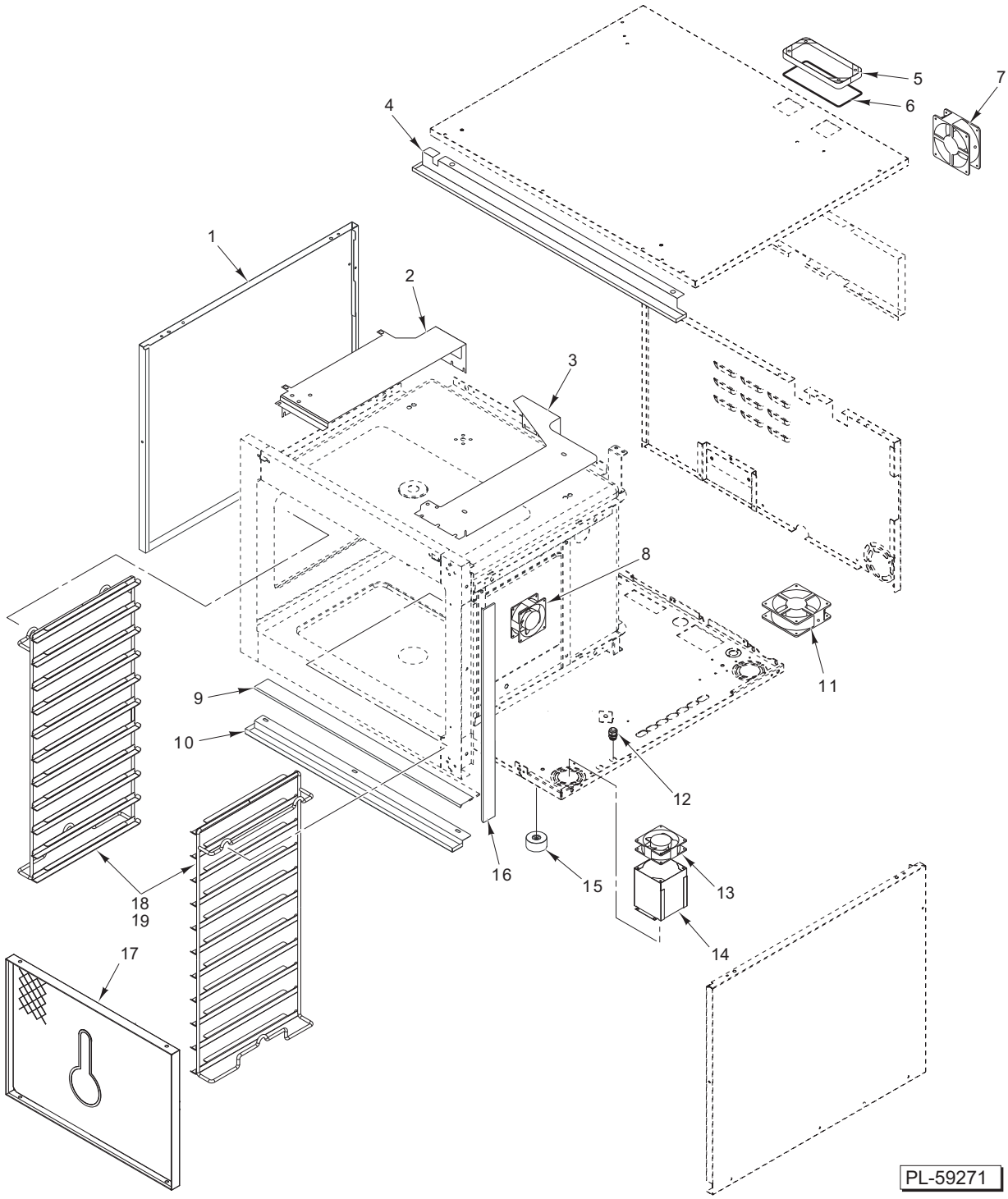

FRAME & PANELS

FRAME & PANELS

ILLUS. PL-59271	PART NO.	NAME OF PART	AMT.
1	01-235623	Panel – Left Side	1
2	01-235621	Clamp – Left Top Support	1
3	01-235620	Clamp – Right Top Support	1
4	01-235602	Gutter – Oven Top	1
5	01-235605	Enclosure – Water Box Holes	1
6	01-235606	Gasket – Water Box Holes	1
7	01-235308	Fan – Cooling	1
8	01-235308	Fan – Cooling	1
9	01-235306	Gasket – Control Panel	AR
10	01-235703	Tray – Cavity Drip	1
11	01-235308	Fan – Cooling	1
12	01-235929	Grommet – Electric Cable	1
13	01-235308	Fan – Cooling	1
14	01-235902	Conveyor – Heat	1
15	01-235307	Foot (40mm)	4
16	01-235306	Gasket – Control Panel	AR
17	01-235641	Guard – Fan	1
18	01-236035	Guide – Rack 10F (Side Mounting) (Set of 2)	1
19	01-236036	Guide – Rack 10F (Top / Bottom Mounting) (Set of 2)	1

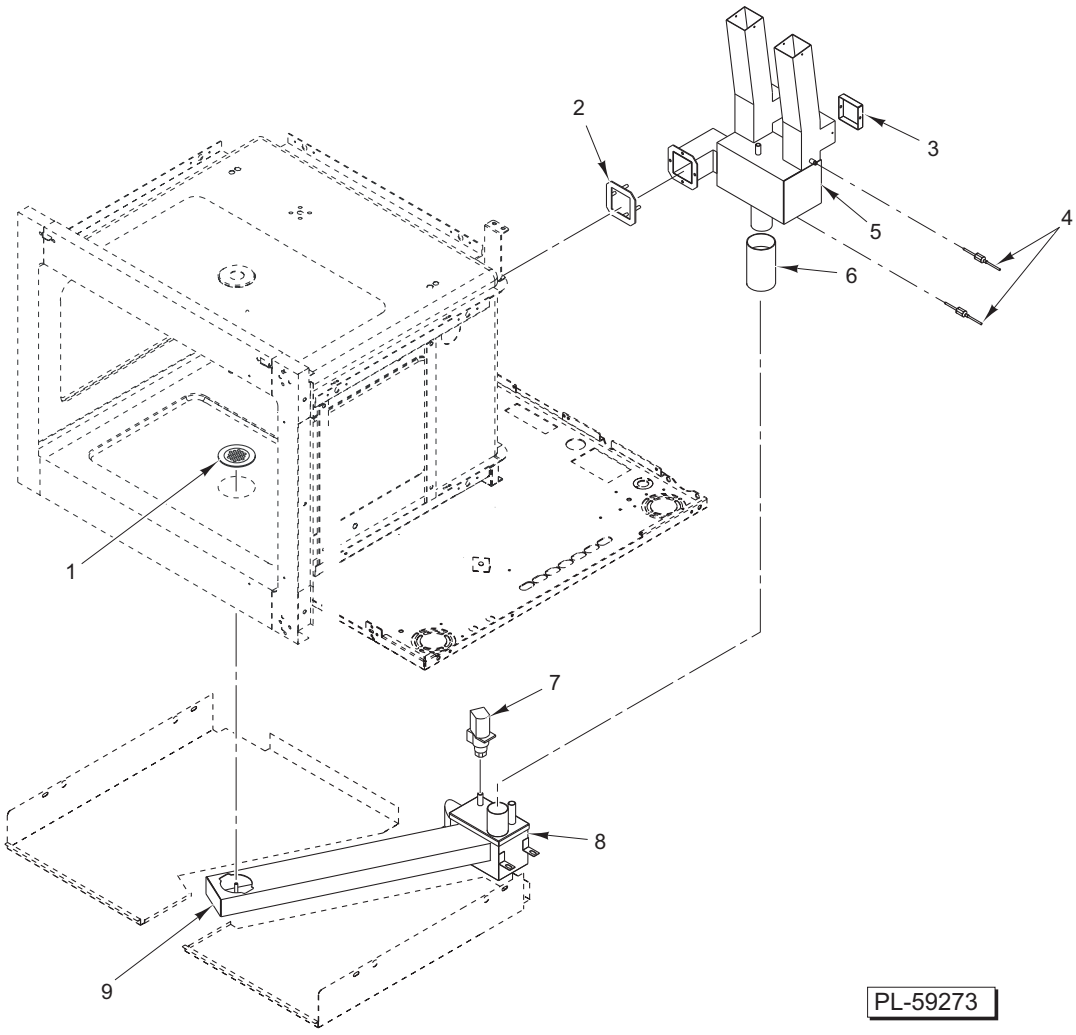

DRAIN ASSEMBLY

ILLUS. PL-59273	PART NO.	NAME OF PART	AMT.
1	01-235889	Grid – Drain	1
2	01-235436	Flange – Vent Box Coupling	1
3	01-235420	Plug – Vent Box	1
4	01-235369	Probe – Temperature	2
5	01-235513	Box – Vent	1
6	01-235422	Pipe – Rubber	1
7	01-235424	Valve – Vent Box Solenoid	1
8	01-235426	Cover – Drain Box Inspect	1
9	01-235891	Tube – Drain	1

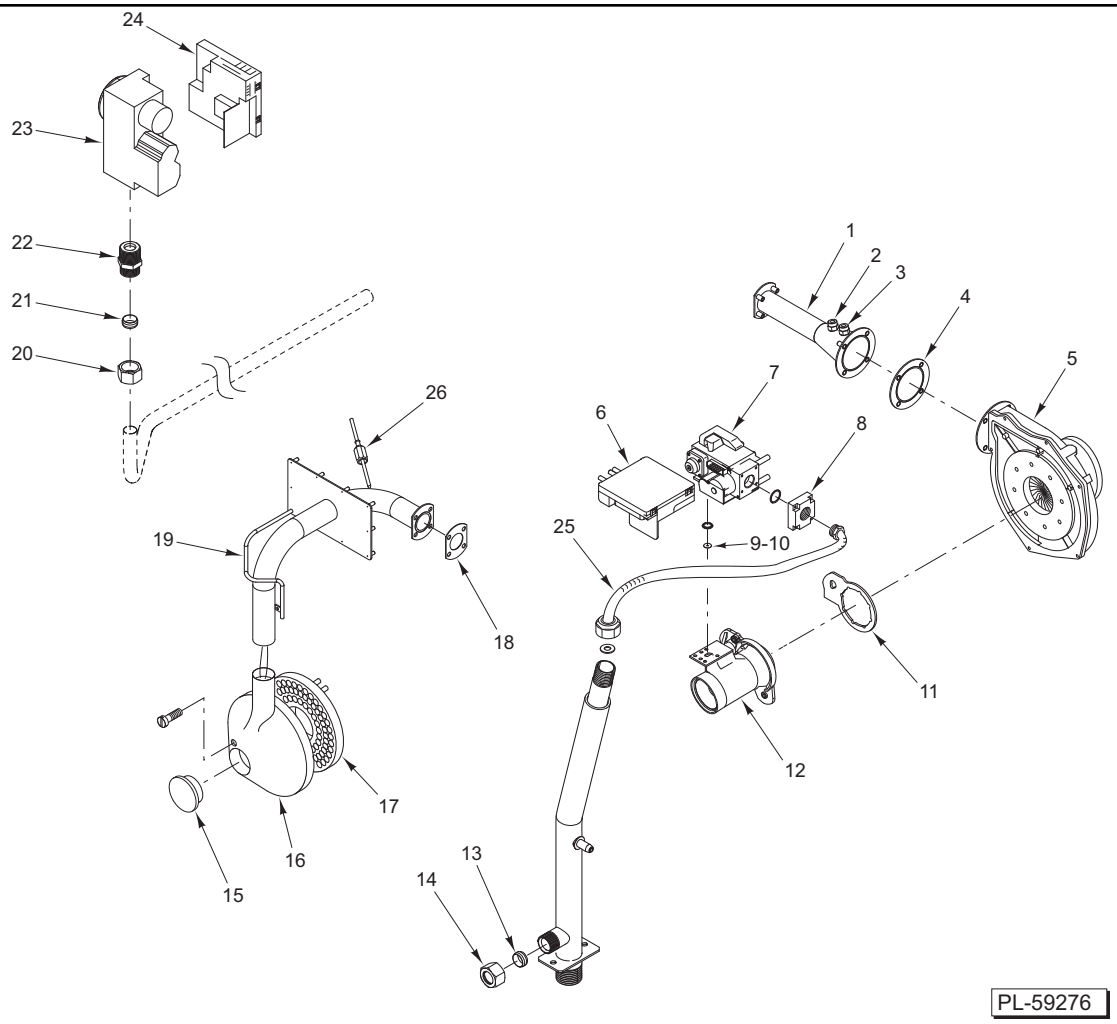

GAS COMPONENTS

ILLUS. PL-59276	PART NO.	NAME OF PART	AMT.
1	01-235664	Burner Assy.	1
2	01-236037	Ignition Spark Assy.	1
3	01-236038	Flame Sense Assy.	1
4	01-235650	Gasket – Burner Tube	1
5	01-235652	Mixer – Gas	1
6	01-235656	Board – Ignition Module	1
7	01-235655	Valve	1
8	01-235668	Flange (1/2 In.)	1
9	01-235675	Baffle – Antislosh (3.9mm)	1
10	01-235674	Baffle – Antislosh (2.8mm)	1
11	01-235670	Gasket – Cork	1
12	01-235657	Tube – Venturi	1
13	01-235918	Valve – Gas Bicone	1
14	01-235919	Valve – Gas Nut	1
15	01-235651	Stopper – Burner Close	1
16	01-235661	Dowel – Plane	1
17	01-235660	Burner	1
18	01-235654	Gasket – Tube	1
19	01-235645	Pipe – External Vaporizer	1
20	01-235919	Valve – Gas Nut	1
21	01-235918	Valve – Gas Bicone	1
22	01-235917	Pipe – Gas Valve (3/4 In.)	1
23	01-235912	Board – Steam/Convection Control	1
24	01-235656	Board – Ignition Module	1
25	01-235669	Pipe – Flexible Gas	1
26	01-235369	Probe – Temperature	1

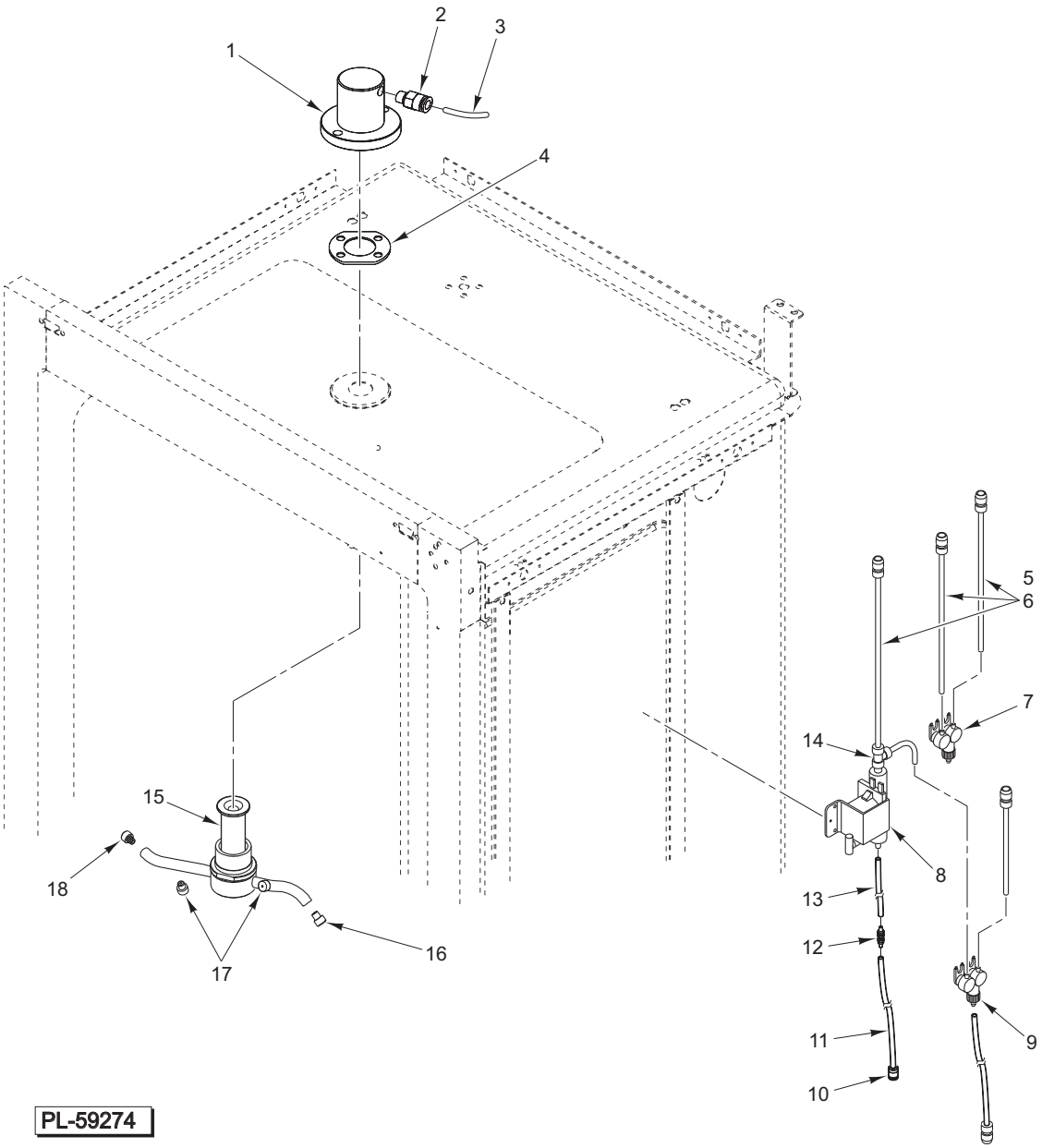

WASH ARM & DETERGENT PUMP

WASH ARM & DETERGENT PUMP

ILLUS. PL-59274	PART NO.	NAME OF PART	AMT.
1	01-235883	Holder – External Tourniquet	1
2	01-235885	Pipe – Holder Connector	1
3	01-235877	Tube – Detergent Pump	1
4	01-235654	Gasket – Tube	1
5	01-235256	Tubing – Red (8mm Dia.)	AR
6	01-235254	Tubing – Clear (8mm Dia.)	AR
7	01-235250	Valve – Dual Solenoid	1
8	01-235818	Pump – Detergent (110 V. - 120 V.)	1
9	01-235250	Valve – Dual Solenoid	1
10	01-235866	Tube – Weight & Filter	1
11	01-235411	Tube – Detergent	1
12	01-235899	Connector – Detergent Pump Tube	1
13	01-235877	Tube – Detergent Pump	1
14	01-235253	Fitting – Tee (8mm Dia.)	1
15	01-235884	Drive Assy. – Wash	1
16	01-235399	Injector – Wash	1
17	01-235399	Injector – Wash	2
18	01-235400	Injector – Wash (1.5mm)	1
	01-235819	Cable – Detergent Pump	1

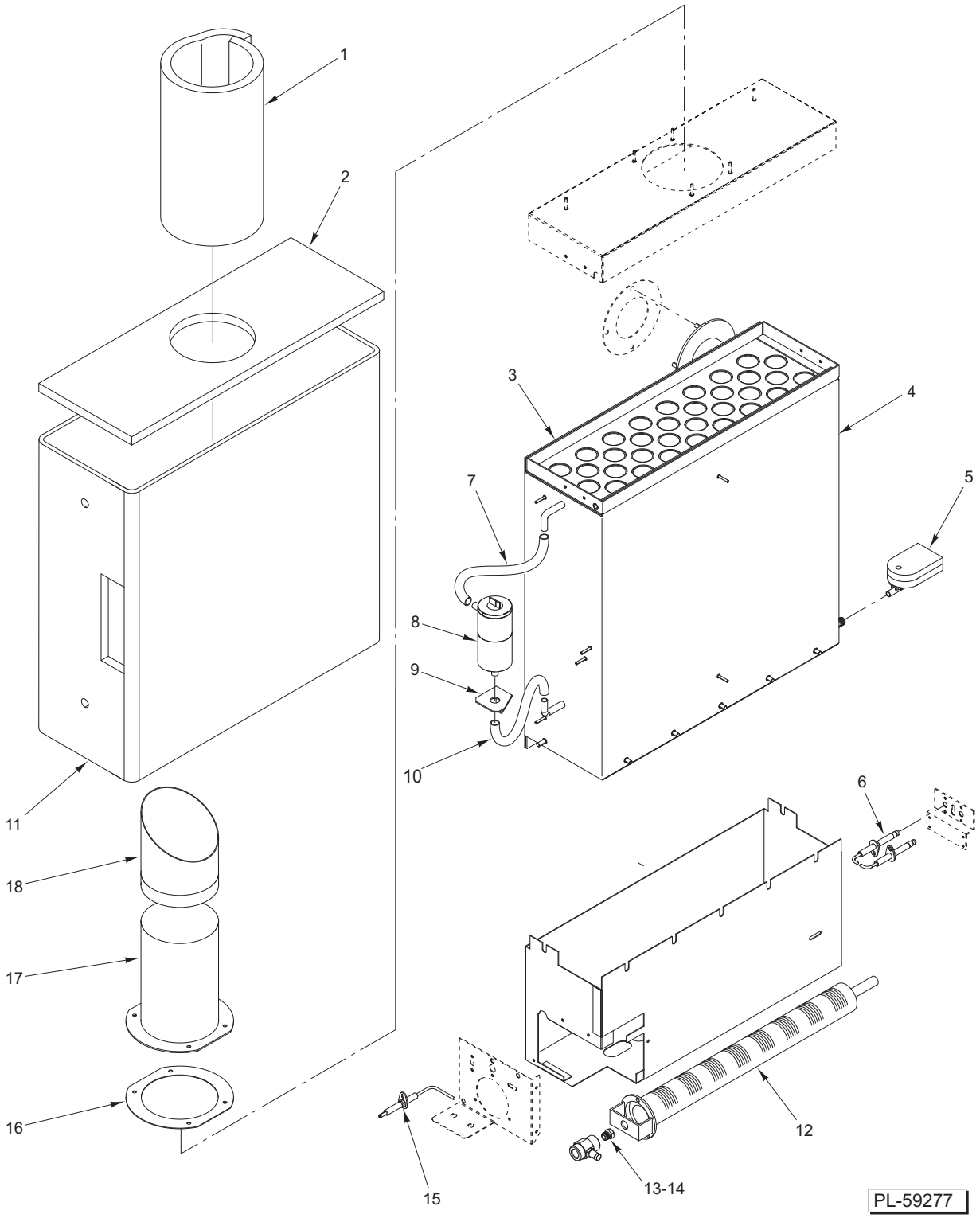

BOILER AND FLUE

BOILER AND FLUE

ILLUS. PL-59277	PART NO.	NAME OF PART	AMT.
1	01-235923	Band – Insulating	1
2	01-235924	Insulation – Upper	1
3	01-235914	Baffle	1
4	01-235915	Boiler	1
5	01-235916	Valve – Boiler Drain	1
6	01-235922	Plug – Spark	1
7	01-235888	Pipe – Water Supply	1
8	01-235886	Level – Boiler Water	1
9	01-235887	Support – Boiler Water Level	1
10	01-235888	Pipe – Water Supply	1
11	01-235925	Band – Insulating	1
12	01-235921	Burner	1
13	01-235930	Injector – Boiler (1/4 In.) (340 K.)	1
14	01-235931	Injector – Boiler (1/4 In.) (230 K.)	1
15	01-235920	Boiler – Flame Sensor	1
16	01-235928	Gasket	1
17	01-235927	Chimney – Boiler	1
18	01-235926	Chimney Assy.	1

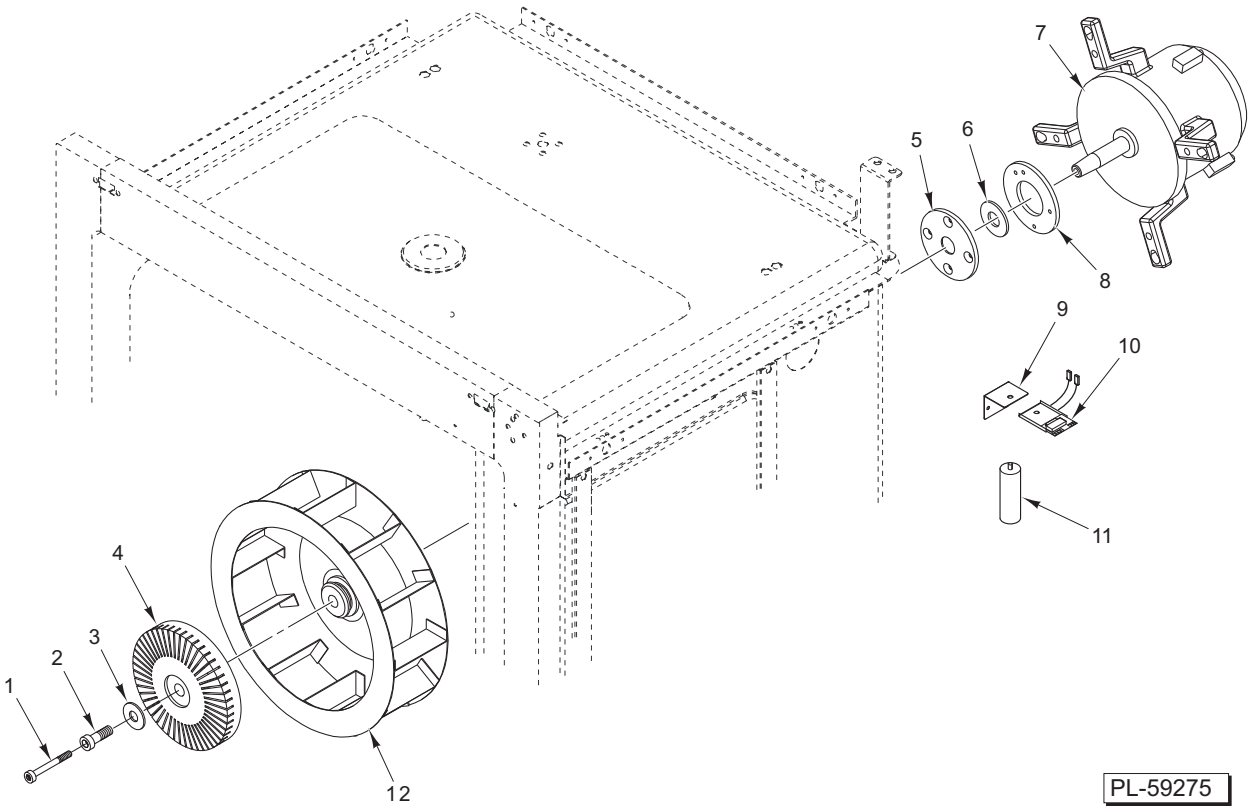

CONVECTION UNIT

ILLUS. PL-59275	PART NO.	NAME OF PART	AMT.
1	01-235663	Screw – Inner Motor	1
2	01-235662	Screw – Outer Motor	1
3	01-235665	Washer	1
4	01-235653	Diffuser – Vapor	1
5	01-235394	Flange – Motor Coupling	1
6	01-235396	Gasket – Drive Shaft Ring	1
7	01-235865	Motor – Fan	1
8	01-235395	Flange – C	1
9	01-235910	Support – Fixing Limit & Engine	1
10	01-235012	Board – Motor Reverse	1
11	01-236039	Capacitor – Motor	1
12	01-235666	Fan	1