HOBART

CATALOG OF REPLACEMENT PARTS

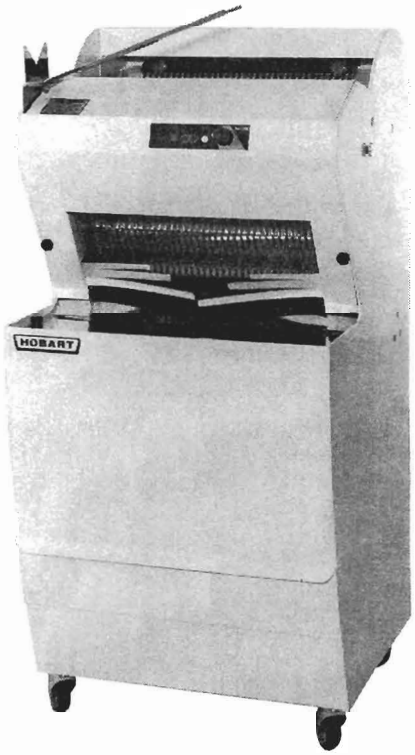

MODEL HAB500
BREAD SLICER

HAB500 ML-104845

A product of HOBART CORPORATION 701 S. RIDGE AVENUE TROY, OHIO 45374-0001

FORM 34322 (7-99)

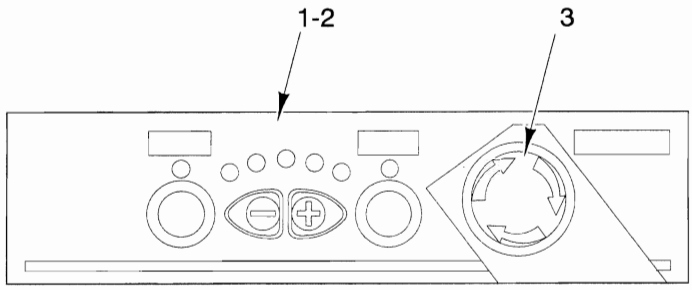

PL-53352

KEYPAD UNIT

ILLUS. PL-53352	PART NO.	NAME OF PART	AMT.
1	00-873042	Board - Keypad	1
2	00-873075	Keypad - Membrane	1
3	00-873074	Switch - Stop Operator	1

© HOBART CORPORATION, 1999

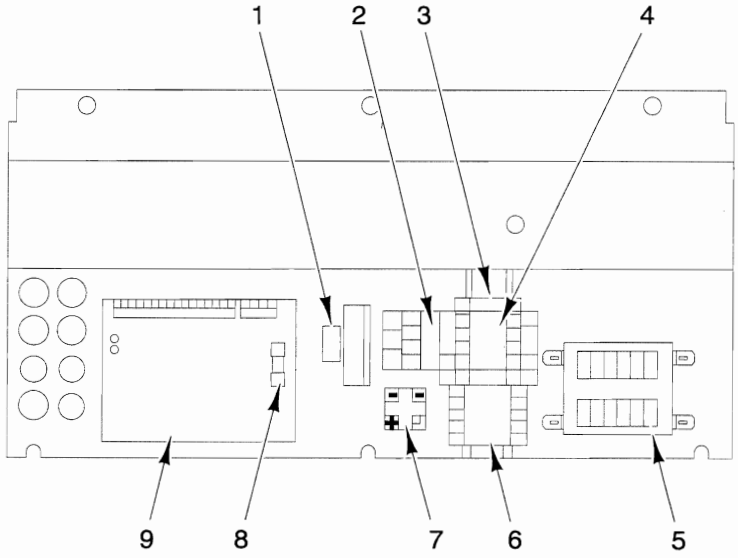

PL-53351

ELECTRICAL SUPPORT

ILLUS. PL-53351	PART NO.	NAME OF PART	AMT.
1	FE-024-94	Fuse 250 V., 4 A	1
2	00-088196-00031	Relay - Overload	1
3	00-873025	Block - Terminal	1
4	00-087713-100-2	Contactor	1
5	00-873039	Transformer	1
6	00-087713-089-4	Contactor 24 VAC	2
7	00-873040	Rectifier - Bridge	1
8	FE-025-84	Fuse - 250 V., 6.3 Amps.	1
9	00-873041	Board - Printed Circuit	1

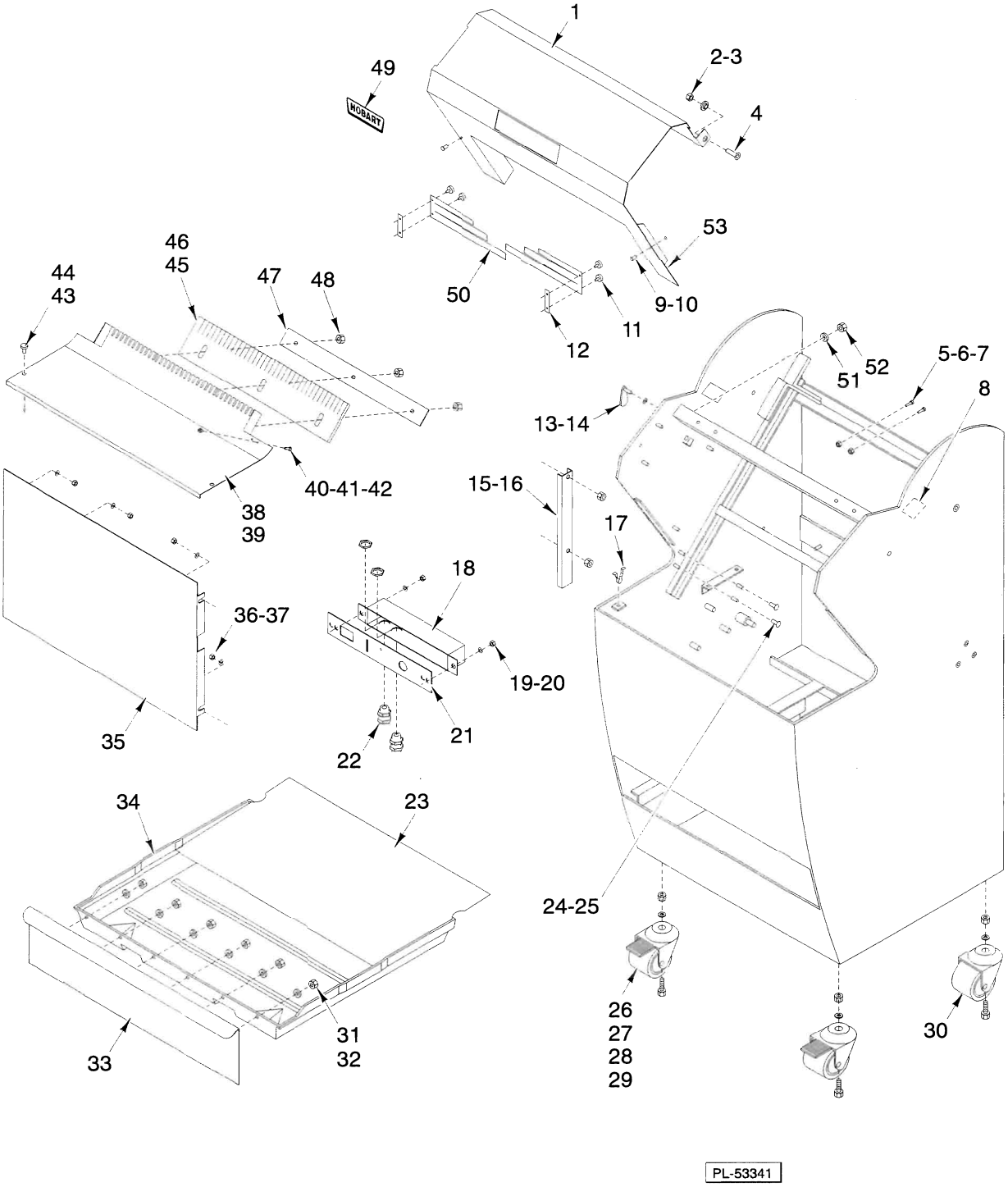

FRONT COVER UNIT

FRONT COVER UNIT

ILLUS. PL-53341	PART NO.	NAME OF PART	AMT.
1	00-479836-00001	Cover - (White)	1
2	00-479978	Bushing - Nylon	2
3	NS-048-48	Nut - Lock Special M8 Hex	2
4	SC-118-70	Cap Screw M8 x 20 mm Flat Hd.	2
5	SC-121-22	Mach. Screw M4 x 0.7 x 16mm Cheese Hd.	2
6	NS-048-46	Nut - Lock Special M4 Hex	2
7	00-873028	Switch - Reed	1
8	00-873049	Switch - Electric Eye	1
9	00-873066-00001	Screw - Knurled Thumb	2
10	00-873037-00002	Washer - Starlock	2
11	00-873021-00003	Screw - Knurled Thumb M4 x 10 mm	4
12	00-873033	Bracket - Flap	2
13	00-873262	Plate - Axle	1
14	00-873055	Washer - Nylon	1
15	00-479918	Channel - Wiring	1
16	NS-048-47	Nut - Lock Special M6 Hex	2
17	00-873143	Receptacle - Clip	2
18	00-479914	Box - Tactile Switch	1
19	NS-048-47	Nut - Lock Special M6 Hex	2
20	WS-030-32	Washer 6.4mm x 12.5mm x 1.5mm	2
21	00-479915	Support - Box	1
22	FE-024-10	Strain Relief	2
23	00-479850	Panel - Drawer	1
24	00-873263	Tube - 6 x 9 x 25	4
25	SC-118-25	Mach. Screw M4 x 6mm Pan Hd.	4
26	NS-048-49	Nut - Lock M10 Special Hex	4
27	WS-030-46	Washer 10.5 x 22	4
28	00-479887	Caster - W/Brake	2
29	SC-124-61	Cap Screw M10 x 1.50 x 40mm Hex Hd.	4
30	00-479927	Caster - W/O Brake	2
31	NS-047-34	Nut - Crown M6 x 1 SST.	6
32	WS-030-43	Washer 6.4 mm	6
33	00-479912-00001	Drawer - Face (White)	1
34	00-479969	Drawer - Tray	1
35	00-479906	Panel - Interior	1
36	NS-048-47	Nut - Lock Special M6 Hex	4
37	WS-030-32	Washer 6.4mm x 12.5mm x 1.5mm	4
38	00-479866-00001	Table - Front (½")	1
39	00-479866-00002	Table - Front (⅜")	1
40	SC-118-26	Mach. Screw M4 x 10mm Flat Hd.	2
41	NS-048-46	Nut - Lock Special M4 Hex	2
42	00-873053	Magnet	1
43	00-873259-00002	Grip - "T"	2
44	00-873142	Stud	2
45	00-479845-00001	Guide - Front Table (½")	1
46	00-479845-00002	Guide - Front Table (⅜")	1
47	00-479926	Guide - Table	1
48	NS-048-47	Nut - Lock Special M6 Hex	3
49	00-873065	Logo - Hobart	1
50	00-479901	Flap - Lateral	2
51	WS-030-32	Washer 6.4mm x 12.5mm x 1.5mm	2
52	NS-048-47	Nut - Lock Special M6 Hex	2
53	00-873028	Switch - Reed	1

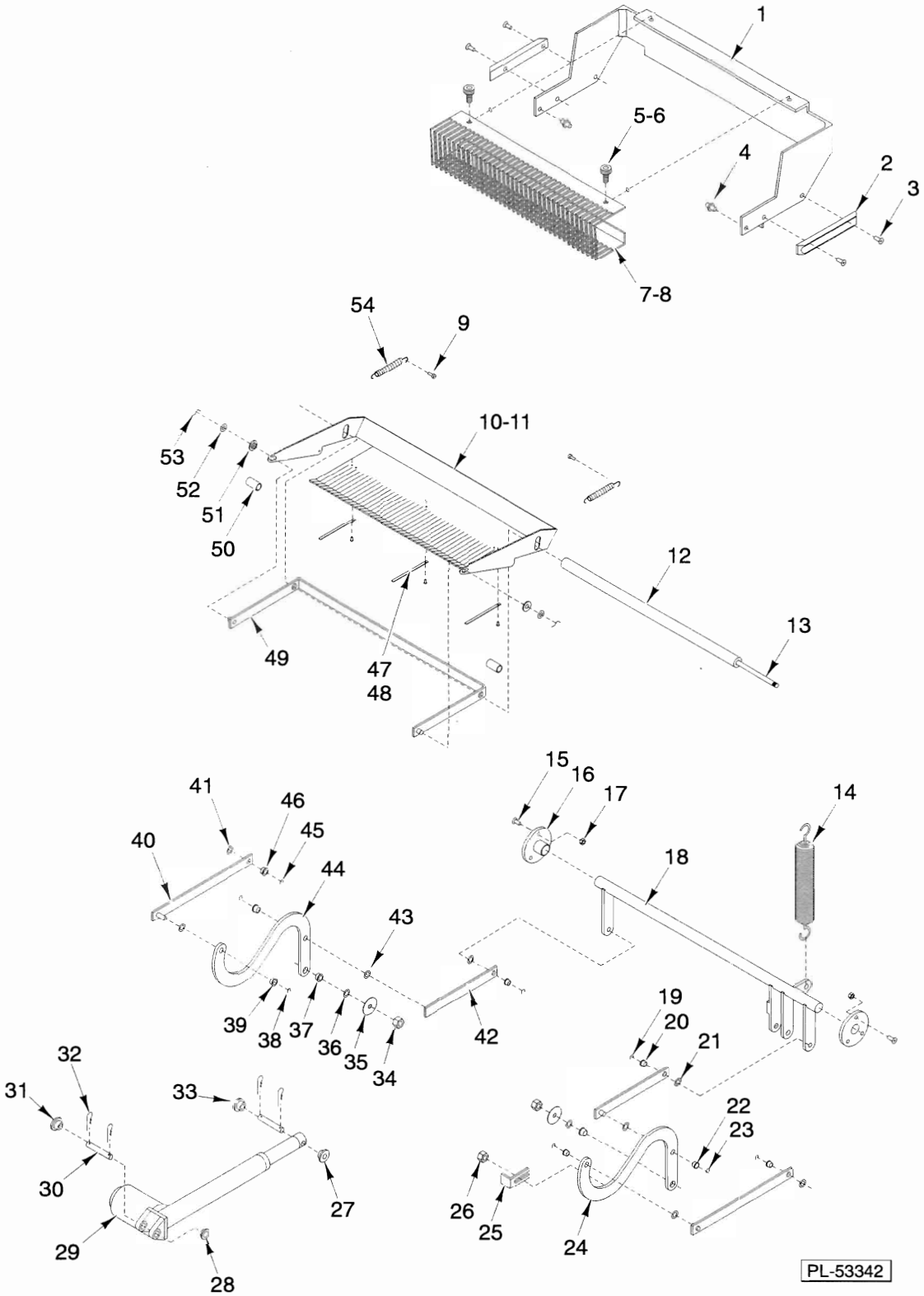
1
5-6
4
2
3
7-8
54
9
10-11
53
52
51
50
12
13
49
47
48
15
16
17
14
41
46
45
40
44
18
43
39
38
37
36
35
34
42
19
20
21
32
31
33
22
23
30
27
26
25
24
29
28
PL-53342

PUSHER UNIT

PUSHER UNIT

ILLUS. PL-53342	PART NO.	NAME OF PART	AMT.
1	00-479900	Pusher - Carriage	1
2	00-479844	Guide - Carriage	2
3	SC-124-63	Mach. Screw M6 x 16 mm Flat Hd.	4
4	00-479977	Pin - Coupling	2
5	00-873021-00002	Screw - Knurled Thumb M8 x 12 mm	2
6	RR-012-08	Retaining - Ring Din 471	2
7	00-479829-00001	Pusher - Bread (½" Slice Thickness)	1
8	00-479829-00002	Pusher - Bread (⅜" Slice Thickness)	1
9	SC-118-25	Mach. Screw M4 x 6mm Pan Hd.	2
10	00-479864-00001	Plate - Pressing (½")	1
11	00-479864-00002	Plate - Pressing (⅜")	1
12	00-479852	Pipe - Pressing Plate	1
13	00-479919	Axle - Pressing Plate	1
14	00-873023	Spring - Soft Traction	1
15	SC-124-63	Mach. Screw M6 x 16 mm Flat Hd.	6
16	00-479973	Axle - Bearing	2
17	NS-048-47	Nut - Lock Special M6 Hex	6
18	00-479897	Axle - Pulling Assy.	1
19	RR-011-88	Retaining Ring Series 8	2
20	00-479892-00003	Bushing 8 x 6	2
21	SL-005-09	Spring - Loading	2
22	00-479892-00002	Bushing M8 x 15 mm	2
23	RR-011-88	Retaining Ring Series 8	2
24	00-873079	Lever - S Actuator	1
25	00-479891	Lever - Motor Switch	1
26	NS-048-47	Nut - Lock Special M6 Hex	1
27	00-873032	Bushing	1
28	00-479892-00006	Bushing 12 x 7	1
29	00-873043	Actuator - SKF	1
30	00-873076	Axle - Actuator	2
31	00-479892-00006	Bushing 12 x 7	1
32	00-873077	Pin - Actuator Axle	4
33	00-873032	Bushing	1
34	NS-048-48	Nut - Lock Special M8 Hex	2
35	WS-030-66	Washer 8.4 mm.	2
36	SL-005-13	Spring - Loading Din 137A	2
37	00-479892-00005	Bushing 10 x 7	2
38	RR-011-88	Retaining Ring Series 8	2
39	00-479892-00003	Bushing 8 x 6	2
40	00-873081	Link - Long	2
41	SL-005-09	Spring - Loading	4
42	00-873080	Link - Short	2
43	SL-005-09	Spring - Loading	2
44	00-873078	Lever - S Flywheel	1
45	RR-011-88	Retaining Ring Series 8	2
46	00-479892-00002	Bushing M8 x 15 mm	2
47	00-479985	Guide - Comb	3
48	RS-032-99	Rivet - Pop	3
49	00-479920	Bar - Articulation	1
50	00-873035	Stop - Rubber	2
51	00-479892-00001	Bushing 8 x 2	2
52	SL-005-09	Spring - Loading	2
53	RR-011-88	Retaining Ring Series 8	2
54	00-479998	Spring - Pressing Plate	2

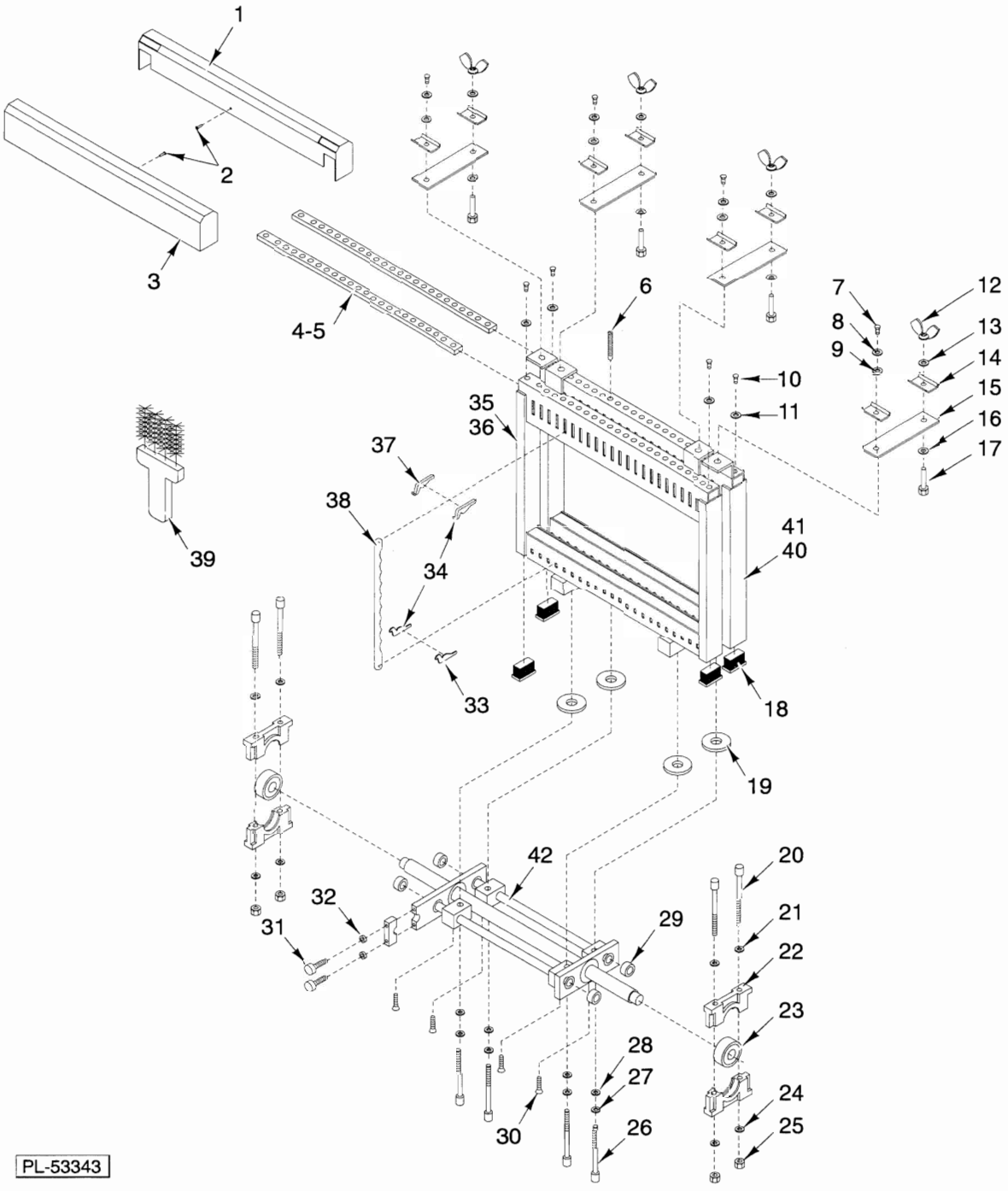
1
2
3
4-5
6
7
8
9
10
11
12
13
14
15
16
17
18
19
20
21
22
23
24
25
26
27
28
29
30
31
32
33
34
35
36
37
38
39
40
41
42
PL-53343

FRAME UNIT

FRAME UNIT

ILLUS. PL-53343	PART NO.	NAME OF PART	AMT.
1	00-873052	Cover - Rear Frame	1
2	SC-121-22	Mach. Screw M4 x 0.7 x 16mm Cheese Hd.	2
3	00-479847	Cover - Front Frame	1
4	00-479835-00001	Plate - Threaded (½" Slice Thickness)	2
5	00-479835-00002	Plate - Threaded (⅜" Slice Thickness)	2
6	SC-124-65	Set Screw M8 x 50 mm Hdls., Flat Pt.	AR
7	SC-121-15	Cap Screw M8 x 16mm Hex Hd.	4
8	WL-019-74	Lockwasher 8.2mm Medium	4
9	WS-030-44	Washer 8.4 x 16	4
10	SC-121-15	Cap Screw M8 x 16mm Hex Hd.	4
11	WL-019-74	Lockwasher 8.2mm Medium	4
12	NS-048-53	Nut - Wing M8	4
13	WL-019-74	Lockwasher 8.2mm Medium	4
14	00-479837	Frame - Linkage Fastener	8
15	00-479975	Frame - Linkage 140MM	4
16	WS-030-44	Washer 8.4 x 16	4
17	SC-118-25	Mach. Screw M4 x 6mm Pan Hd.	4
18	00-479931	Cap - Frame	4
19	00-479979	Washer (Set)	1
20	SC-119-25	Cap - Screw M8 x 100 mm Hex Hd.	4
21	WS-030-44	Washer 8.4 x 16	4
22	00-479974	Bushing - Shaft Half	4
23	BB-005-46	Ball Bearing - Fafnir 204KDDFS50545	2
24	WS-030-44	Washer 8.4 x 16	4
25	NS-048-48	Nut - Lock Special M8 Hex	4
26	SC-124-62	Cap Screw M10 x 60 mm Soc. Hd.	4
27	WL-019-89	Lockwasher M10	4
28	WS-030-46	Washer 10.5 x 22	4
29	BB-005-19	Ball Bearing - Fafnir #H202PP	4
30	SC-118-68	Cap Screw M6 x 20mm Soc. Fil. Hd.	4
31	SC-121-87	Cap Screw M8 x 40mm Hex Hd.	2
32	WL-019-74	Lockwasher 8.2mm Medium	2
33	00-479825-00002	Holder - Knife (Left)	AR
34	00-479825-00001	Holder - Knife (Right)	AR
35	00-873070-00001	Frame - Front (½" Slice Thickness)	1
36	00-873070-00002	Frame - Front (⅜" Slice Thickness)	1
37	00-479825-00002	Holder - Knife (Left)	AR
38	00-479824	Knife 10 mm	AR
39	00-873013	Brush - Cleaning	1
40	00-873071-00001	Frame - Rear (½")	1
41	00-873071-00002	Frame - Rear (⅜")	1
42	00-479831	Axle - Oscillating Assy. (Incls. Item 29)	1

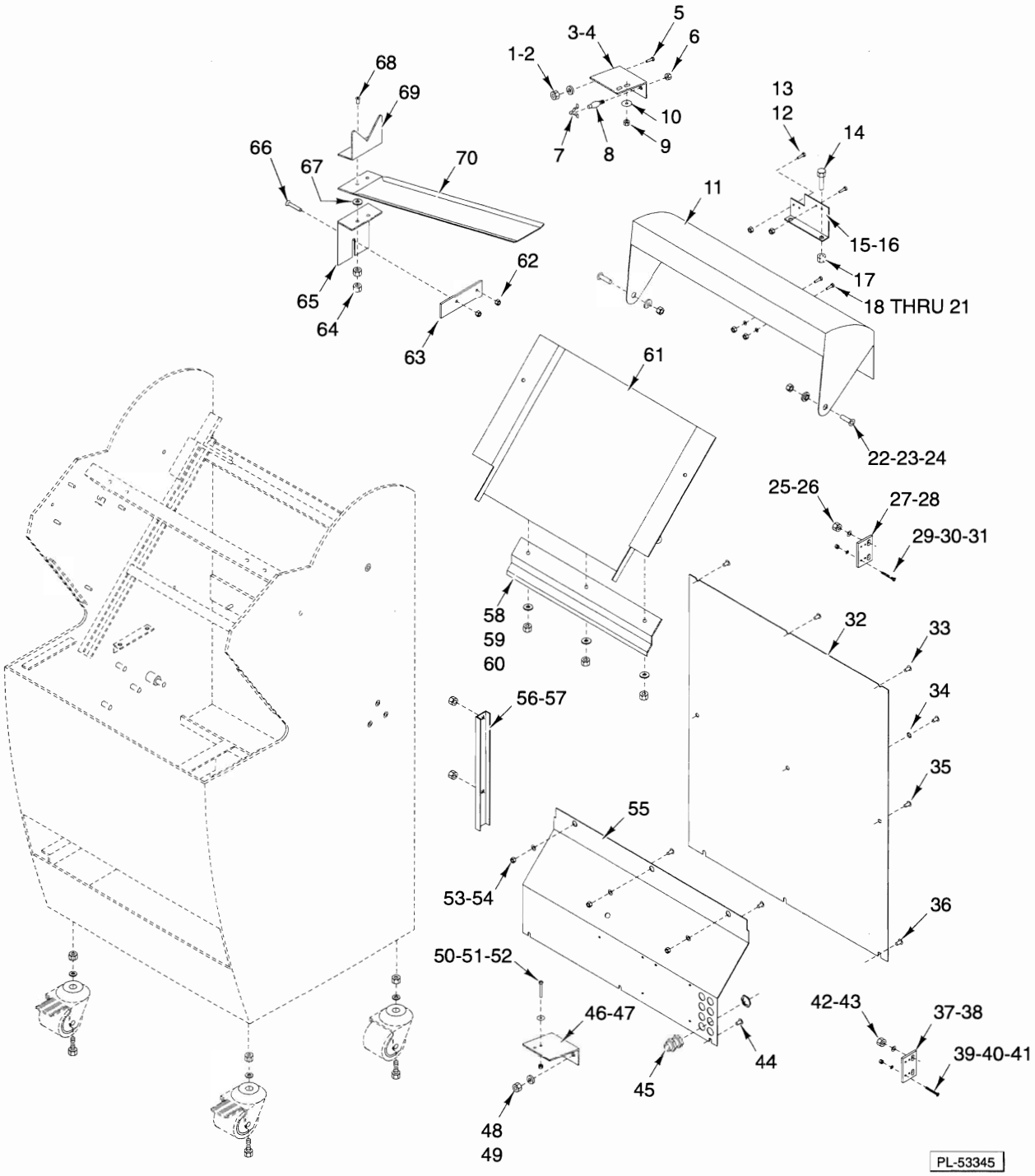

REAR COVER & TABLE

ILLUS. PL-53345	PART NO.	NAME OF PART	AMT.
1	NS-048-46	Nut - Lock Special M4 Hex	2
2	WS-030-51	Washer 4.3mm x 12mm x 1.0mm	2
3	00-873264	Plate - Fastening	1
4	00-873053	Magnet	1
5	SC-120-61	Mach. Screw M4 x 07 x 10mm Cheese Hd.	2
6	NS-047-34	Nut - Crown M6 x 1 SST.	1

REAR COVER & TABLE (CON'T)

ILLUS. PL-53345	PART NO.	NAME OF PART	AMT.
7	00-873143	Receptacle - Clip	1
8	00-873142-00002	Stud	1
9	NS-048-47	Nut - Lock Special M6 Hex	2
10	WS-030-32	Washer 6.4mm x 12.5mm x 1.5mm	2
11	00-479907-00001	Cover - Rear (White)	1
12	SC-120-61	Mach. Screw M4 x 07 x 10mm Cheese Hd.	2
13	NS-048-46	Nut - Lock Special M4 Hex	2
14	SC-118-54	Cap Screw Met M6 x 1.0 x 16mm Hex Hd.	2
15	00-873082	Plate - Mounting	1
16	00-873028	Switch - Reed	1
17	NS-048-47	Nut - Lock Special M6 Hex	2
18	SC-120-61	Mach. Screw M4 x 07 x 10mm Cheese Hd.	2
19	WS-030-51	Washer 4.3mm x 12mm x 1.0mm	2
20	NS-048-46	Nut - Lock Special M4 Hex	2
21	00-873053	Magnet	1
22	SC-118-70	Cap Screw M8 x 20 mm Flat Hd.	2
23	NS-048-48	Nut - Lock Special M8 Hex	2
24	00-479978	Bushing - Nylon	2
25	NS-048-47	Nut - Lock Special M6 Hex	2
26	WS-030-32	Washer 6.4mm x 12.5mm x 1.5mm	2
27	00-479928	Plate - Adapter	1
28	00-087711-00315	Switch - Limit (Home)	1
29	SC-118-39	Mach. Screw M4 x 30 mm Flat Hd.	2
30	WS-030-51	Washer 4.3mm x 12mm x 1.0mm	2
31	NS-048-46	Nut - Lock Special M4 Hex	2
32	00-479856-00001	Cover - Electrical	1
33	00-873021-00001	Screw - Knurled Thumb M6 x 10	3
34	WL-019-57	Lockwasher M6 External Shakeproof	1
35	SC-118-54	Cap Screw Met M6 x 1.0 x 16mm Hex Hd.	3
36	SC-118-54	Cap Screw Met M6 x 1.0 x 16mm Hex Hd.	3
37	00-479928	Plate - Adapter	1
38	00-087711-00313	Switch - Limit (Front)	1
39	SC-118-39	Mach. Screw M4 x 30 mm Flat Hd.	2
40	WS-030-51	Washer 4.3mm x 12mm x 1.0mm	2
41	NS-048-46	Nut - Lock Special M4 Hex	2
42	NS-048-47	Nut - Lock Special M6 Hex	2
43	WS-030-32	Washer 6.4mm x 12.5mm x 1.5mm	2
44	SC-117-48	Mach. Screw M6 x 12 mm Pan Hd.	6
45	FE-024-10	Strain Relief	8
46	00-873015	Bracket - Drawer Switch	1
47	00-087711-00314	Switch - Limit (Drawer)	1
48	NS-048-47	Nut - Lock Special M6 Hex	2
49	WS-030-32	Washer 6.4mm x 12.5mm x 1.5mm	2
50	SC-121-81	Mach. Screw M4 x 40mm Phil. Cheese Hd.	2
51	WS-030-51	Washer 4.3mm x 12mm x 1.0mm	2
52	NS-048-46	Nut - Lock Special M4 Hex	2
53	WS-030-43	Washer 6.4 mm	3
54	NS-048-47	Nut - Lock Special M6 Hex	3
55	00-873018	Support - Electrical	1
56	00-479918	Channel - Wiring	1
57	NS-048-47	Nut - Lock Special M6 Hex	2
58	00-479932	Plate - Rear Table	1
59	WS-030-43	Washer 6.4 mm	2
60	NS-048-47	Nut - Lock Special M6 Hex	2
61	00-479876	Table - Non-Indented	1
62	NS-048-47	Nut - Lock Special M6 Hex	2
63	00-479970	Bracket - Bag Spade	1
64	NS-048-47	Nut - Lock Special M6 Hex	2
65	00-479869	Support - Bag Spade	1
66	00-873030	Knob	1
67	00-873055	Washer - Nylon	2
68	SC-117-48	Mach. Screw M6 x 12 mm Pan Hd.	2
69	00-479842	Stop - Adjustable	1
70	00-479874	Spade - Bag	1

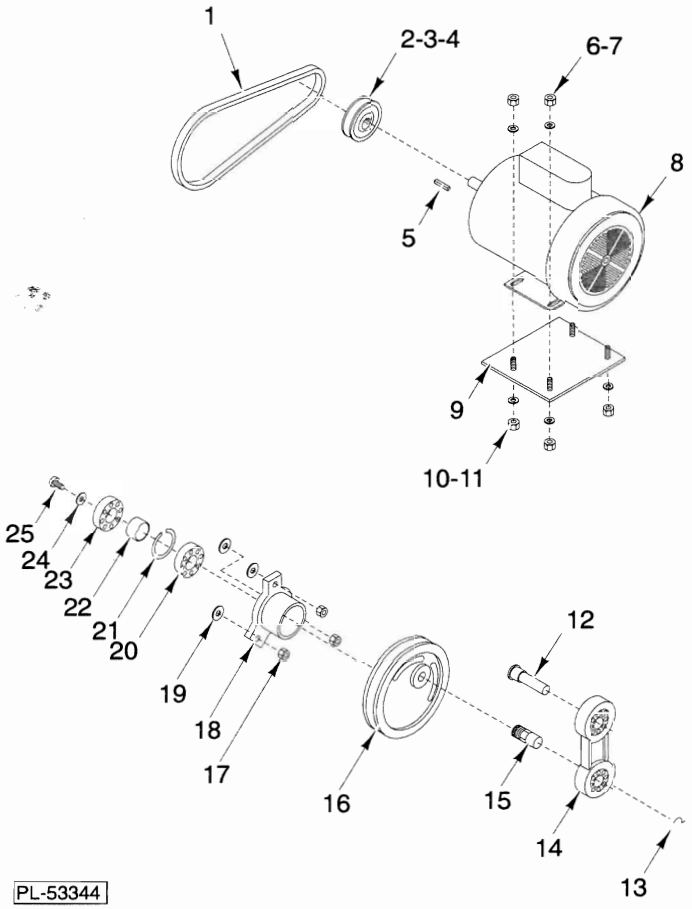

DRIVE UNIT

ILLUS. PL-53344	PART NO.	NAME OF PART	AMT.
1	BV-013-36	"V" - Belt	1
2	00-479930	Pulley A-56	1
3	SC-117-33	Set Screw M8 x 1.25 x 12mm Hdls. Cup Pt.	1
4	SC-117-35	Set Screw M6 x 1.0 x 10 mm Hdls., Cup Pt.	1
5	00-873051	Key - Motor Shaft	1
6	WS-030-44	Washer 8.4 x 16	4
7	NS-048-48	Nut - Lock Special M8 Hex	4
8	00-479929	Motor (Incls. Item 5)	1
9	00-873014	Support - Motor	1
10	WS-030-66	Washer 8.4 mm.	4
11	NS-048-48	Nut - Lock Special M8 Hex	4
12	00-479840	Pin - Swiveling	1
13	RR-012-06	Retaining Ring Din 471	1
14	00-479885	Rod - Connecting	1
15	00-479840	Pin - Swiveling (Axle)	1
16	00-479839	Flywheel - Groove A	1
17	NS-048-49	Nut - Lock M10 Special Hex	3
18	00-479838	Axle - Flywheel Box	1
19	00-873064	Washer M10 Dia.	3
20	BB-017-39	Ball Bearing - MRC 205 SZZ-01-ST-A-92-C	1
21	RR-012-07	Retaining Ring Met Din 472	1
22	00-479884	Spacer - Axle Box	1
23	BB-017-39	Ball Bearing - MRC 205 SZZ-01-ST-A-92-C	1
24	WS-030-66	Washer 8.4 mm.	1
25	SC-121-15	Cap Screw M8 x 16mm Hex Hd.	1