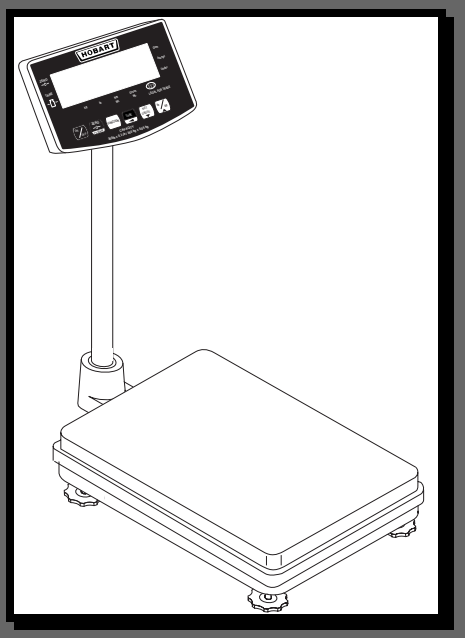

HBR300
Bench Receiving Scale
Instruction Manual

Model
ML-29116

HOBART CORPORATION
701 S. RIDGE AVENUE
TROY, OHIO 45374

F-34220 Rev. A (2/99)

Table of Contents

INTRODUCTION **1**
FCC Note 1
Verify Correctness of Weight 1
Installation and Setup by An Authorized Hobart Technician 2
Manual Overview 2

USING THE SCALE **3**
Supplying Power to the Scale 4
Leveling the Scale 5
Adjusting the Display Head for Easy Viewing 5

DISPLAY HEAD **6**
Display 6
Keypad 7
Operator Mode 7
Setup Mode 8

OPERATING THE SCALE **9**
Operating in Setup Mode 9
Presetting Tare 9
Clearing a Preset Tare 11
Setting Upper and Lower Weight Limits 11
Clearing Upper and Lower Weight Limits 13
Operating in Operator Mode 14
Weighing a Product Using One-Touch Tare 14
Weighing a Product When Preset Tare Is Set 14
Weighing a Product When Upper and Lower Weight Limits Are Set 14
Weighing in Batches 15

CLEANING AND MAINTAINING THE SCALE **15**
Cleaning 15
Sanitizing 16
Maintaining 16

ERROR MESSAGES **17**

ACCESSORY (Mobile Cart) **18**

© Copyright Hobart Corporation 1999

Hobart Bench Receiving Scale (HBR300)

SAVE THESE INSTRUCTIONS

Introduction

The HBR300 Bench Receiving Scale features a digital display with a 6-button keypad which tilts to create the best viewing angle. The scale also has adjustable legs and a level indicator to insure proper weight balance is maintained.

You can operate the scale in four modes using the 6-button keypad on the display.

1. One-Touch Tare
2. Batch Weighing
3. Preset Tare
4. Upper and Lower Weight Limit

This is a digital display scale with a 20″ x 16″ stainless steel platter which holds a capacity of 300 lb. x 0.1 lb. / 150 kg x 0.05 kg.

FCC Note

This equipment has been tested and found to comply with the limits for a Class A digital device, pursuant to Part 15 of the FCC Rules. These limits are designed to provide reasonable protection against harmful interference when the equipment is operated in a commercial environment. This equipment generates, uses, and can radiate radio frequency energy and, if not installed and used in accordance with the instruction manual, may cause harmful interference to radio communications. Operation of this equipment in a residential area is likely to cause harmful interference; in which case, the user will be required to correct the interference at his own expense.

Verify Correctness of Weight

When calibrated and sealed by your local Weights and Measures official, this scale is Legal for Trade. The NTEP (National Type Evaluation Program) certificate of Conformance number is 99-003.

Installation and Setup by an Authorized Hobart Technician

Before using your scale for the first time, an Authorized Hobart Service Technician must install and set up your scale. This includes:

- Mounting the display and display pole to the platform.
- Setting an automatic shut off time as an energy saver to extend battery life.
- Calibrating your scale.

Manual Overview

The following special instructions are used in the manual:

Note

A note is information that you need to know, but it is not an actual step in the procedures.

Tip

A tip is additional information that may be useful when you are using the system.

Look At This

Look At This is information to alert you that you may be doing something that will permanently alter your system.

Using the Scale

When you are ready to use you scale do the following:

- Supply power to your scale either by battery (4 D-cell) or a wall-mounted adapter plug.
- Level the scale to maintain proper scale balance.
- Adjust the Display Head for easy viewing.

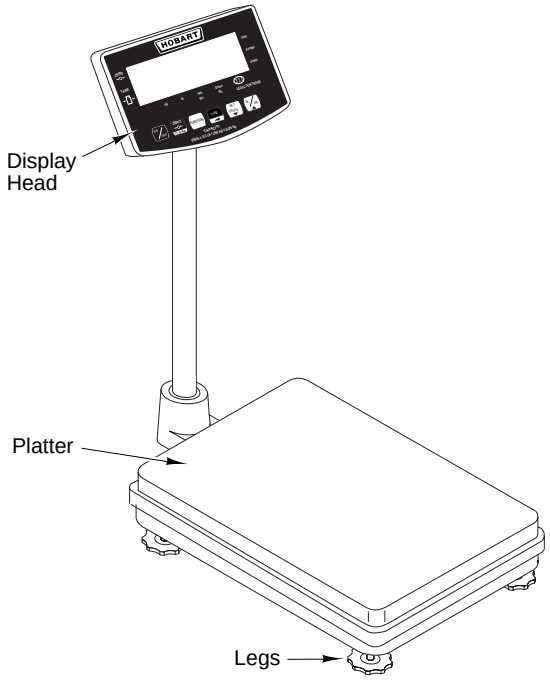

Guidelines for using your scale:

DO

- Set the scale in an area free of vibration.
- Set the scale on a firm, level surface.
- Operate in temperatures between -5°C and 40°C (23°F and 104°F).
- Use soap and water solution to clean the scale.
- Use four (4) D-cell batteries to power the scale.

DON'T

- Use solvents or abrasive materials to clean the scale.
- Place the scale in direct sunlight or direct wind (heating ducts, etc.).

Supplying Power to the Scale

Power can be supplied to the scale through the AC adapter or optional batteries. The scale uses four (4) D-cell batteries not supplied by Hobart.

To insert batteries:

1. Open the front cover of the display by pulling the tab (located on the back right side of the display) toward you.

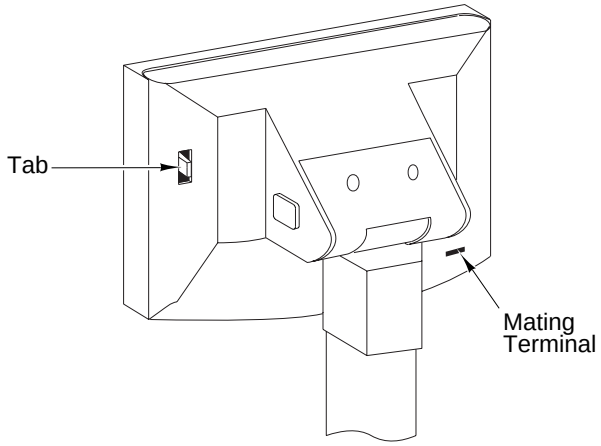

2. Insert batteries using the imprinted diagram inside the battery case located on the inside front cover of the display head.

To use the power supply:

1. Connect the wall-mount adapter plug to a 120 V, 60 Hz, 1 Ph electrical outlet.
2. Connect the small, round 12V DC connector to the Mating Terminal (located on the left lower back corner of the display head).

Note

When the scale is turned ON, all segments of the display flash approximately 5 times. Then, zero displays and the following indicators illuminate.

- Zero
- Stable
- kg -- OR -- lb
- Gross Wt.

Leveling the Scale

There are four (4) leveling legs underneath the scale platter. You may need to adjust these legs if the scale is not seated properly. Proper adjustment of these legs helps you to maintain the proper scale balance.

Level the scale by turning the leveling legs right or left until the bubble in the leveling indicator is centered.

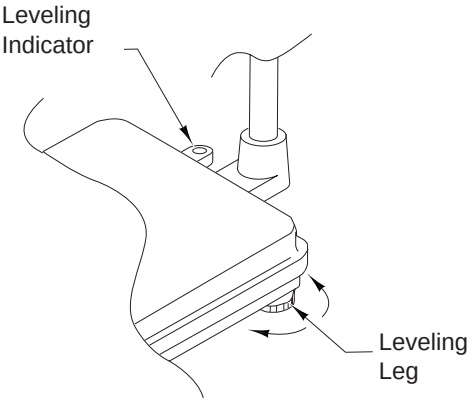

Adjusting the Display Head for Easy Viewing

To adjust display head:

1. Push and hold in button located on the back right side of the Display Head.
2. Move the Display Head up or down to your desired position.
3. Release button. Display Head will remain in set position.

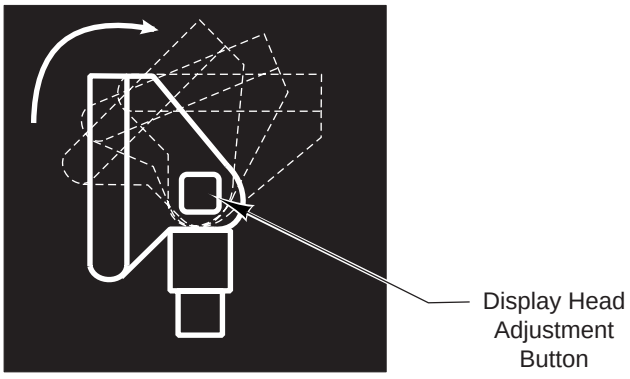

Display Head

The Display Head can be adjusted for easy viewing and includes the display, display indicators, and a 6-button keypad.

Display

Weight displays in lb (pounds) or kg (kilograms) and indicator arrows illuminate on the display.

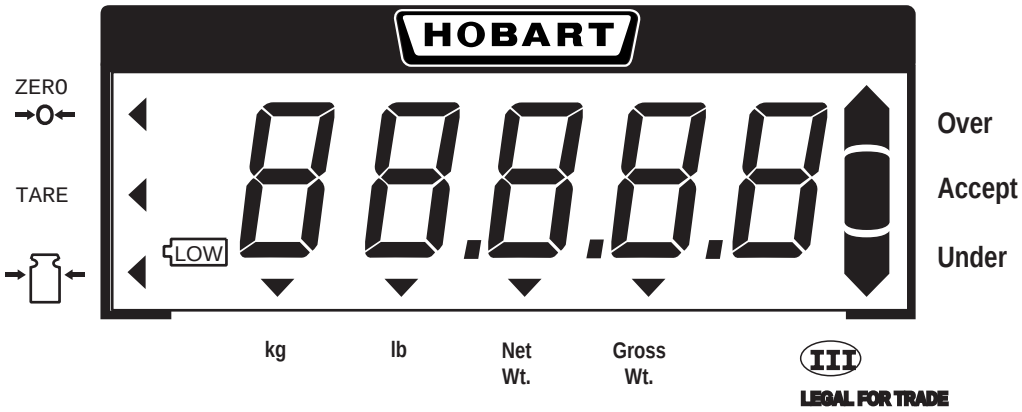

Indicator	Illuminated Arrow Indicates
ZERO →0←	No weight is on platter.
TARE	Tare value (weight of container) displays.
→⌷←	Stable Indicator. Scale is not in motion.
kg	Unit of weight displays in kilograms.
lb	Unit of weight displays in pounds.
Net Wt.	The weight of the product only (gross weight – tare) displays.
Gross Wt.	The total weight (product and container) displays.
Under	Weight is under the programmed lower limit setting.
Accept	Weight is within the range of the programmed weight limits.
Over	Weight is over the programmed upper limit setting.
LOW	Battery voltage is low.

Keypad

You can use the 6-button keypad to perform functions in two modes:

- Operator Mode
- Setup Mode

Operator Mode

In Operator Mode you can do the following using the keypad:

- Weigh products
- Operate one-touch tare
- Weigh items in batches
- Toggle between net and gross weight
- Toggle between kg and lb



KEYPAD

Key	Function
	Turns the scale on or off.
	Returns scale to zero when nothing is on the platter.
	Operates one-touch taring and batch weighing.
	Toggles between net and gross weight.
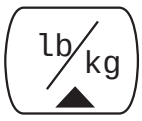	Toggles between pounds (lb) and kilograms (kg).

Setup Mode

Setup Mode is used to program the scale with specific settings before weighing the product.

In Setup Mode you can set, clear, or change:
- Preset tare
- Upper and lower weight limits



KEYPAD

Key	Function
	Turns the scale on or off.
	Clears values in upper and lower weight limit and preset tare modes.
	Used to enter and exit Setup Mode.
	Programs preset tare. ***-- OR --*** Allows you to move left to change each digit value in preset tare and weight limit modes.
	Decreases upper and lower weight limit values and preset tare values by one.
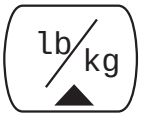	Increases upper and lower weight limit values and preset tare values by one.

Operating the Scale

Refer to the specific section for a further explanation of each step.

To operate the scale:

1. PRESS ON/OFF to turn the scale on.
2. Access Setup Mode to preset tare and set upper and lower limits if desired.
3. Access Operator Mode to operate one-touch tare, weigh products, and weigh items in batches. REFER to page 14.
4. Access Setup Mode to clear or change preset tare or upper and lower weight limits if desired.
5. PRESS ON/OFF to turn the scale off.

Tip

Upper and lower weight limits remain in memory unless batteries are removed or cord is unplugged.

Note

If at any time an incorrect weight displays, verify that your desired unit of weight (lb or kg) indicator is lit, PRESS lb/kg to change the unit of weight.

Operating in Setup Mode

Access Setup Mode to set, clear, or change preset tare and upper and lower weight limits.

Presetting Tare

Preset the tare if you know the package weight (tare value).

Note

If you want to preset tare but do not know the tare value, weigh the package or container. The weight displayed is the tare value. Follow the steps below to preset tare.

To preset tare:

1. HOLD DOWN FUNCTION and PRESS TARE. The tare indicator and last digit on the display flashes.

Note

When setting the tare value, only the flashing digit can be changed.

2. PRESS (lb/kg) to increase flashing digit by one.
   --OR--
   PRESS (NET GROSS) to decrease the flashing digit by one.
3. PRESS (TARE) to move left one digit. The digit to the left flashes and you can increase or decrease the digit value.
4. Repeat step 3 until your tare value is set.
5. PRESS (FUNCTION) to return to Operator Mode. Your preset tare value displays.



Empty 20 quart Mixer Bowl

EXAMPLE: Mixer Bowl
Tare = 8.7 lb

1. HOLD DOWN (FUNCTION) and PRESS (TARE).

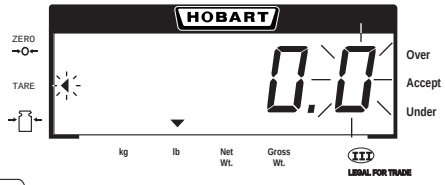

2. PRESS (NET GROSS) 3 times.

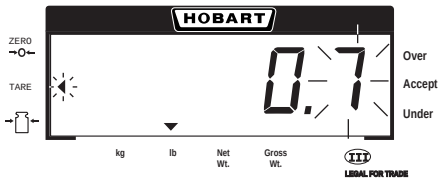

3. PRESS (TARE) 1 time, then PRESS (NET GROSS) 2 times.

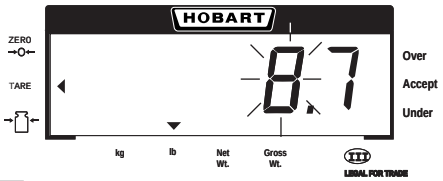

4. PRESS (FUNCTION).

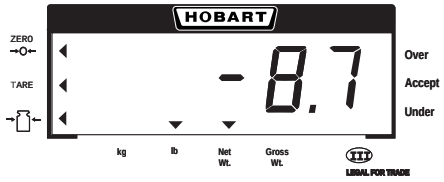

Clearing a Preset Tare

To clear a preset tare:

1. Remove product and container from scale platter. The preset tare weight displays.
2. HOLD DOWN FUNCTION and PRESS TARE. The tare indicator and last digit flashes.
3. PRESS ZERO CLEAR. The set tare value clears, 0.0 displays, and the tare indicator and last digit flashes.
4. PRESS FUNCTION to return to Operator Mode.

Setting Upper and Lower Weight Limits

If you want the product to weigh a certain amount, you can set upper and lower limits.

By setting the upper and lower limits you indicate the maximum and minimum amount that you want the product to weigh on the scale. The Over indicator flashes while in the upper limit setting mode. The Under indicator flashes while in the lower limit setting mode.

Tip

- If the upper limit is set to zero (0.0). The over/under mode will not work.
- If the upper limit is set to a smaller value than the lower limit, an error message (------E) displays. Refer to ***ERROR MESSAGES.***

To set weight limits:

1. PRESS FUNCTION to set the lower limit. The Under indicator and the last digit on the display flashes.

Note

To set the upper limit only, PRESS FUNCTION again now. The Over indicator and the last digit on the display flashes. Go to step 6.

Note

When setting the upper and lower limit values, only the flashing digit can be changed.

2. PRESS lb/kg to increase flashing digit by one.
   --OR--
   PRESS NET GROSS to decrease the flashing digit by one.
3. PRESS TARE to move left one digit. The digit to the left flashes and you can increase or decrease the digit value.
4. Repeat step 3 until your limit value is set.
5. PRESS FUNCTION. You are now in the upper limit setting mode. The Over indicator and the last digit on the display flashes.

Note

If you want to set the lower limit only, PRESS FUNCTION again now to access Operator Mode.

6. Set your upper limit. Repeat steps 2 thru 4.
7. PRESS FUNCTION to return to Operator Mode.

EXAMPLE: Lower Limit = 18.4
Upper Limit = 20.0

1. PRESS FUNCTION.

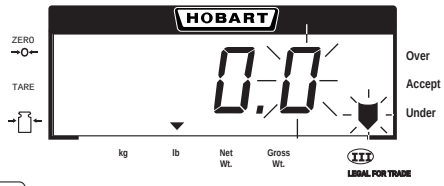

2. PRESS lb/kg 4 times.

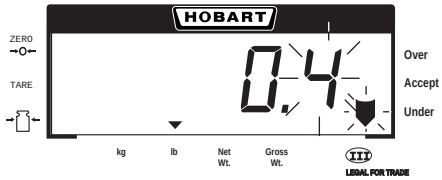

3. PRESS TARE 1 time, then PRESS NET GROSS 2 times.

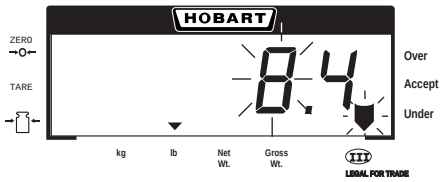

4. PRESS TARE 1 time, then PRESS lb/kg 1 time.

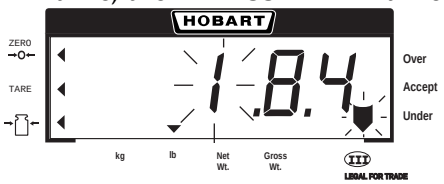

5. PRESS FUNCTION.

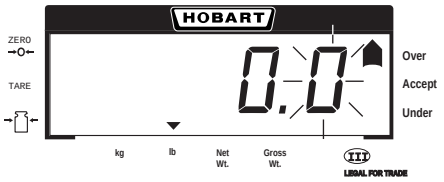

6. PRESS TARE 2 times, then PRESS lb/kg 2 times.

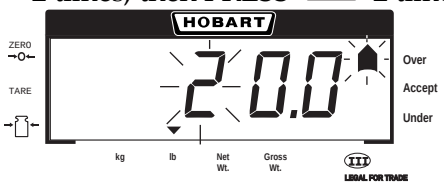

7. PRESS FUNCTION.

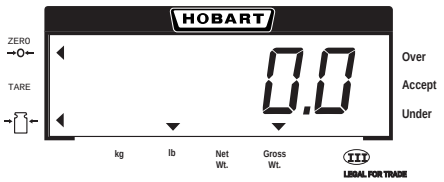

Clearing Upper and Lower Weight Limits

To clear weight limits:

1. PRESS FUNCTION. The preset lower limit displays, and the Under indicator and last digit flashes.
2. PRESS ZERO CLEAR to clear the lower limit. 0.0 displays, and the Under indicator and last digit flashes.
3. PRESS FUNCTION. The preset upper limit displays, and the Over indicator and last digit flashes.
4. PRESS ZERO CLEAR to clear the upper limit. 0.0 displays, and the Over indicator and last digit flashes.
5. PRESS FUNCTION to return to Operator Mode.

Operating in Operator Mode

Access Operator Mode to operate one-touch tare, weigh products, and weigh items in batches.

Weighing a Product Using One-Touch Tare

If you do not know the package weight (tare value), use one-touch tare.

To operate one-touch tare:
1. Place the container on the platter. The weight of the container displays.
2. PRESS TARE. The display changes to 0.0 and the tare indicator is lit.
3. Place the product in the container on the platter. The display will indicate the net weight.
4. Remove the container and the product from the platter. The negative weight of the container (tare) displays.
5. PRESS TARE. The weight display changes to 0.0, and the tare indicator no longer illuminates.

Weighing a Product When Preset Tare is Set

When weighing the product in Preset Tare Mode, the weight of the product (net weight) displays.

Once the tare is preset:
1. Place the container on the platter. 0.0 displays.
2. Place the product on the platter. The net weight displays.

Weighing a Product When Upper and Lower Weight Limits Are Set

When weighing a product in Upper and Lower Weight Limit Mode, the Over or Under indicator illuminates if the product weight is **over** or **under** your set weight limits. The Accept indicator illuminates if the weight is within the set weight limits.

Once the weight limits are set:
1. Place the product on the platter. The weight of the product displays, and the Over, Under, or Accept indicator illuminates.
2. If the Over indicator illuminates, remove some of your product until the Accept indicator illuminates.
3. If the Under indicator illuminates, add some of your product until the Accept indicator illuminates.

Weighing in Batches

Weighing in batches allows you to add ingredients and return the weight back to zero repeatedly by pressing Tare to control the weight of each added ingredient type.

To batch:
1. Place the container on the scale platter. The container weight displays.
2. PRESS TARE to make the display show 0.0.
3. Add the ingredient until the desired portion displays as the weight.
4. Repeat steps 2 and 3 for each ingredient you wish to add.
5. When done, remove the container filled with your ingredients from the scale platter. The total negative tare weight (container and ingredients) displays.
6. PRESS TARE to clear tare value.



Note

When weighing in batches, PRESS NET GROSS at any time to display the total weight of the items. Press again to return to the weight of the individual item.

Cleaning and Maintaining the Scale

Proper cleaning and maintenance prolongs the life and productivity of the scale. Clean the scale as needed.

Cleaning

To clean the scale:
1. Dampen a soft cloth with mild detergent and water solution.
2. Wipe down the scale housing and platter.



CAUTION — Look At This

DO NOT splash or hose down the scale. If water gets into the display it will blank out, or the weight will be unstable. Open the display and allow it to dry.

DO NOT use solvents to clean the scale.

Sanitizing

Do	Don't
DO use 5% Chlorine Bleach (5.25% Sodium Hypochlorite). Ratio Bleach Water Concentration 1 : 250 1 tsp. 1 gal. 200 ppm 1 : 500 1/2 tsp. 1 gal. 100 ppm 1 : 1000 1/4 tsp. 1 gal. 50 ppm 1 : 2000 1/8 tsp. 1 gal. 25 ppm	DON'T exceed chemical manufacturer's recommended concentrations for sanitizer. DON'T use solutions of greater than 200 ppm concentration of chlorine cleaners.

Note

FDA Code of Regulations Vol. 21 require solutions containing chlorine to be of no greater concentration than 200 ppm. Solutions containing concentrations greater than 200 ppm chlorine will accelerate corrosion of metals.

Note

Proper cleaning solvent is available from your local Hobart service office for all rubber surfaces. Observe the instructions on the bottle.

WARNING

BEFORE USING CLEANING SOLVENT, ALL FOOD PRODUCTS AND PACKAGING MATERIALS MUST BE REMOVED FROM THE AREA OR CAREFULLY PROTECTED. ALSO, ALL ODOR OF THE CLEANER MUST DISSIPATE BEFORE FOOD PRODUCTS OR PACKAGING MATERIALS ARE EXPOSED.

Maintaining

To maintain your scale follow these guidelines:

- Do not place the scale in direct sunlight or direct wind (heating ducts, etc.).
- Set the scale in an area free of vibration.
- Set the scale on a firm, level surface.
- Operate in temperatures between -5°C and 40°C (23°F and 104°F).
- Promptly remove expired batteries.

Error Messages

Error Message	Possible Cause	Action
----H	Item on platter is too heavy.	Remove the item and PRESS ZERO/CLEAR.
----L	Something is stuck between the upper and lower platter covers, or the upper platter cover has been removed.	Remove the item stuck between the covers or replace the upper platter cover.
--OF-	An item, which exceeds the scale capacity, is on the platter.	Remove the item.
--UF-	The platter cover is removed.	Replace the platter cover.
----E1	Upper limit is set to a smaller value than the lower limit.	Reset the limits.
LOW	Battery voltage is low.	Replace batteries. Refer to ***POWERING THE SCALE***.

Accessory (Mobile Cart)

An optional mobile cart with rear locking casters is available. Contact your local Hobart Representative for further details.

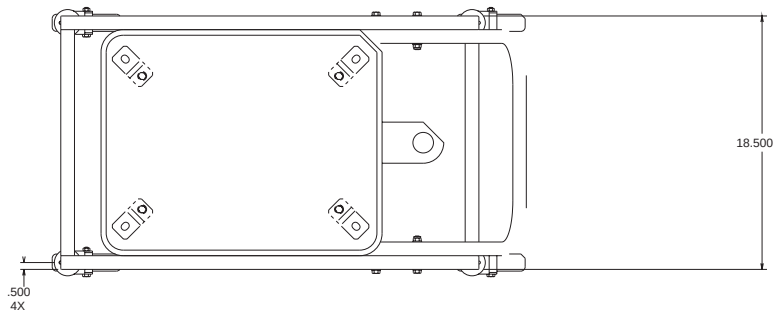

TOP VIEW

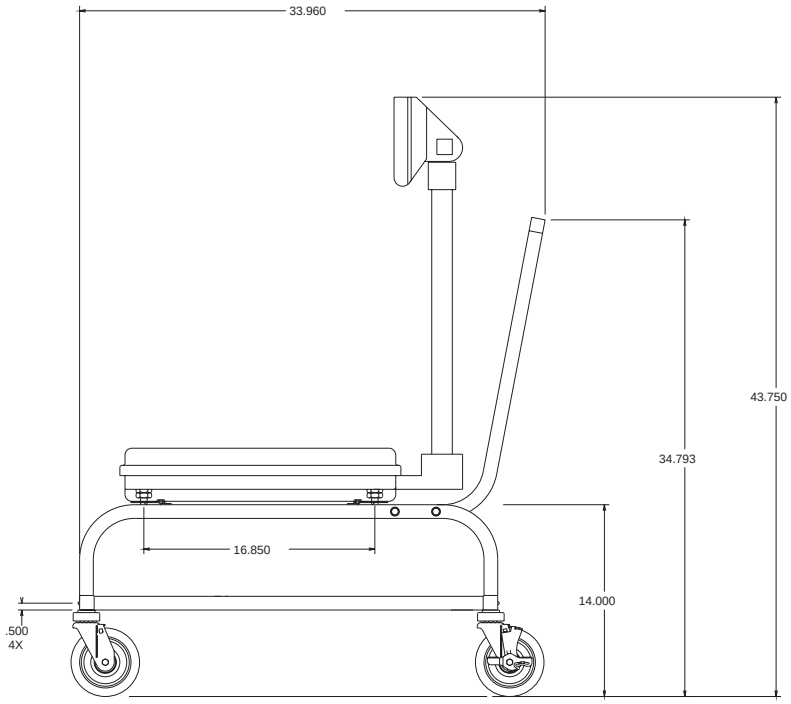

SIDE VIEW

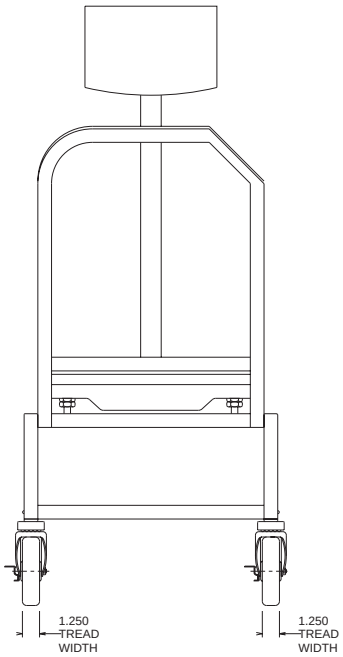

REAR VIEW