HOBART

CATALOG OF REPLACEMENT PARTS

HBR300 BENCH RECEIVING SCALE

HBR300 ML-29116



A product of HOBART CORPORATION 701 S. RIDGE AVENUE TROY, OHIO 45374-0001

FORM 34313 (5-99)

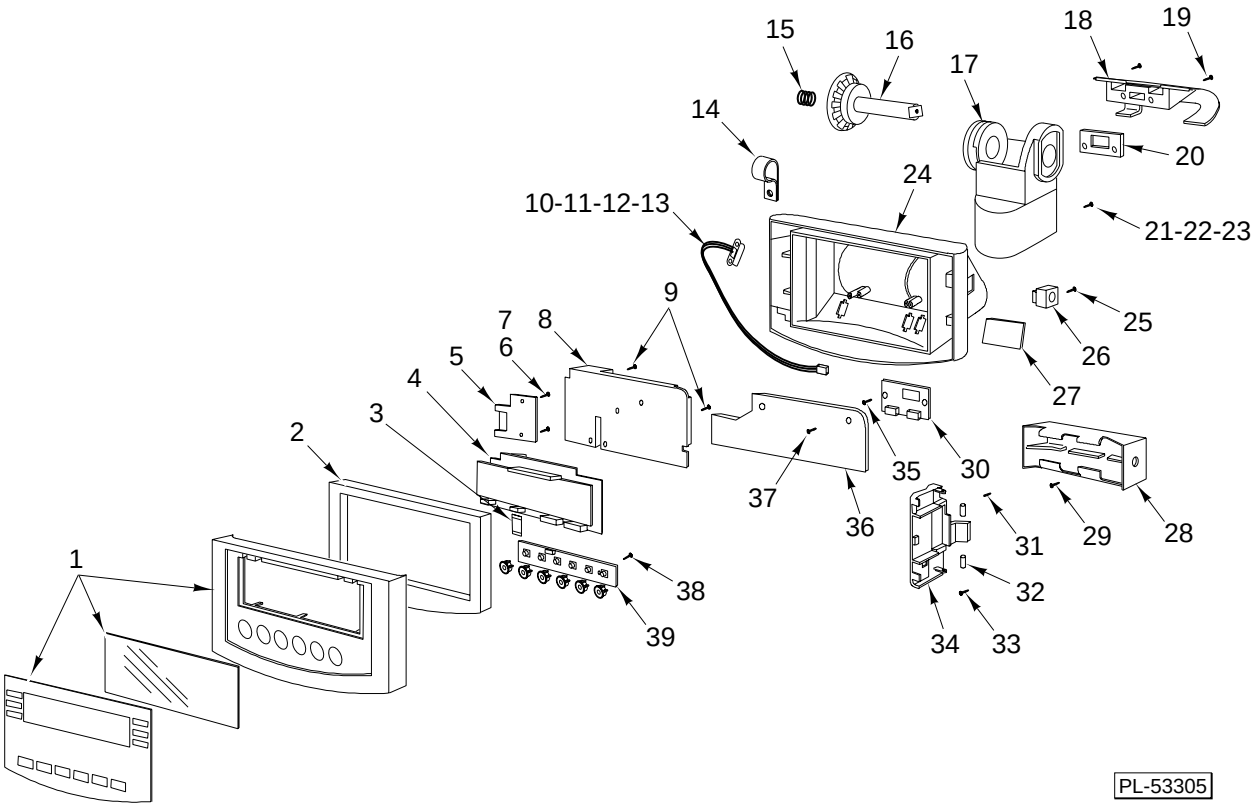

INDICATOR UNIT

© HOBART CORPORATION, 1999

INDICATOR UNIT

ILLUS. PL-53305	PART NO.	NAME OF PART	AMT.
1	00-049321	Housing - Assy. (Display)	1
2	00-049350	Gasket - Display Housing	1
3	00-049952	Cable Ribbon	1
4	00-049953	Logic Board Assy.	1
5	00-049954	A/D Board Assy.	1
6	SC-124-98	Mach. Screw M3 x 0.5 x 5mm Phil. Pan Hd.	2
7	WL-019-95	Lockwasher M3	2
8	00-049955	Cover - CPU Board	1
9	00-440140	Screw - Sealing	2
10	00-049962	Cable Assy. - A/C Adapter	1
11	SC-124-97	Mach. Screw M2.5 x 0.45 x 10mm Phil. Pan Hd.	2
12	WL-019-94	Lockwasher M2.5	2
13	NS-048-55	Nut - M2.5 x 0.45 Hex	2
14	00-030695	Clamp	2
15	00-049964	Spring - Angle Adjuster	1
16	00-049965	Adjuster - Angle	1
17	00-049966	Mount - Display Housing	1
18	00-049968	Cover - Column	1
19	SD-038-65	Self - Tapping Screw M4 x 16mm Phil. Pan Washer Hd.	2
20	00-049967	Gasket - Column Cover	1
21	SC-124-99	Mach. Screw M4 x 0.7 x 6mm Phil. Truss Hd.	1
22	WL-200-03	Lockwasher M4 SST	1
23	WS-030-51	Washer 4.3mm x 12mm x 1.0mm	1
24	00-049969	Housing - Rear	1
25	SD-038-64	Self - Tapping Screw M4 x 12mm Phil. Pan Washer Hd., Type BT	1
26	00-049961	Button Cover - Angle Adjuster	1
27	00-049960	Label - Capacity	1
28	00-049958	Housing - Battery	1
29	SD-038-62	Self - Tapping Screw M3 x 8mm Phil. Pan Washer Hd.	AR
30	00-049959	Power Board Assy.	1
31	SD-038-56	Self - Tapping Screw M3 x 10mm Phil. Pan Hd.	1
32	RP-006-28	Pin - Roll 5mm x 20mm x 1.0mm	2
33	SD-038-56	Self - Tapping Screw M3 x 10mm Phil. Pan Hd.	1
34	00-049957	Latch Assy. - Display	1
35	SD-038-61	Self - Tapping Screw M3 x 6mm Phil. Pan Hd., Type BT	2
36	00-049956	Cover - Power Board	1
37	WL-019-89	Lockwasher M10	2
38	SD-038-62	Self - Tapping Screw M3 x 8mm Phil. Pan Washer Hd.	2
39	00-049951	Keyboard Assy.	1

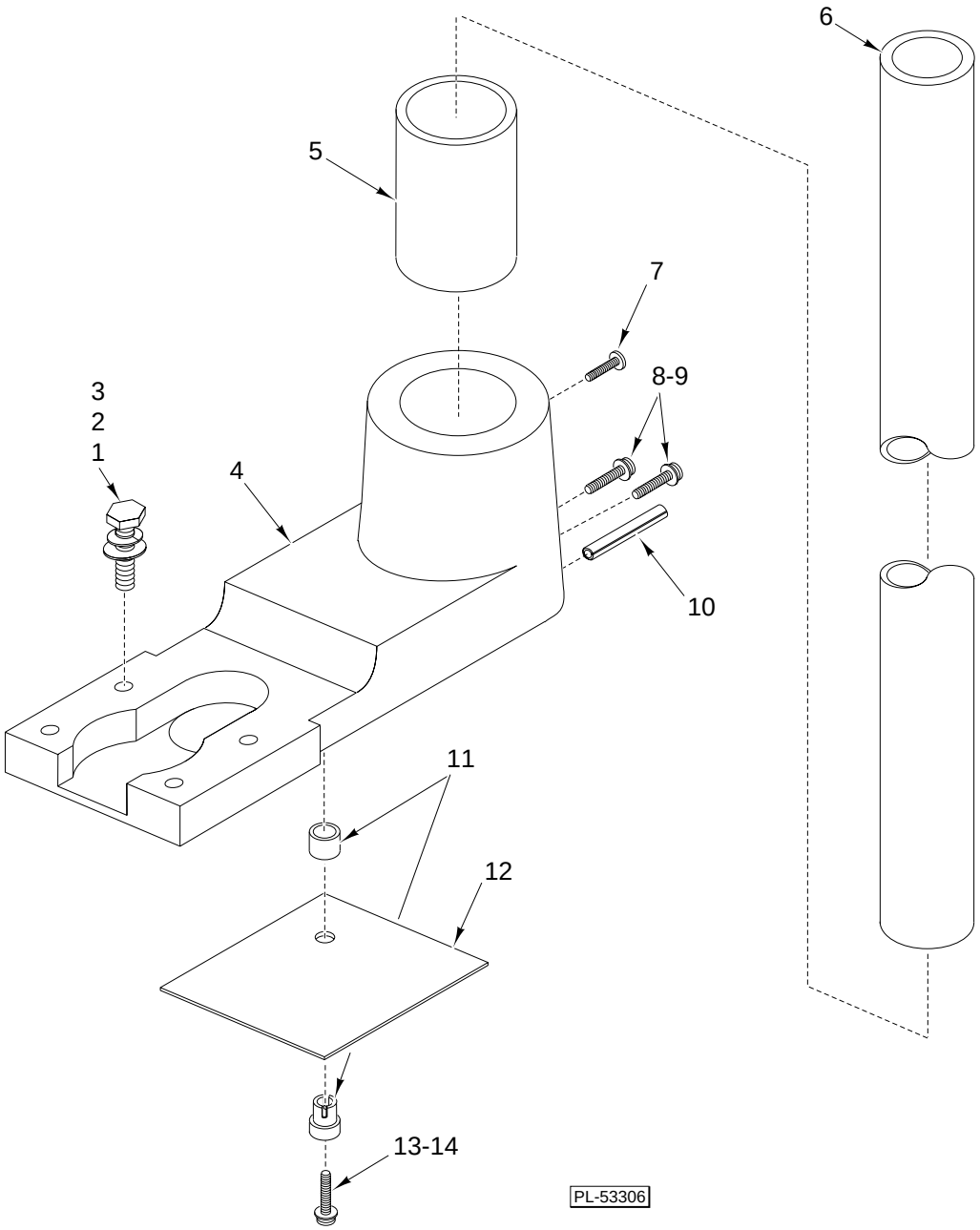

COLUMN UNIT

COLUMN UNIT

ILLUS. PL-53306	PART NO.	NAME OF PART	AMT.
1	SC-125-03	Mach. Screw M8 x 25 Hex Hd.	4
2	WL-019-74	Lockwasher 8.2mm Medium	4
3	WS-017-09	Washer .328 x .500 x .062	4
4	00-049946	Base - Collar	1
5	00-049945	Insert - Sleeve	1
6	00-049944	Column	1
7	SC-121-22	Mach. Screw M4 x 0.7 x 16mm Cheese Hd.	1
8	SC-123-30	Mach. Screw M4 x 0.7 x 20mm Phil. Pan Hd.	2
9	WL-200-03	Lockwasher M4 SST	2
10	RP-006-29	Pin - Roll M5 x 25mm	1
11	00-049947	Stand-Off - Cover Plate	1
12	00-049948	Plate - Cover	1
13	SC-123-30	Mach. Screw M4 x 0.7 x 20mm Phil. Pan Hd.	1
14	WL-200-03	Lockwasher M4 SST	1

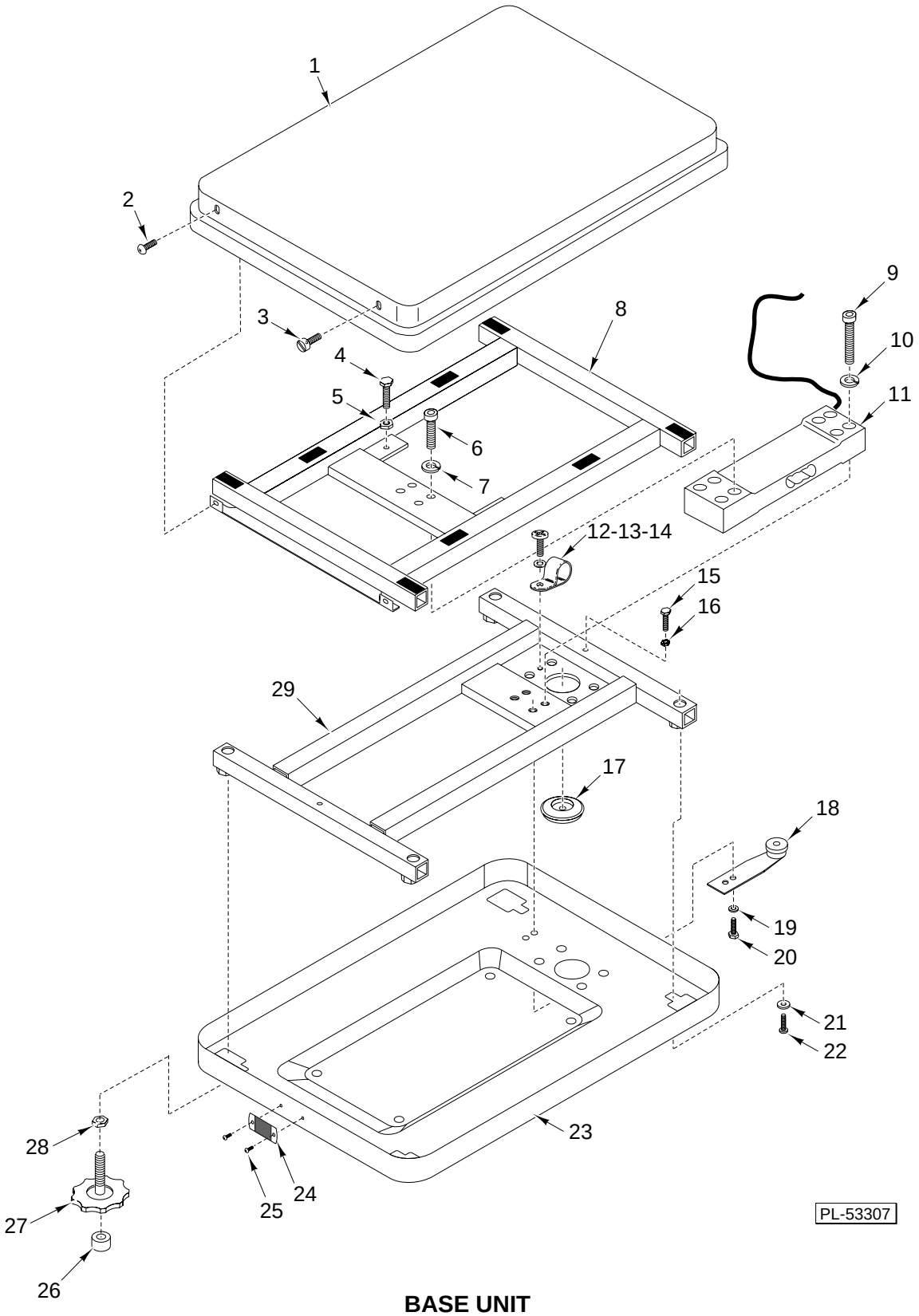
1
2
3
4
5
6
7
8
9
10
11
12-13-14
15
16
17
18
19
20
21
22
23
24
25
26
27
28
PL-53307

BASE UNIT

BASE UNIT

ILLUS. PL-53307	PART NO.	NAME OF PART	AMT.
1	00-049935	Platter	1
2	SC-122-37	Mach. Screw M4 x 0.7 x 10mm Phil. Pan Hd. SST	2
*3	SC-123-02	Mach. Screw M4 x 0.7 x 10mm Oval Hd.	2
4	SC-123-35	Mach. Screw M6 x 1.0 x 20mm Hex Hd.	2
5	NS-047-13	Nut - M6 x 1.0 Hex SST	2
6	SC-125-04	Cap Screw M10 x 1.50 x 25mm Soc. Hd.	4
7	WL-019-89	Lockwasher M10	4
8	00-049936	Spider - Upper	1
9	SC-125-05	Cap Screw M10 x 1.50 x 45mm Soc. Hd.	4
10	WL-019-89	Lockwasher M10	4
11	00-049937	Load Cell 105KG/300 LB.	1
12	SD-038-63	Mach. Screw M4 x 8mm Phil. Pan Washer Hd., Type BT	2
13	WL-200-03	Lockwasher M4 SST	1
14	00-030695	Clamp	1
15	SC-125-01	Self - Tapping Screw M4 x 0.7 x 20mm Hex	1
16	NS-200-03	Nut M4 x 0.7 Hex SST	2
17	00-049939	Grommet - Rubber	1
18	00-049940	Level Assy.	1
19	WS-030-50	Washer 4.3mm x 12 mm x 1.0mm	4
20	SC-125-02	Mach. Screw M5 x 0.5 x 12mm Hex Hd.	2
21	WS-030-51	Washer 4.3mm x 12mm x 1.0mm	4
22	SC-121-37	Mach. Screw 10-32 x ½ Button Hd (Tamper Resistant)	4
23	00-049941	Base - Scale	1
24	00-049322	Plate - Data (Blank)	1
25	SD-033-15	Self-Tapping Screw #0 x 3⁄16 Rd. Hd., Type U	2
26	00-049943	Cap - Leveling Leg	4
27	00-049942	Leg - Leveling	4
28	NS-047-54	Nut M12 x 1.75 Hex	4
29	00-049938	Spider - Lower	1

*Note: Use 440141 Sealing Screw M4 x 0.7 x 10mm Fil. Hd. For Service Only Where a Sealed Platter is Required.

— NOTES —