HOBART

CATALOG OF REPLACEMENT PARTS

HBR301
RECEIVING SCALE

ML-29240 (300 Lb.)
ML-29241 (60 Lb.)

A product of HOBART CORPORATION 701 S. RIDGE AVENUE TROY, OHIO 45374-0001

FORM 43085 (December 2003)

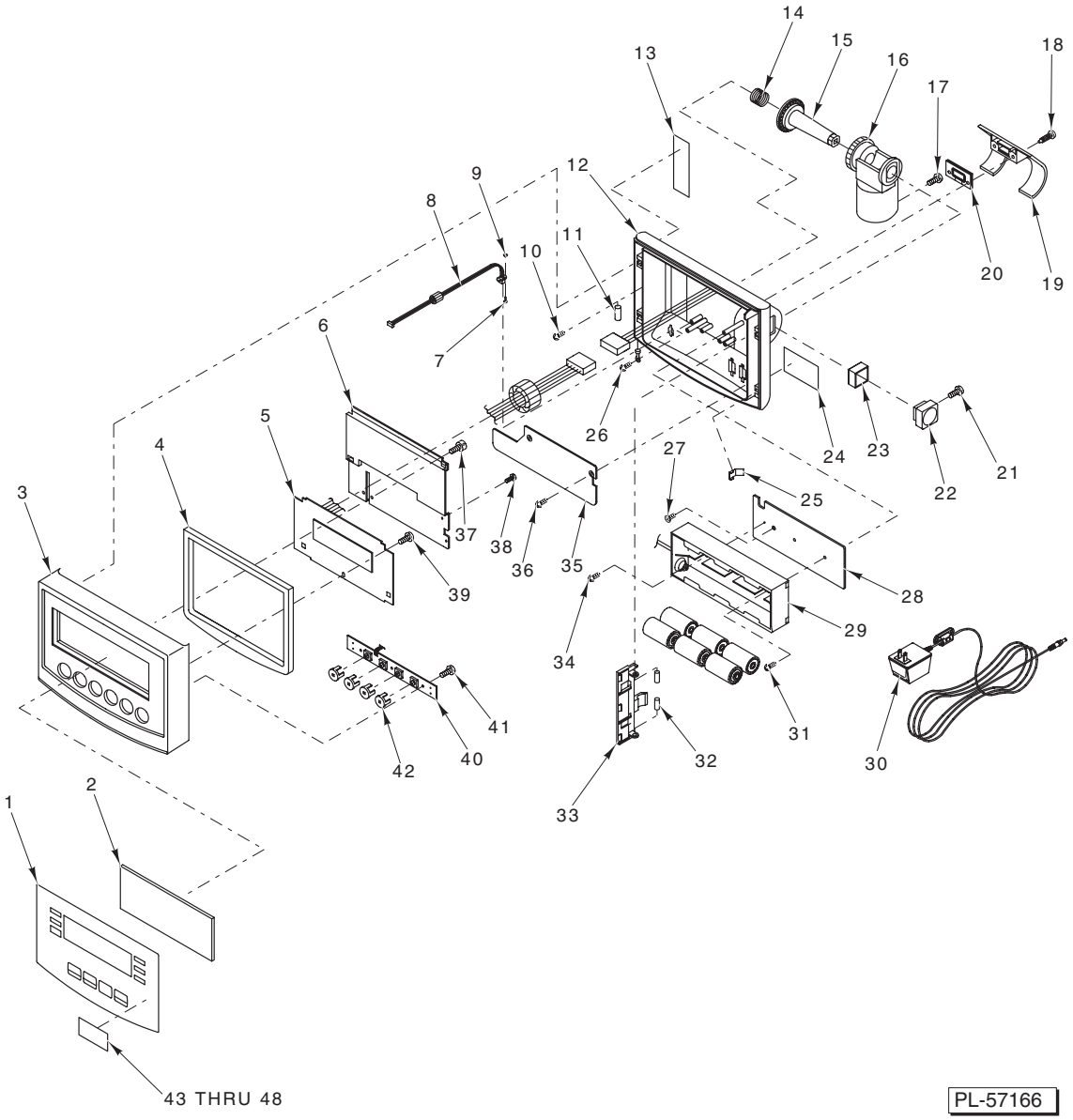

DISPLAY COMPONENTS

 © HOBART CORPORATION

DISPLAY COMPONENTS

ILLUS. PL-57166	PART NO.	NAME OF PART	AMT.
1	00-442772-00001	Overlay	1
2	00-442772-00002	Glass – Front	1
3	00-442772-00003	Housing – Front Indicator	1
4	00-442772-00004	Gasket – Front Indicator	1
5	00-442772-00005	Logic Board Assy.	1
6	00-442772-00010	Cover – Logic Board	1
7	00-442772-00026	Mach. Screw M2 x 10 Phil. Rd. Hd. (SST)	2
8	00-442772-00024	Cable – Adapter (AC Jack)	1
9	00-442772-00025	Nut M2 Hex (SST)	2
10	00-442772-00009	Self-Tapping Screw M3 x 8	2
11	00-442772-00017	Shaft – Hinge Side	2
12	00-442772-00013	Housing – Rear Indicator	1
13	00-442772-00038	Plate – Serial	1
14	00-442772-00030	Spring – Angle Adjuster	1
15	00-442772-00029	Angle Adjuster	1
16	00-442772-00028	Bracket – Adjustable Pole	1
17	00-442772-00027	Mach. Screw M4 x 10 Phil. Rd. Hd. (SST)	1
18	00-442772-00033	Self-Tapping Screw M4 x 16 (SST)	2
19	00-442772-00032	Cover – Pole	1
20	00-442772-00031	Gasket – Pole Cover	1
21	00-442772-00036	Self-Tapping Screw M3.5 x 12 (SST)	1
22	00-442772-00035	Button – Square (Angle Adjust)	1
23	00-442772-00034	Bracket – Button Support	1
24	00-442772-00037	Label – Cover Ports	1
25	00-442772-00016	Bracket – Spring (Indicator Latch)	2
26	00-442772-00023	Self-Tapping Screw M4 x 10	1
27	00-442772-00019	Mach. Screw M3 x 10 Phil. Pan Hd.	1
28	00-442772-00018	Plate – Mounting (Battery Box)	1
29	00-442772-00020	Holder – Battery	1
30	00-442772-00212	Power Supply	1
31	00-442772-00021	Self-Tapping Screw M3 x 6 Washer Hd.	1
32	00-442772-00014	Shaft – Latch Assy.	2
33	00-442772-00015	Bracket – Indicator Latch	1
34	00-442772-00022	Self-Tapping Screw M3 x 13 Washer Hd.	2
35	00-442772-00012	Plate – Cable Cover	1
36	00-442772-00009	Self-Tapping Screw M3 x 8	2
37	00-442772-00011	Sealing Screw M3 x 10	2
38	00-442772-00009	Self-Tapping Screw M3 x 8	3
39	00-442772-00008	Self-Tapping Screw M3 x 8 Felt Washer Hd.	2
40	00-442772-00006	Keyboard Assy.	1
41	00-442772-00008	Self-Tapping Screw M3 x 8 Felt Washer Hd.	2
42	00-442772-00007	Key Top – Plastic	1
43	00-442772-00039	Label – Capacity (60 Lb. x 0.02 Lb.)	1
44	00-442772-00040	Label – Capacity (60 Lb. x 0.5 Oz.)	1
45	00-442772-00041	Label – Capacity (960 Oz. x 0.5 Oz.)	1
46	00-442772-00045	Label – Capacity (300 Lb. x 0.1 Lb.)	1
47	00-442772-00046	Label – Capacity (300 Lb. x 2 Oz.)	1
48	00-442772-00047	Label – Capacity (4800 Oz. x 2 Oz.)	1

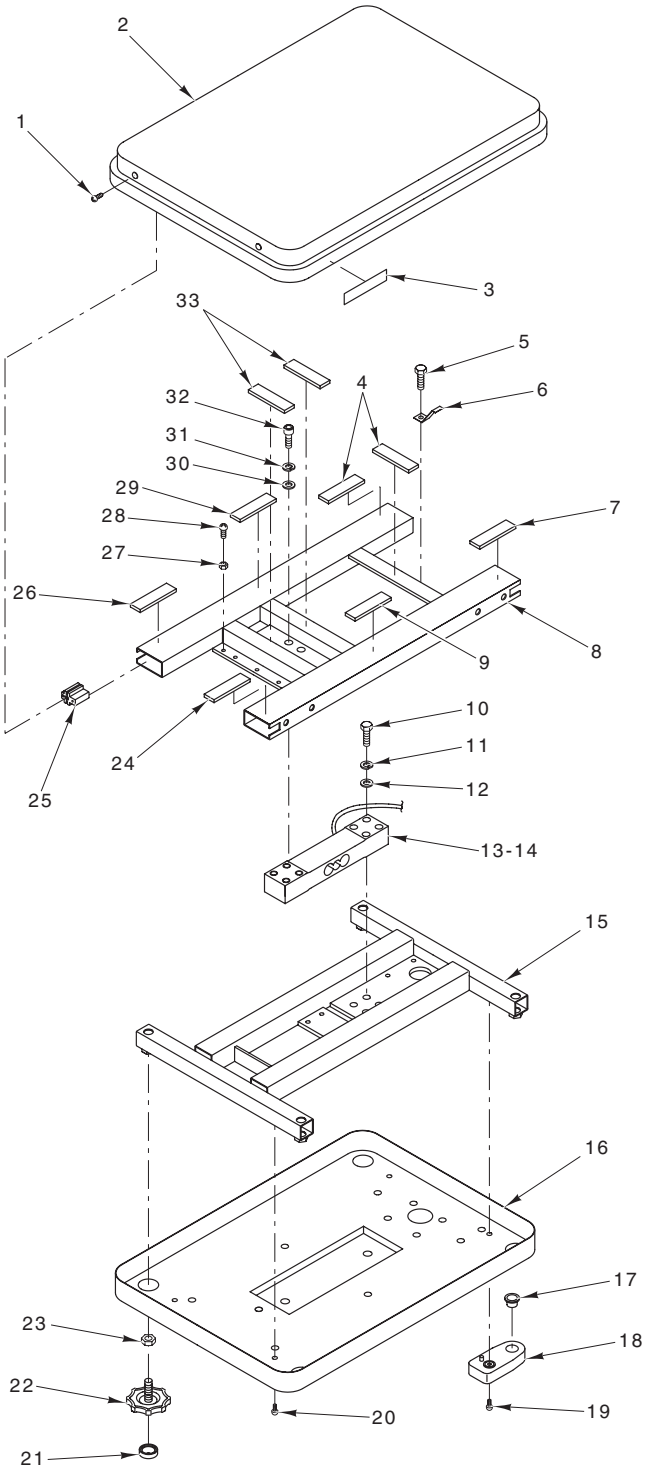

PLATFORM COMPONENTS

PLATFORM COMPONENTS

ILLUS. PL-57167	PART NO.	NAME OF PART	AMT.
1	00-442772-00102	Self-Tapping Screw M4 x 12 (SST)	4
2	00-442772-00101	Cover – Top	1
3	00-442772-00125	Label – Warning (Top Cover)	1
4	00-442772-00107	Cushion – Rubber (Top Spider)	2
5	00-442772-00106	Cap Screw M6 x 12 Hex Hd.	1
6	00-442772-00105	Plate – Grounding	1
7	00-442772-00107	Cushion – Rubber (Top Spider)	1
8	00-442772-00104	Spider – Top	1
9	00-442772-00107	Cushion – Rubber (Top Spider)	1
10	00-442772-00110	Cap Screw M10 x 45 Soc. Hd.	4
11	00-442772-00109	Lockwasher M10	4
12	00-442772-00126	Washer	4
13	00-442772-00113	Load Cell (ML-29241)	1
14	00-442772-00115	Load Cell (ML-29240)	1
15	00-442772-00116	Spider – Bottom	1
16	00-442772-00117	Cover – Bottom	1
17	00-442772-00122	Level – Bubble	1
18	00-442772-00123	Bracket – Level Bubble	1
19	00-442772-00124	Mach. Screw M4 x 15 Phil. Rd. Hd. (SST)	1
20	00-442772-00118	Mach. Screw M4 x 10 Phil. Rd. Hd. (SST)	3
21	00-442772-00121	Cap – Rubber	4
22	00-442772-00119	Leg – Level	4
23	00-442772-00120	Nut M10 Hex (SST)	4
24	00-442772-00107	Cushion – Rubber (Top Spider)	1
25	00-442772-00103	Plug – Spider (End Cap)	4
26	00-442772-00107	Cushion – Rubber (Top Spider)	1
27	00-442772-00111	Nut M6 Hex	4
28	00-442772-00112	Mach. Screw M6 x 25 Phil. Rd. Hd.	4
29	00-442772-00107	Cushion – Rubber (Top Spider)	1
30	00-442772-00126	Washer	4
31	00-442772-00109	Lockwasher M10	4
32	00-442772-00108	Cap Screw M10 x 25 Soc. Hd.	4
33	00-442772-00107	Cushion – Rubber (Top Spider)	2

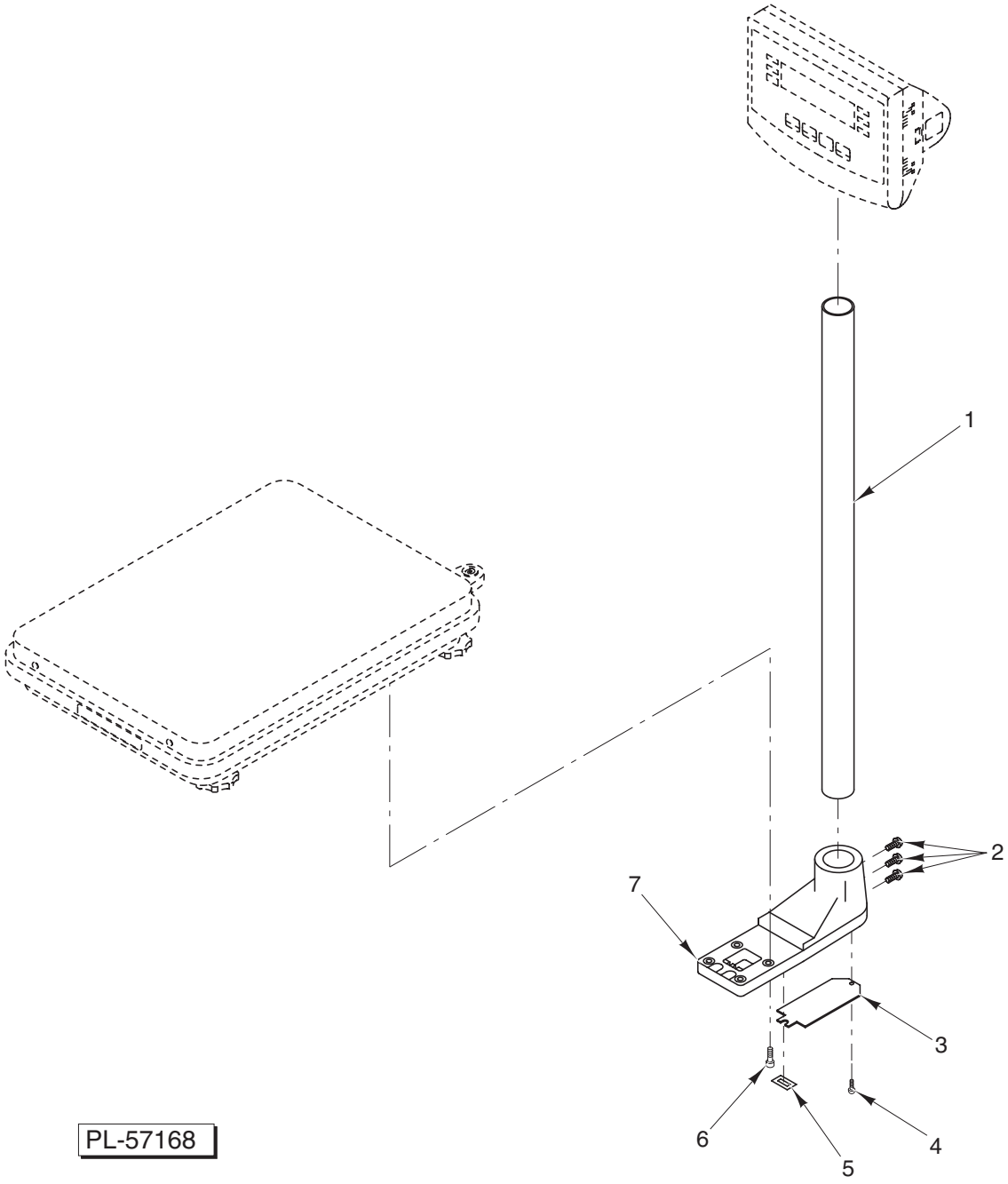

STAND UNIT

STAND UNIT

ILLUS. PL-57168	PART NO.	NAME OF PART	AMT.
1	00-442772-00201	Pole	1
2	00-442772-00118	Mach. Screw M4 x 15 Phil. Rd. Hd. (SST)	3
3	00-442772-00206	Cover – Pole Bracket	1
4	00-442772-00118	Mach. Screw M4 x 15 Phil. Rd. Hd. (SST)	1
5	00-442772-00205	Clip – Cover Pole	1
6	00-442772-00204	Cap Screw M6 x 25 Soc. Hd.	4
7	00-442772-00203	Bracket – Pole	1