HOBART

SERVICE

# CATALOG OF REPLACEMENT PARTS



33480

## HL300 LVN/HVN Navy Mixer

**ML-141164** **HL300 NAVY**

A Product of Hobart Service 701 S. Ridge Ave Troy, OH 45374

**FORM F43372 Rev. A (July 2026)**

 © HOBART SERVICE 2026

## Table of Contents


4 CONTROL PANEL
6 ELECTRICAL COMPONENTS
8 BASE AND PEDESTAL
10 ATTACHMENT HUB
12 TRANSMISSION CASE AND MOTOR
14 TRANSMISSION
16 PLANETARY
18 BOWL AND BOWL GUARD
20 BOWL SUPPORT
22 AGITATORS AND ACCESSORIES

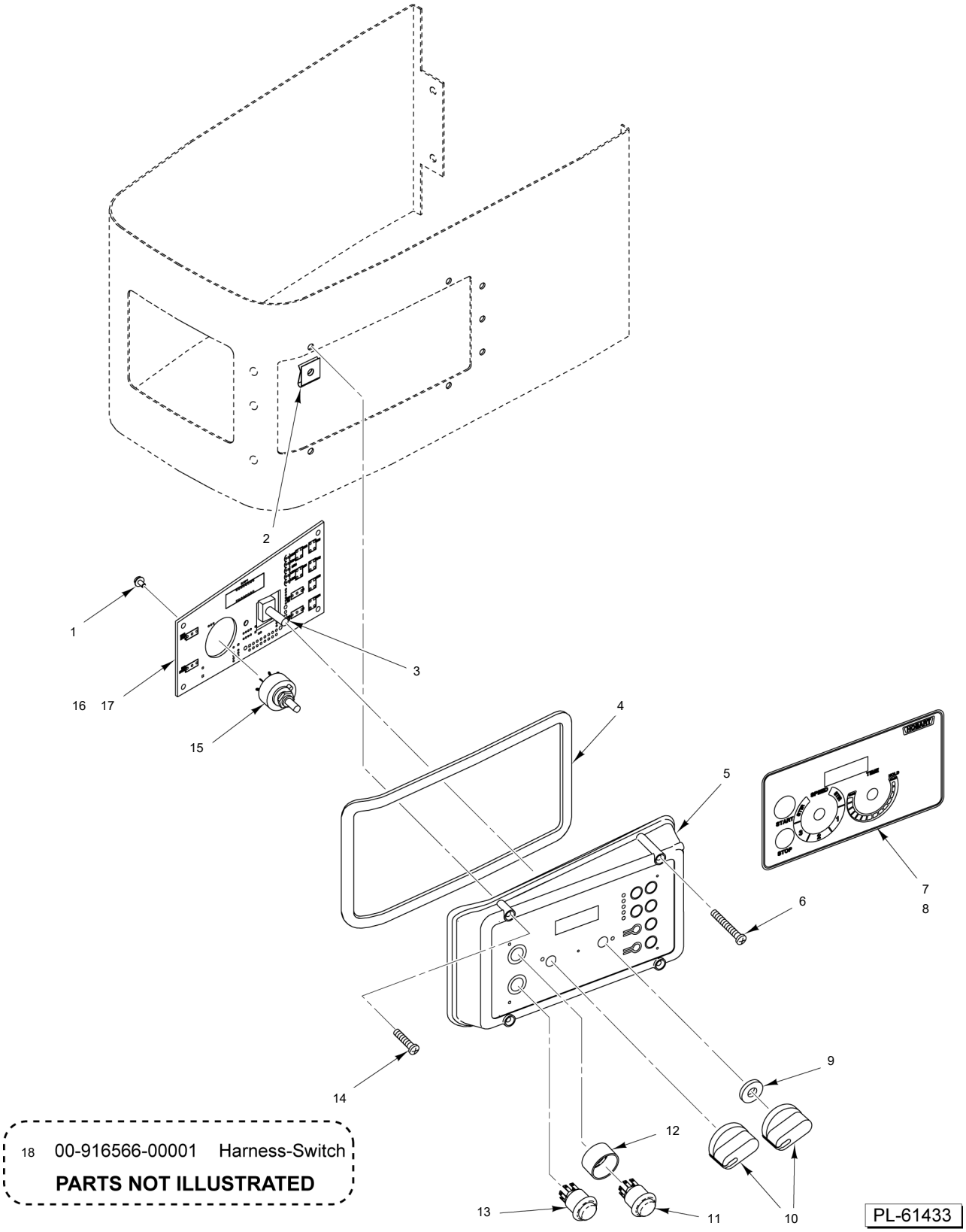


**CONTROL PANEL**

# CONTROL PANEL

| ILLUS. PL-61433 | PART NO. | NAME OF PART | AMT. |
|---|---|---|---|
| 1 | SD-039-23 | Self-Tapping Screw 6-32 x 1/4 Hex. Hex Washer Hd., Type RL | 5 |
| 2 | 00-874338 | Fastener - Self-Retaining | 4 |
| 3 | 00-916594 | Potentiometer Assy. | 1 |
| 4 | 00-916613 | Seal - Control Panel | 1 |
| 5 | 00-917302 | Panel - Control | 1 |
| 6 | SC-128-40 | Mach. Screw 8-32 x 2-1/4 Phil. Oval Hd. (SST) | 2 |
| 7 | 00-937066 | Overlay - Standard (6-Postition Speed Selector) | 1 |
| 8 | 00-937069 | Overlay - Recipe (6-Positition Speed Selector) | 1 |
| 9 | WS-031-55 | Washer (Rubber) | 1 |
| 10 | 00-874809 | Knob | 2 |
| 11 | 00-916593 | Switch - Sealed Dome (Start) | 1 |
| 12 | 00-916958-00002 | Guard - Switch | 1 |
| 13 | 00-916592 | Switch - Sealed Dome (Stop) | 1 |
| 14 | SC-128-39 | Mach. Screw 8-32 x 1-1/2 Phil. Oval Hd. (SST) | 2 |
| 15 | 00-937061 | Switch - Speed Selector Assy. (6-Position) | 1 |
| 16 | 00-937135 | PCB Assy. (Standard) (6-Position Speed Selector) | 1 |
| 17 | 00-937693 | PCB Assy. (Recipe Timer) (6-Position Speed Selector) | 1 |
| 18 | 00-916566-00001 | Harness - Switch | 1 |

| | | |
|---|---|---|
| 24 | FE-026-34 | Strain Relief - Electrical |
| 25 | 00-916649 | Harness - Main Wiring |
| 26 | 00-971161 | Clamp - Heavy Duty Cable |
| 27 | 00-874833-00001 | Cord & Plug Assy. |
| 28 | 00-874833-00002 | Cord & Plug Assy. |

**PARTS NOT ILLUSTRATED**

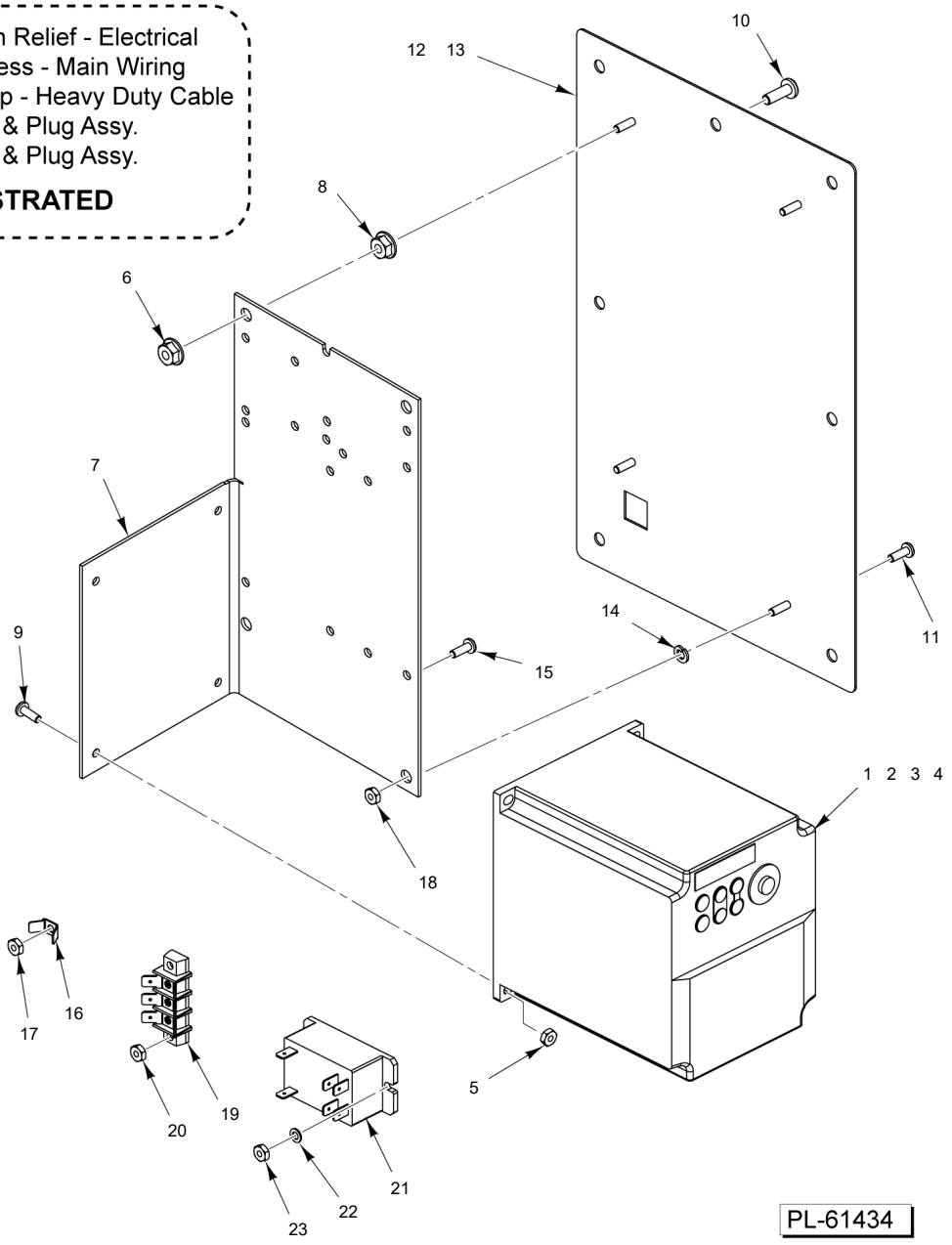


## ELECTRICAL COMPONENTS

# ELECTRICAL COMPONENTS

| ILLUS. PL-61434 | PART NO. | NAME OF PART | AMT. |
|---|---|---|---|
| 1 | 00-916761 | Controller (100/120 V., 50/60 Hz., 1 Ph.) | 1 |
| 2 | 00-916762 | Controller (200/230 V., 50/60 Hz., 1 Ph.) | 1 |
| 3 | 00-916763 | Controller (200/230 V., 50/60 Hz., 3 Ph.) | 1 |
| 4 | 00-916764 | Controller (380/480 V., 50/60 Hz., 3 Ph.) | 1 |
| 5 | WS-023-48 | Washer | 4 |
| 6 | NS-038-04 | Lock Nut 1/4-20 Flange | 4 |
| 7 | 00-937859 | Plate - Controller Mounting | 1 |
| 8 | NS-038-04 | Lock Nut 1/4-20 Flange | 4 |
| 9 | SC-018-34 | Mach. Screw 8-32 x 1/2 Phil. Pan Hd. | 4 |
| 10 | SC-053-46 | Mach. Screw 1/4-20 x 3/4 Slotted Truss Hd. (SST) | 7 |
| 11 | SC-018-33 | Mach. Screw 8-32 x 5/16 Phil. Pan Hd. | 1 |
| 12 | 00-916772-00001 | Cover - Back & Studs (100/120 V. & 200/230 V., 1 Ph.) | 1 |
| 13 | 00-916772-00002 | Cover - Back & Studs (200/230 V. & 380/480 V., 3 Ph.) | 1 |
| 14 | WL-003-12 | Lockwasher #8 Helical | 1 |
| 15 | SC-018-34 | Mach. Screw 8-32 x 1/2 Phil. Pan Hd. | 5 |
| 16 | 00-065890-00090 | Terminal (2-Tab) | 1 |
| 17 | NS-009-12 | Nut 8-32 Hex | 1 |
| 18 | NS-038-04 | Lock Nut 1/4-20 Flange | 1 |
| 19 | 00-916269 | Block - Terminal | 1 |
| 20 | NS-009-12 | Nut 8-32 Hex | 2 |
| 21 | 00-087714-042-5 | Relay (2-Pole, 30 Amp.) | 1 |
| 22 | WS-023-48 | Washer | 2 |
| 23 | NS-009-12 | Nut 8-32 Hex | 2 |
| 24 | FE-026-34 | Strain Relief - Electrical | 1 |
| 25 | 00-916649 | Harness - Main Wiring | 1 |
| 26 | 00-917761 | Clamp, Cable Heavy Duty | 1 |
| 27 | 00-874833-00001 | Cord & Plug Assy. (120 V.) | 1 |
| 28 | 00-874833-00002 | Cord & Plug Assy. (220 V.) | 1 |

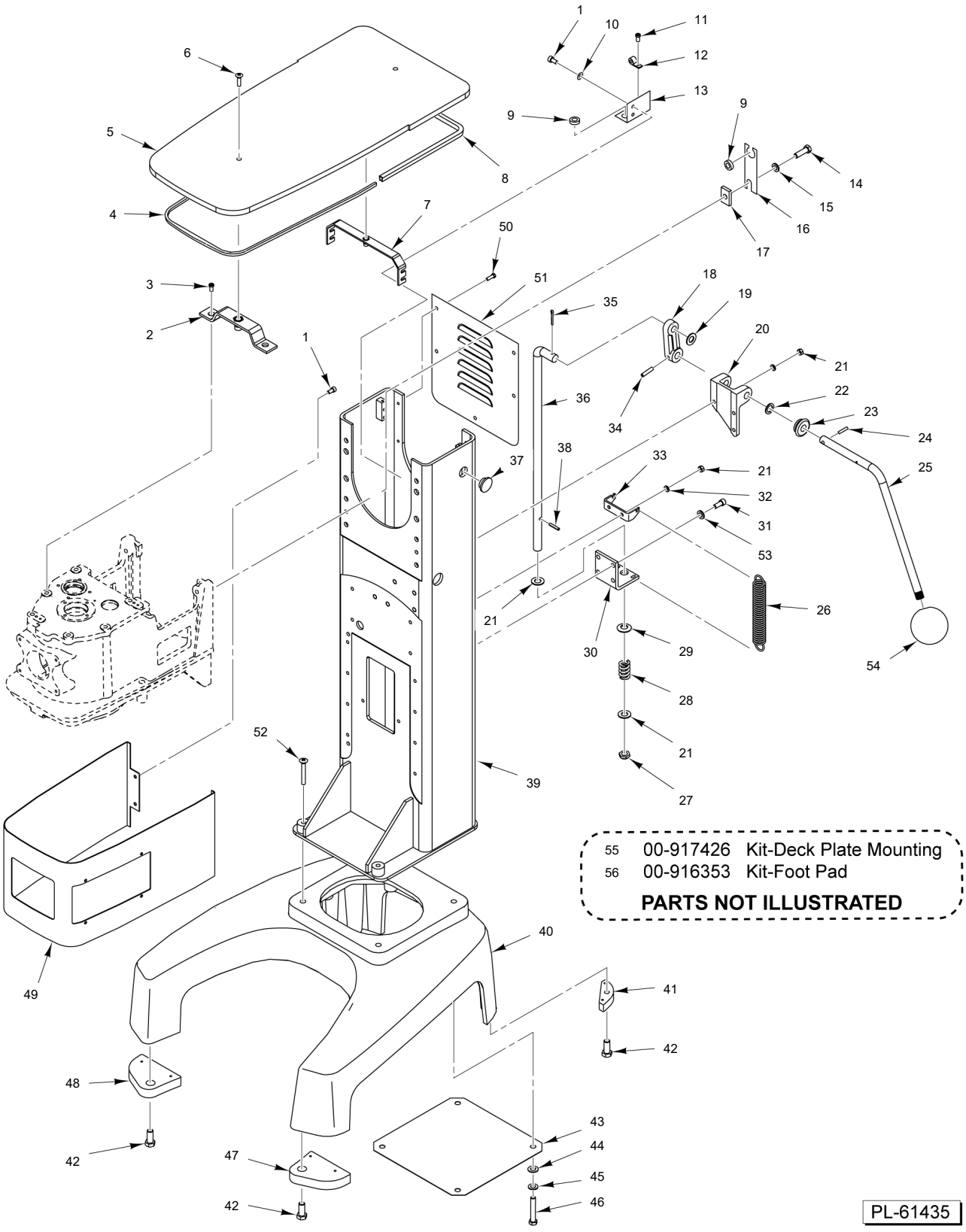


**BASE AND PEDESTAL**

# BASE AND PEDESTAL

| ILLUS. PL-31957 | PART NO. | NAME OF PART | AMT. |
|---|---|---|---|
| 1 | SC-129-49 | Mach. Screw 1/4-20 x 1/2 Hex Washer Hd. (SST) | 3 |
| 2 | 00-938280 | Strap - Front Cover Mounting | 1 |
| 3 | SC-089-19 | Cap Screw 5/16-18 x 1-3/8 Hex Socket Hd. | 2 |
| 4 | 00-874512-00003 | Seal - Top Cover | 1 |
| 5 | 00-937856 | Cover - Top | 1 |
| 6 | SC-024-03 | Mach. Screw 1/4-20 x 7/8 Slotted Fil. Hd. (SST) (SST) | 2 |
| 7 | 00-938281 | Strap - Rear Cover Mounting | 1 |
| 8 | 00-916535-00001 | Seal - Top Cover | 1 |
| 9 | FE-021-13 | Bushing (Nylon) 1/2 I.D. | AR |
| 10 | WS-003-19 | Washer | 3 |
| 11 | SD-019-23 | Self-Tapping Screw 10-16 x 3/8 Phil. Pan Hd., Type B | 1 |
| 12 | 00-078752-00009 | Clamp - Cable | 1 |
| 13 | 00-937123 | Bracket | 1 |
| 14 | SC-118-09 | Cap Screw 3/8-16 x 1-1/4 Hex Hd. | 6 |
| 15 | WL-004-06 | Lockwasher 3/8 Helical | 6 |
| 16 | 00-916815 | Plate - Wire Routing | 1 |
| 17 | 00-271340 | Bar - Reinforcing | 6 |
| 18 | 00-916467 | Arm - Bowl Lift | 1 |
| 19 | WS-008-47 | Washer | AR |
| 20 | 00-916442 | Block - Bowl Lift Bearing | 1 |
| 21 | NS-013-02 | Nut 1/4-20 Hex | AR |
| 22 | WS-020-01 | Washer (SST) | 1 |
| 23 | 00-271343 | Grommet - Handle | 1 |
| 24 | RP-002-25 | Roll Pin 1/8 Dia. x 7/8 Lg. | 1 |
| 25 | 00-937858 | Handle - Bowl Lift | 1 |
| 26 | 00-916463 | Spring - Bowl Lift | 2 |
| 27 | NS-031-39 | Stop Nut 1/2-20 Hex Elastic | 1 |
| 28 | 00-070104 | Spring - Bowl Lift | 1 |
| 29 | 00-070131 | Washer - Cup Bowl Lift | 1 |
| 30 | 00-937854 | Bracket - Bowl Lift Support | 1 |
| 31 | SC-041-13 | Cap Screw 5/16-18 x 1 Hex Hd. (SST) | 4 |
| 32 | WL-003-38 | Lockwasher 1/4 Helical | 2 |
| 33 | 00-916449 | Hook - Bowl Lift Spring | 1 |
| 34 | PS-004-15 | Spiral Pin 1/4 Dia. x 1-1/8 Lg. | 1 |
| 35 | PC-006-13 | Cotter Pin | 1 |
| 36 | 00-937853 | Rod - Bowl Lift | 1 |
| 37 | PB-005-30 | Plug - Button | 1 |
| 38 | RP-002-10 | Roll Pin 3/16 Dia. x 1 Lg. | 1 |
| 39 | 00-937852 | Column | 1 |
| 40 | 00-916213-00004 | Base | 1 |
| 41 | 00-916309 | Pad - Rear | 2 |
| 42 | SC-110-36 | Cap Screw 3/8-16 x 1 Hex Flat Hd. (SST) | AR |
| 43 | 00-916549 | Screen - Air Floor | 1 |
| 44 | WS-018-19 | Washer | 4 |
| 45 | WL-004-04 | Lockwasher 3/8 Helical | 4 |
| 46 | SC-118-05 | Cap Screw 3/8-16 x 2-3/4 Hex Hd. | 4 |
| 47 | 00-916308 | Pad - Front (RH) | 1 |
| 48 | 00-916549 | Screen - Air Floor | 1 |
| 49 | 00-916387-00002 | Wrapper - Transmission | 1 |
| 50 | SC-053-46 | Mach. Screw 1/4-20 x 3/4 Slotted Truss Hd. (SST) | 5 |
| 51 | 00-937855 | Cover - Rear | 1 |
| 52 | 00-938602 | Screw | 4 |
| 53 | WL-006-22 | Lockwasher 5/16 Light (SST) | 1 |
| 54 | 00-938579 | Knob | 1 |
| 55 | 00-917426 | Kit - Deck Plate Mounting (Incls. 4 Deck Plates and Hardware) | 1 |
| 56 | 00-916353 | Kit - Foot Pad (Incls. Items 41, 42, 47, & 48) | 1 |

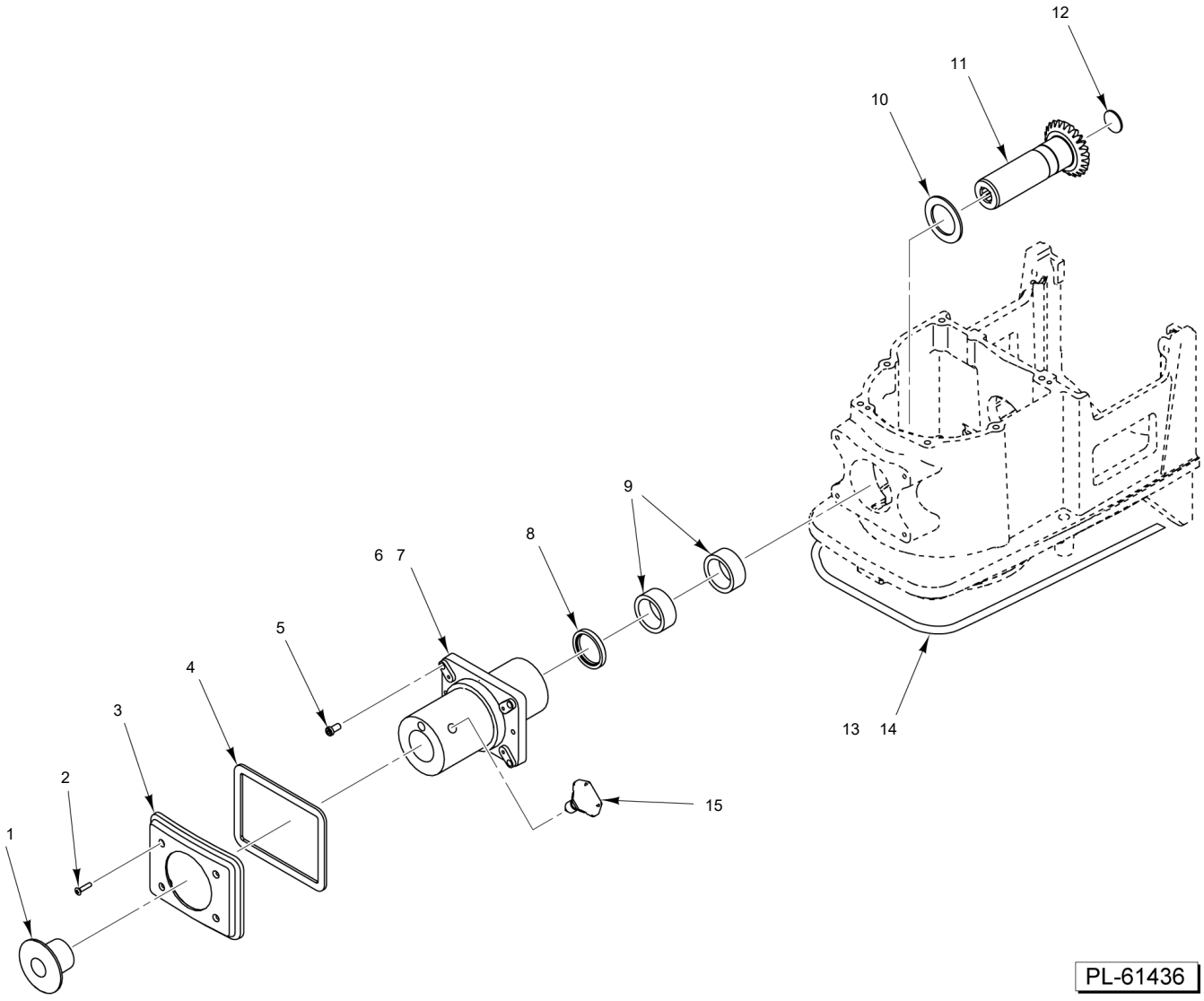


## ATTACHMENT HUB

# ATTACHMENT HUB

| ILLUS. PL-61436 | PART NO. | NAME OF PART | AMT. |
|---|---|---|---|
| 1 | 00-917221 | Plug - Attachment | 1 |
| 2 | SC-079-04 | Mach. Screw 8-32 x 3/4 Phil. Oval Hd. (SST) | 4 |
| 3 | 00-917222 | Panel - Front | 1 |
| 4 | 00-875813 | Seal - Front Cover | 1 |
| 5 | SC-040-09 | Cap Screw 1/4-20 x 1-1/4 Hex Socket Hd. | 4 |
| 6 | 00-916662-00002 | Hub - Attachment | 1 |
| 7 | OR-001-09 | O-Ring | 1 |
| 8 | 00-916733 | Seal - Attachment Hub | 1 |
| 9 | BN-005-11 | Bearing - Needle | 2 |
| 10 | 00-061920-00009 | Washer - Thrust (0.100 Thk.) | 1 |
| 11 | 00-916601-00002 | Gear - Drive Attachment (Incls. Item 13) | 1 |
| 12 | PL-003-17 | Plug - Expansion | 1 |
| 13 | 00-874925-00008 | Seal - Neoprene | 1 |
| 14 | 00-874925-00009 | Seal - Neoprene | 1 |
| 15 | 00-108197-00001 | Thumb Screw 1-1/4 | 1 |

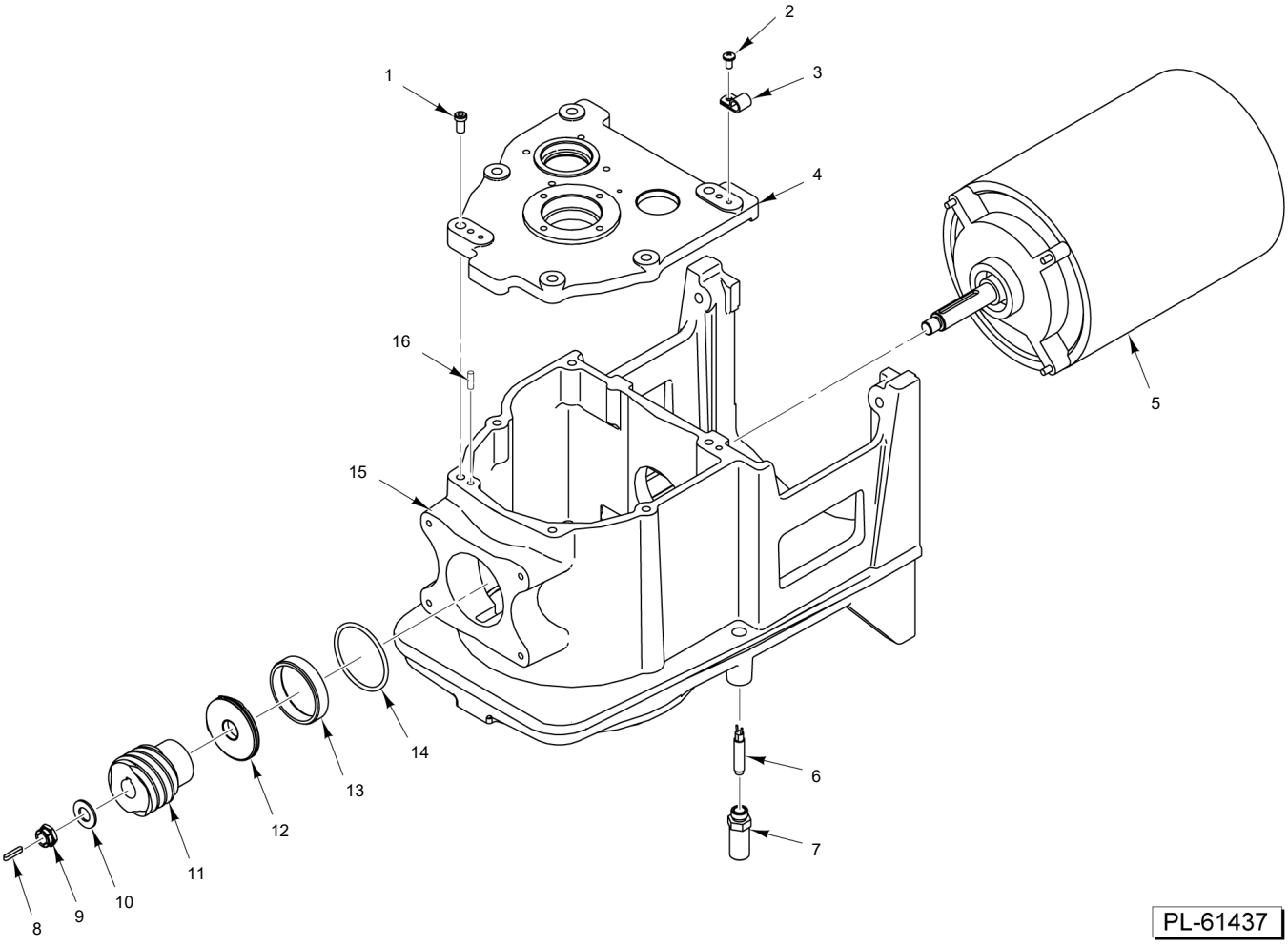


## TRANSMISSION CASE AND MOTOR

# TRANSMISSION CASE AND MOTOR

| ILLUS. PL-61437 | PART NO. | NAME OF PART | AMT. |
|---|---|---|---|
| 1 | SC-040-15 | Cap Screw 5/16-18 x 1-1/4 Hex Socket Hd. | 6 |
| 2 | SC-018-62 | Mach. Screw 10-24 x 3/8 Phil. Pan Hd. | 1 |
| 3 | 00-078752-00009 | Clamp - Cable | 1 |
| 4 | 00-916324 | Cover - Top | 1 |
| 5 | 00-916446 | Motor | 1 |
| 6 | 00-087711-00352 | Switch - Reed | 1 |
| 7 | 00-917596 | Holder - Reed Switch | 1 |
| 8 | 00-012430-00069 | Key 3/16 x 3/16 x 1-39/64 | 1 |
| 9 | NS-032-23 | Lock Nut 7/16-20 Special | 1 |
| 10 | WS-021-08 | Washer | 1 |
| 11 | 00-916338 | Worm - Motor | 1 |
| 12 | 00-937535 | Deflector - Grease (RH) | 1 |
| 13 | 00-939026 | Kit, Deflector | 1 |
| 14 | 00-067500-00057 | O-Ring | 1 |
| 15 | 00-916326-00003 | Transmission | 1 |
| 16 | 00-011800-00187 | Dowel | 2 |

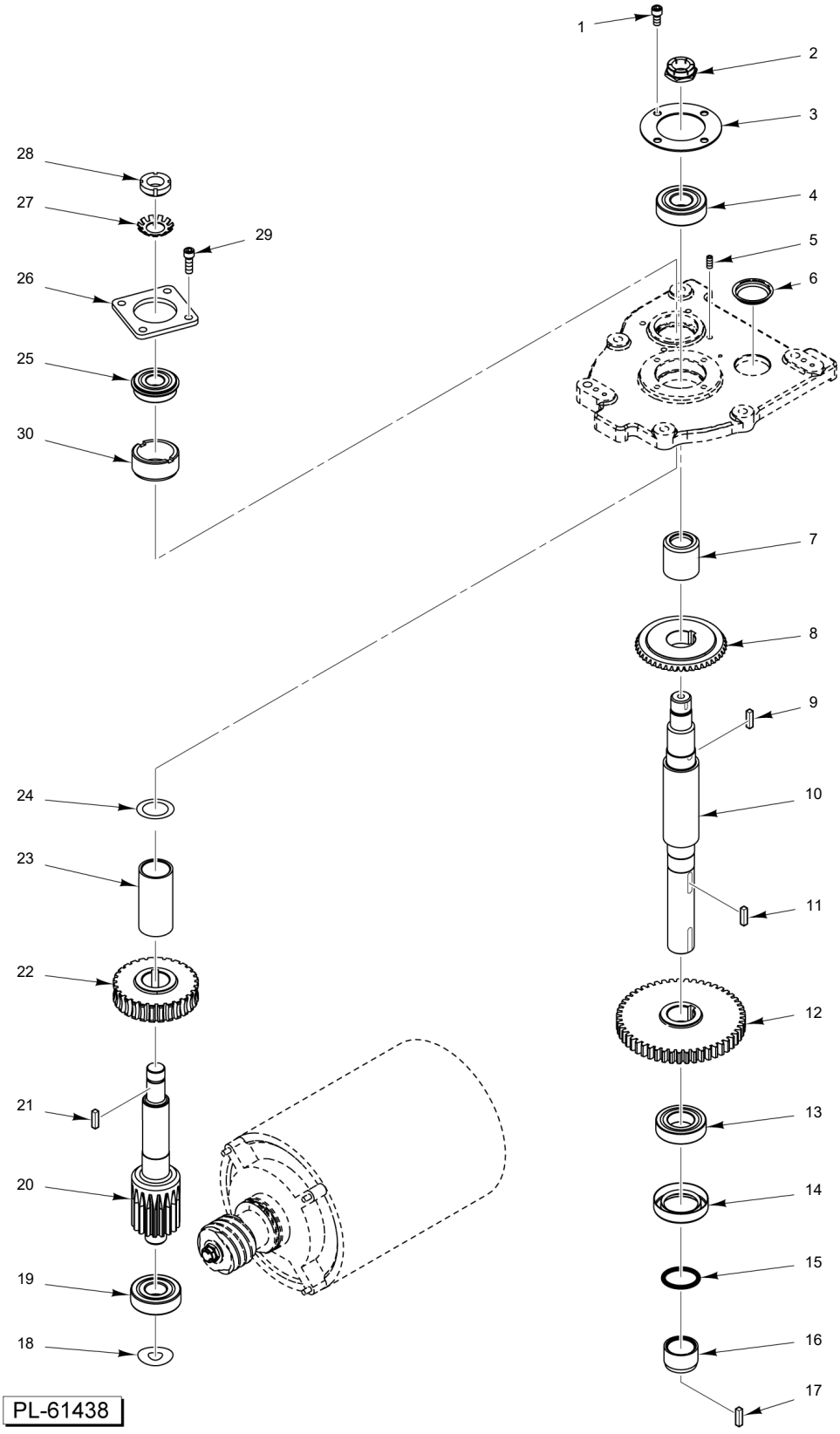


**TRANSMISSION**

# TRANSMISSION

| ILLUS. PL-61438 | PART NO. | NAME OF PART | AMT. |
|---|---|---|---|
| 1 | SC-089-01 | Cap Screw 1/4-20 x 1/2 Hex Socket Hd. | 4 |
| 2 | 00-937473 | Nut 3/4-16 (LH Thread) | 2 |
| 3 | 00-916439-00002 | Retainer - Planetary | 1 |
| 4 | BB-005-34 | Ball Bearing | 1 |
| 5 | SC-047-09 | Set Screw 1/4-20 x 1/4 Hex Hdls., Cup Pt. | AR |
| 6 | 00-064871 | Plug - Friction | 1 |
| 7 | 00-916665 | Spacer - Upper Planetary | 1 |
| 8 | 00-070020-00002 | Gear - Bevel (46T) | 1 |
| 9 | 00-012430-00134 | Key | 1 |
| 10 | 00-916667 | Shaft - Planetary | 1 |
| 11 | 00-012430-00136 | Key | 1 |
| 12 | 00-916666 | Gear - Helical (51T) | 1 |
| 13 | BB-015-08 | Bearing - Ball | 1 |
| 14 | 00-110334 | Seal - Planetary | 1 |
| 15 | 00-067500-00068 | O-Ring | 1 |
| 16 | 00-916663 | Spacer - Lower Planetary | 1 |
| 17 | 00-012430-00158 | Key | 1 |
| 18 | SL-005-04 | Spring - Loading | 1 |
| 19 | BB-005-34 | Ball Bearing | 1 |
| 20 | 00-916340 | Shaft - Worm Gear | 1 |
| 21 | 00-012430-00138 | Key 1/4 Sq. x 3/4 Lg. | 1 |
| 22 | 00-916339 | Gear - Worm | 1 |
| 23 | 00-916357 | Spacer - Input Shaft | 1 |
| 24 | 00-916358 | Spacer - Upper Input Shaft | 1 |
| 25 | BB-021-21 | Bearing - Ball | 1 |
| 26 | 00-916438 | Retainer - Wormwheel | 1 |
| 27 | WL-012-04 | Lockwasher N.D. #W-03 | 1 |
| 28 | NS-034-04 | Lock Nut N.D. #N-03 | 1 |
| 29 | SC-089-02 | Cap Screw 1/4-20 x 3/4 Hex Socket Hd. | 4 |
| 30 | 00-271301-00002 | Sleeve - Worm Gear Adjustment | AR |

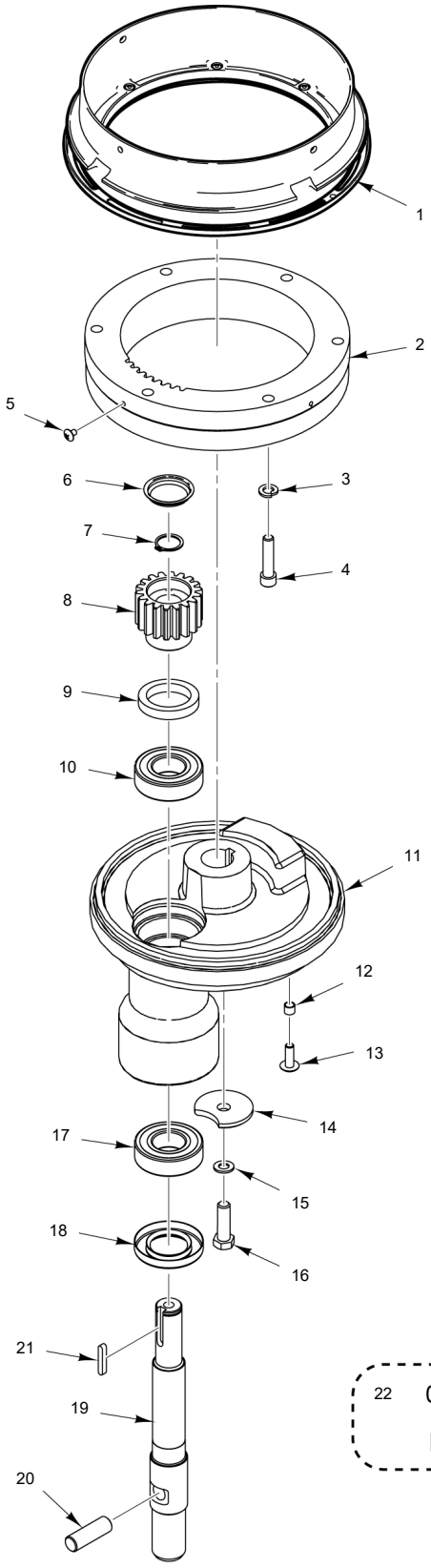


22 00-916437-00001 Planetary Assy.

**PARTS NOT ILLUSTRATED**

PL-61439

**PLANETARY**

# PLANETARY

| ILLUS. PL-61439 | PART NO. | NAME OF PART | AMT. |
|---|---|---|---|
| 1 | 00-916363 | Flange - Dripcup | 1 |
| 2 | 00-916416-00001 | Gear - Internal | 1 |
| 3 | WL-003-48 | Lockwasher 5/16 High Collar | 6 |
| 4 | SC-089-19 | Cap Screw 5/16-18 x 1-3/8 Hex Socket Hd. | 6 |
| 5 | SC-066-13 | Mach. Screw 8-32 x 1/4 Phil. Truss Hd. (SST) | 3 |
| 6 | 00-064871 | Plug - Friction | 1 |
| 7 | RR-004-06 | Retaining Ring | 1 |
| 8 | 00-916461 | Pinion - Agitator Shaft | 1 |
| 9 | 00-916563 | Seal - Upper Agitator Shaft | 1 |
| 10 | BB-020-06 | Ball Bearing (Fafnir 204KDFA51580) | 1 |
| 11 | 00-916435 | Planetary | 1 |
| 12 | 00-874770 | Spacer - Bowl Scraper | 2 |
| 13 | SC-053-46 | Mach. Screw 1/4-20 x 3/4 Slotted Truss Hd. (SST) | 2 |
| 14 | 00-917743 | Washer - Planetary Assy | 1 |
| 15 | WL-006-28 | Lockwasher 3/8 Helical (SST) | 1 |
| 16 | SC-062-58 | Cap Screw 3/8-24 x 1-1/4 Hex Hd. | 1 |
| 17 | BB-017-36 | Ball Bearing - SKF #6205Z | 1 |
| 18 | 00-110335 | Seal - Agitator Shaft | 1 |
| 19 | 00-916457 | Shaft - Agitator | 1 |
| 20 | 00-070019 | Pin - Agitator | 1 |
| 21 | 00-012430-00142 | Key 1/4 x 1/4 x 1 | 1 |
| 22 | 00-916437-00001 | Planetary Assy. (Incls. Items 7 thru 14 & 18 thru 21 | 1 |

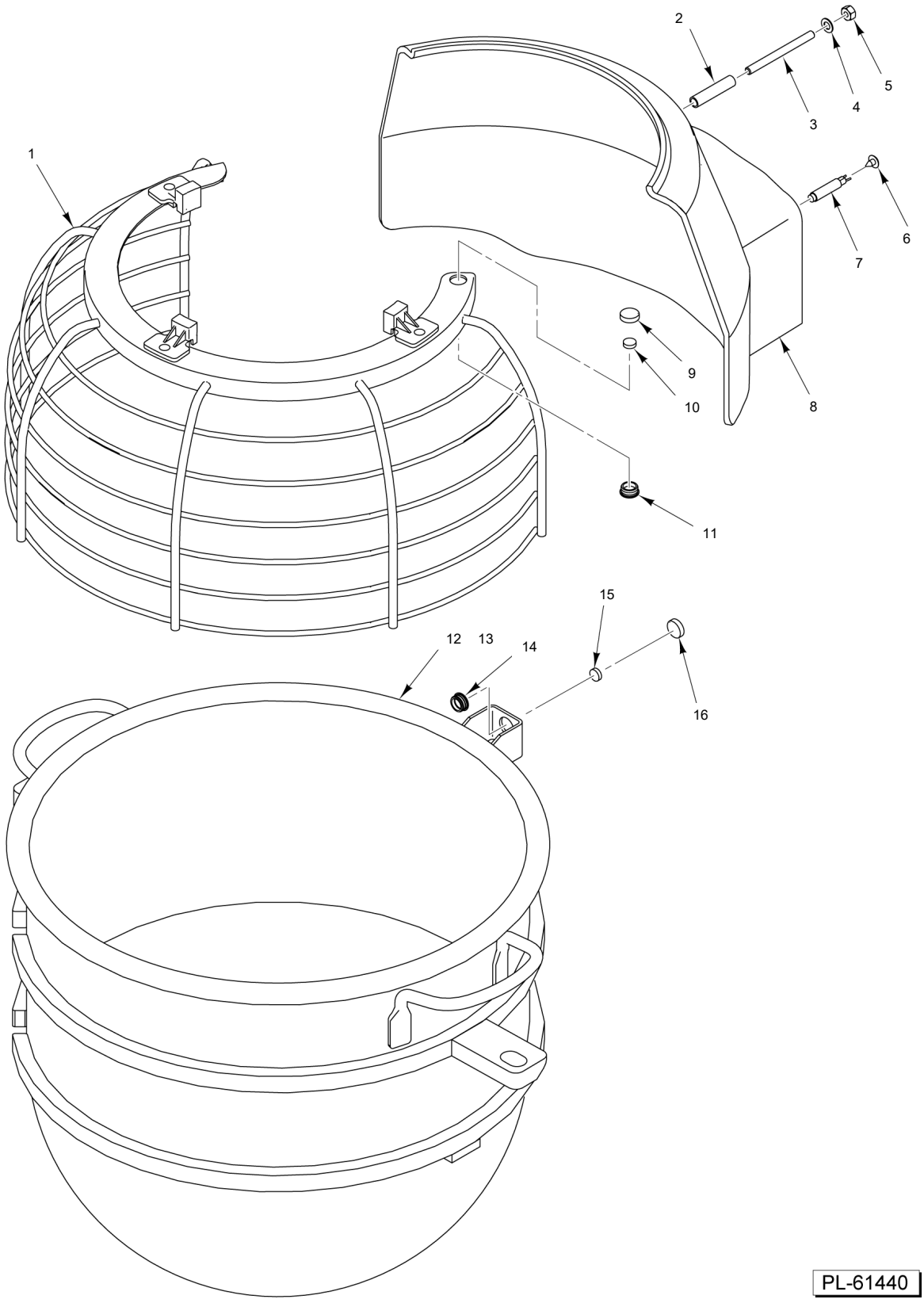


## BOWL AND BOWL GUARD

# BOWL AND BOWL GUARD

| ILLUS. PL-61440 | PART NO. | NAME OF PART | AMT. |
|---|---|---|---|
| 1 | 00-937210-00001 | Wire Cage Assy. (Incls. Items 9, 10, & 11) | 1 |
| 2 | 00-916610 | Spacer - Splash Guard | 4 |
| 3 | 00-916671 | Rod - Splash Guard | 4 |
| 4 | WS-003-19 | Washer | 4 |
| 5 | NS-013-02 | Nut 1/4-20 Hex | 4 |
| 6 | SD-034-19 | Self-Tapping Screw 10-16 x 3/8 Phil. Truss Hd., Type AB | 1 |
| 7 | 00-087711-00352 | Switch - Reed | 1 |
| 8 | 00-917228 | Guard - Splash Back | 1 |
| 9 | 00-917357 | Holder - Magnet (Upper) | 1 |
| 10 | 00-874875 | Magnet - Disc | 1 |
| 11 | 00-917358 | Holder - Magnet (Lower) | 1 |
| 12 | 00-916617 | Bowl Assy. (20 Qt.) | 1 |
| 13 | 00-916616 | Bowl Assy. (30 Qt.) | 1 |
| 14 | 00-917358 | Holder - Magnet (Lower) | 1 |
| 15 | 00-874875 | Magnet - Disc | 1 |
| 16 | 00-917357 | Holder - Magnet (Upper) | 1 |

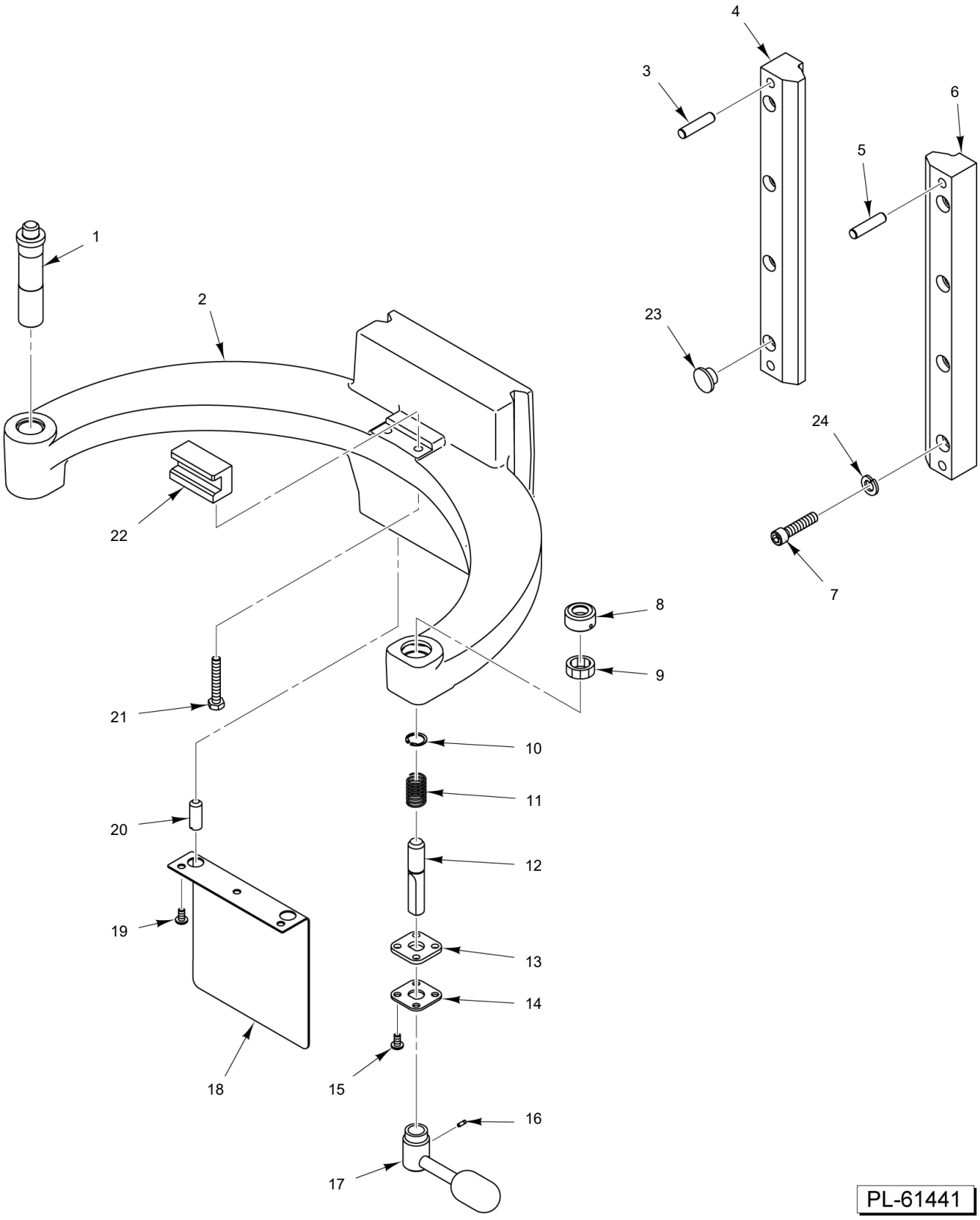


**BOWL SUPPORT**

# BOWL SUPPORT

| ILLUS. PL-61441 | PART NO. | NAME OF PART | AMT. |
|---|---|---|---|
| 1 | 00-916516 | Pin - Bowl (LH) | 1 |
| 2 | 00-916497 | Support - Bowl | 1 |
| 3 | 00-011800-00141 | Dowel 1/16 x 1-3/16 | 2 |
| 4 | 00-916365-00001 | Slideway - Bowl Lift (LH) | 1 |
| 5 | 00-011800-00141 | Dowel 1/16 x 1-3/16 | 2 |
| 6 | 00-916365-00002 | Slideway - Bowl Lift (RH) | 1 |
| 7 | SC-089-19 | Cap Screw 5/16-18 x 1-3/8 Hex Socket Hd. | 8 |
| 8 | 00-916501 | Ramp | 1 |
| 9 | 00-916502 | Bushing - Split | 1 |
| 10 | RR-012-47 | Retaining Ring SST. | 1 |
| 11 | 00-916488 | Spring - Compression | 1 |
| 12 | 00-916505 | Pin - Bowl (RH) | 1 |
| 13 | 00-916550 | Glide - Bowl Release | 1 |
| 14 | 00-916506 | Plate - Bowl Release | 1 |
| 15 | SC-093-23 | Mach. Screw 10-24 x 3/8 Phil. Pan Hd. (SST) | 4 |
| 16 | SC-047-74 | Set Screw 8-32 x 1/4 Hex Hdls. Cup Pt. | 1 |
| 17 | 00-916504-00001 | Handle - Bowl Release | 1 |
| 18 | 00-916470 | Apron - Lower | 1 |
| 19 | SC-093-23 | Mach. Screw 10-24 x 3/8 Phil. Pan Hd. (SST) | 3 |
| 20 | SC-129-59 | Set Screw 3/8-16 x 1 | 2 |
| 21 | SC-097-15 | Cap Screw 1/4-20 x 1-5/8 Hex Hd. | 2 |
| 22 | 00-916515 | Catch - Rear Bowl | 1 |
| 23 | PB-004-96 | Cap | 8 |
| 24 | WL-003-48 | Lockwasher 5/16 High Collar | 8 |

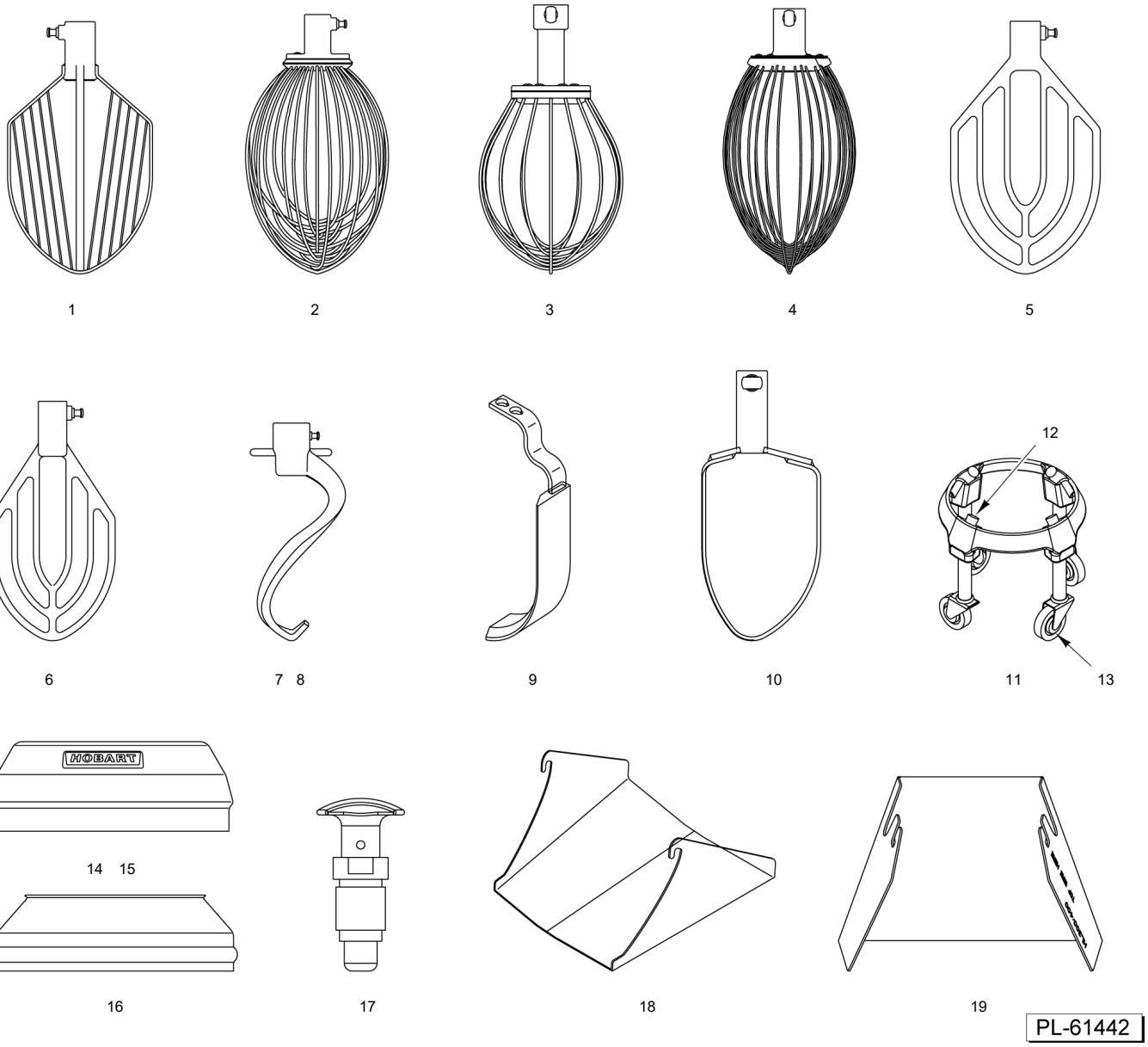


## AGITATORS AND ACCESSORIES

# AGITATORS AND ACCESSORIES

| ILLUS. PL-61442 | PART NO. | NAME OF PART | AMT. |
|---|---|---|---|
| 1 | 00-916573 | "C" Wire Whip (30 & 40 Qt.) (Packaged) | 1 |
| 2 | 00-916598 | "D" Wire Whip (20 Qt.) (Packaged) | 1 |
| 3 | 00-916520 | "I" Wire Whip (30 & 40 Qt.) (Packaged) | 1 |
| 4 | 00-916421 | "D" Wire Whip (30 & 40 Qt.) (Packaged) | 1 |
| 5 | 00-916372 | "B" Beater (30 & 40 Qt.) (Packaged) | 1 |
| 6 | 00-916582 | "B" Flat Beater (20 Qt.) (Packaged) | 1 |
| 7 | 00-916827 | "ED" Dough Arm (20 Qt.) (Packaged) | 1 |
| 8 | 00-916618-00001 | "ED" Hook (30 & 40 Qt.) (Packaged) | 1 |
| 9 | 00-916838 | Bowl Scraper (30 Qt.) (Packaged) | 1 |
| 10 | 00-916481 | "P" Pastry Knife (30 & 40 Qt.) (Packaged) | 1 |
| 11 | 00-916883 | Bowl Truck Assy. | 1 |
| 12 | 00-018682-00001 | Foot | 4 |
| 13 | 00-087668-00002 | Caster | 4 |
| 14 | 00-438079 | Splash Cover & Bowl Extension (20 Qt.) (Packaged) (Lexan) | 1 |
| 15 | 00-438080 | Splash Cover Assy. - 30 Qt. (Packaged) (Lexan) | 1 |
| 16 | 00-875677 | Splash Cover (20 Qt.) (Packaged) (SST) | 1 |
| 17 | 00-874753 | Plunger Assy. | 1 |
| 18 | 00-916684 | Ingredient Chute (20 Qt.) (Packaged) | 1 |
| 19 | 00-438607 | Ingredient Chute (30 Qt.) (Packaged) | 1 |