HOBART

CATALOG OF REPLACEMENT PARTS



HL400 SERIES LEGACY MIXER

ML-134348	**HL400**
ML-134359	**HL400C**
ML-141096	**HL400 (Canada)**

A product of HOBART 701 S. RIDGE AVENUE TROY, OHIO 45374-0001

FORM 43137 Rev. H (July 2024)

 © HOBART 2024

Table of Contents

5 CONTROL PANEL
7 ELECTRICAL COMPONENTS
9 BASE AND PEDESTAL
11 ATTACHMENT HUB
13 TRANSMISSION CASE AND MOTOR
15 TRANSMISSION
17 PLANETARY
19 BOWL SUPPORT
21 BOWL AND BOWL GUARD
23 AGITATORS AND ACCESSORIES
25 LABELS & NAMEPLATES

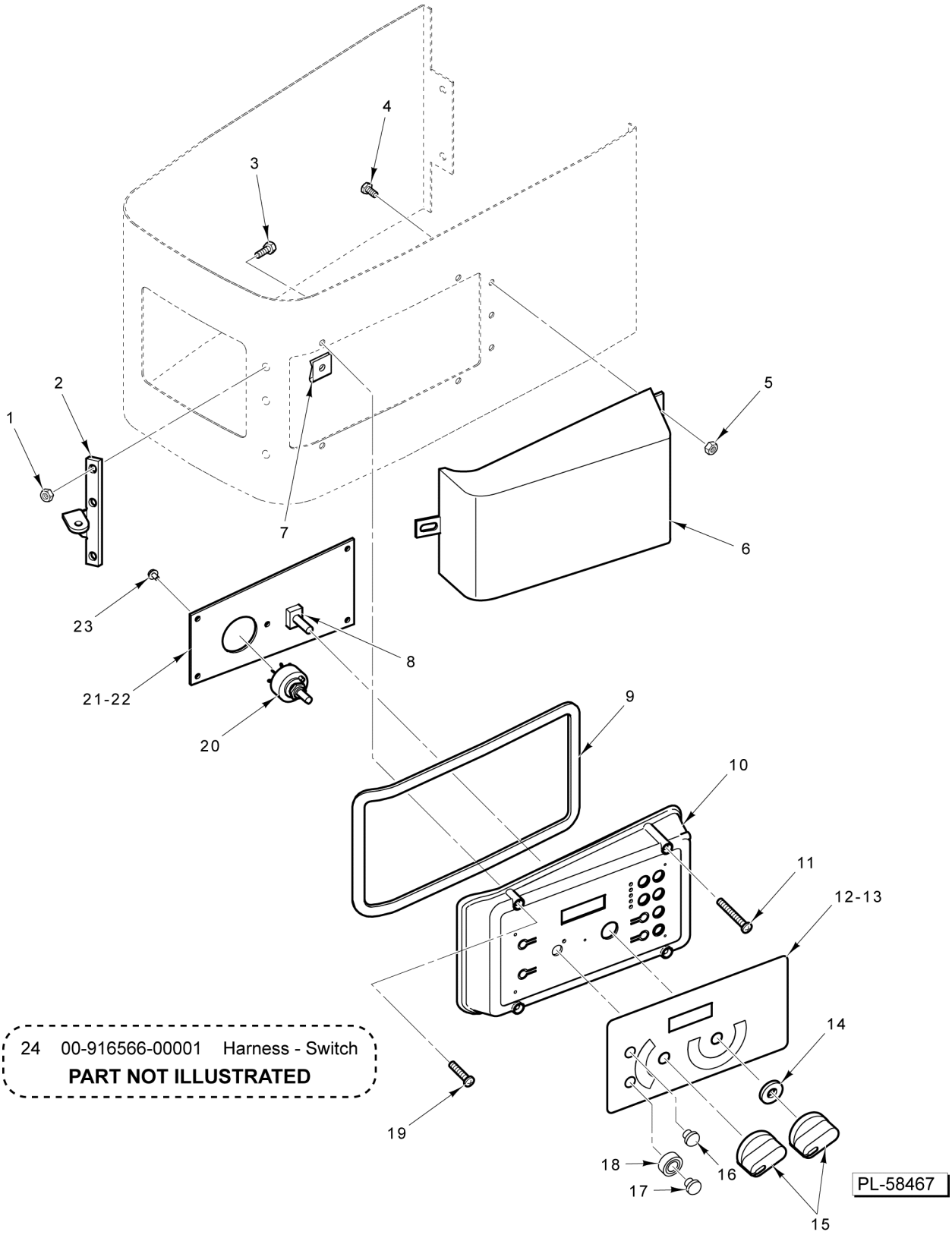

CONTROL PANEL

CONTROL PANEL

ILLUS. PL-58467	PART NO.	NAME OF PART	AMT.
1	NS-038-13	Lock Nut 10-24 Hex (ML-134359)	3
2	00-916759	Latch (ML-134359)	1
3	SC-128-69	Mach. Screw 10-24 x 3/8 Tx. Button Hd. (ML-134359)	3
4	SC-128-69	Mach. Screw 10-24 x 3/8 Tx. Button Hd. (ML-134359)	3
5	NS-038-13	Lock Nut 10-24 Hex (ML-134359)	3
6	00-916760	Cover - Security (ML-134359)	1
7	00-874338	Fastener - Self-Retaining	4
8	00-916594	Potentiometer Assy	1
9	00-916613	Seal - Control Panel	1
10	00-917226	Panel - Control	1
11	SC-128-40	Mach. Screw 8-32 x 2-1/4 Phil. Oval Hd. (SST)	2
12	00-916575	Overlay - Standard	1
13	00-916528	Overlay - Recipe	1
14	WS-031-55	Washer (Rubber)	1
15	00-874809	Knob (Plastic)	1
	00-938685	Knob (Metalic)	1
16	00-916592	Switch - Sealed Dome (Stop)	1
17	00-916593	Switch - Sealed Dome (Start)	1
18	00-916958-00002	Guard - Switch	1
19	SC-128-39	Mach. Screw 8-32 x 1-1/2 Phil. Oval Hd. (SST)	2
20	00-916923	Switch Assy. - Selector	1
21	00-916611	PCB Assy. (Standard)	1
22	00-916491	PCB Assy. (Recipe Timer)	1
23	SD-039-23	Self-Tapping Screw 6-32 x 1/4 Hex. Hex Washer Hd., Type RL	5
24	00-916566-00001	Harness - Switch	1

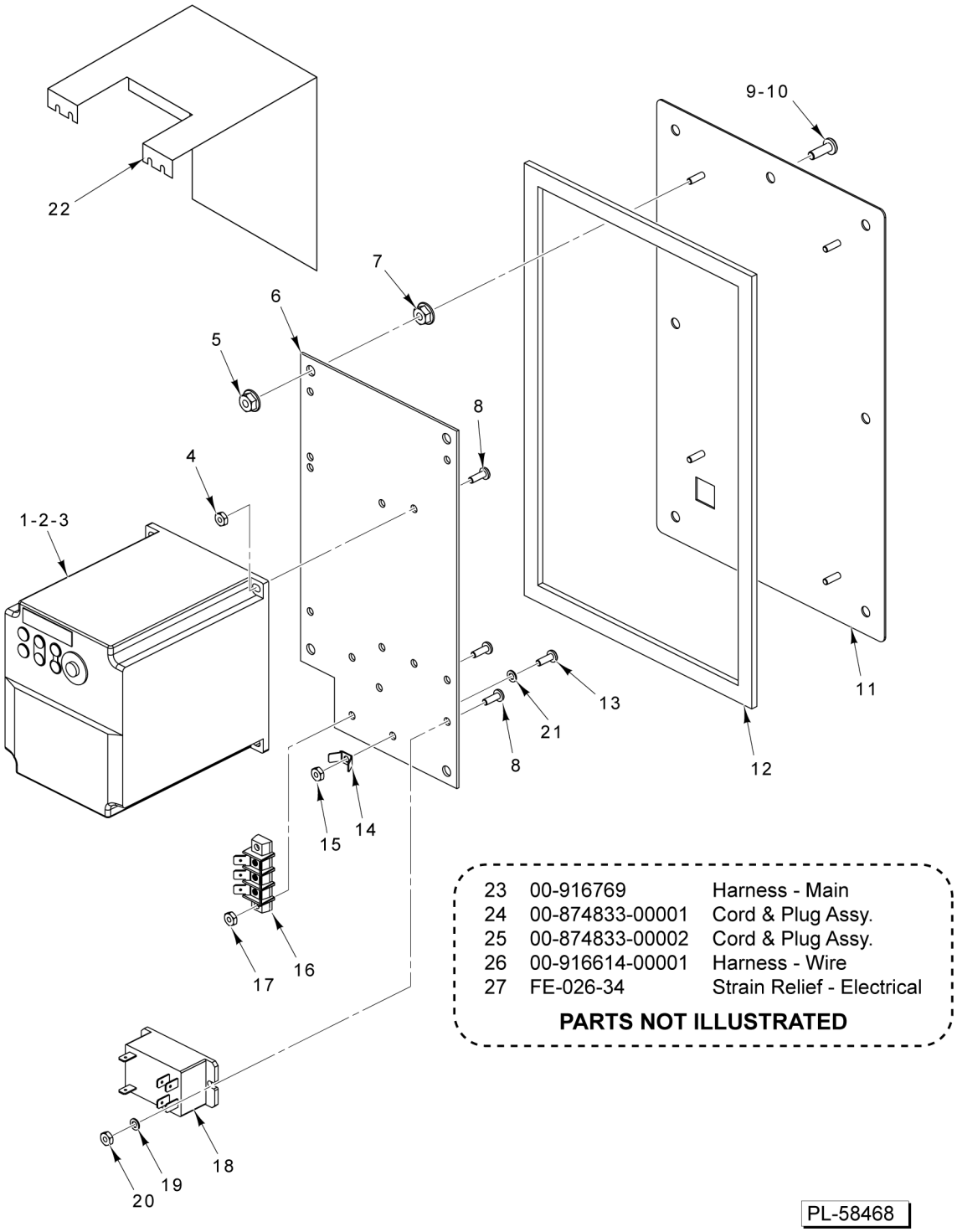

ELECTRICAL COMPONENTS

ELECTRICAL COMPONENTS

ILLUS. PL-58468	PART NO.	NAME OF PART	AMT.
1	00-916526-00001	Controller (200/230 V., 50/60 Hz., 1 Ph.)	1
2	00-916527-00001	Controller (200/230 V., 50/60 Hz., 3 Ph.)	1
3	00-916527-00002	Controller (380/480 V., 50/60 Hz., 3 Ph.)	1
4	NS-009-12	Nut 8-32 Hex	4
5	NS-038-04	Lock Nut 1/4-20 Flange	4
6	00-916871	Plate - Controller Mounting	1
7	NS-038-04	Lock Nut 1/4-20 Flange	4
8	SC-018-34	Mach. Screw 8-32 x 1/2 Phil. Pan Hd	8
9	SC-053-46	Mach. Screw 1/4-20 x 3/4 Slotted Truss Hd. (SST)	7
10	SC-128-74	Mach. Screw 1/4-20 x 5/8 Tx. Button Hd. (SST) (ML-134359)	7
11	00-916772-00002	Cover - Back & Studs	1
12		Foam - Tape (0.187 Thk. x 0.500 Wide) (Local Purchase)	AR
13	SC-018-33	Mach. Screw 8-32 x 5/16 Phil. Pan Hd	1
14	00-065890-00090	Terminal (2-Tab)	1
15	NS-009-12	Nut 8-32 Hex	1
16	00-916269	Block - Terminal	1
17	NS-009-12	Nut 8-32 Hex	2
18	00-087714-042-5	Relay (2-Pole, 30 Amp.)	1
19	WS-023-48	Washer	2
20	NS-009-12	Nut 8-32 Hex	2
21	WL-003-12	Lockwasher #8 Helical	1
22	00-938271	Shield - Mylar	1
23	00-916769	Harness - Main	1
24	00-874833-00001	Cord & Plug Assy. (120 V.)	1
25	00-874833-00002	Cord & Plug Assy. (220 V.)	1
26	00-916614-00001	Harness - Wire	1
27	FE-026-34	Strain Relief - Electrical	1

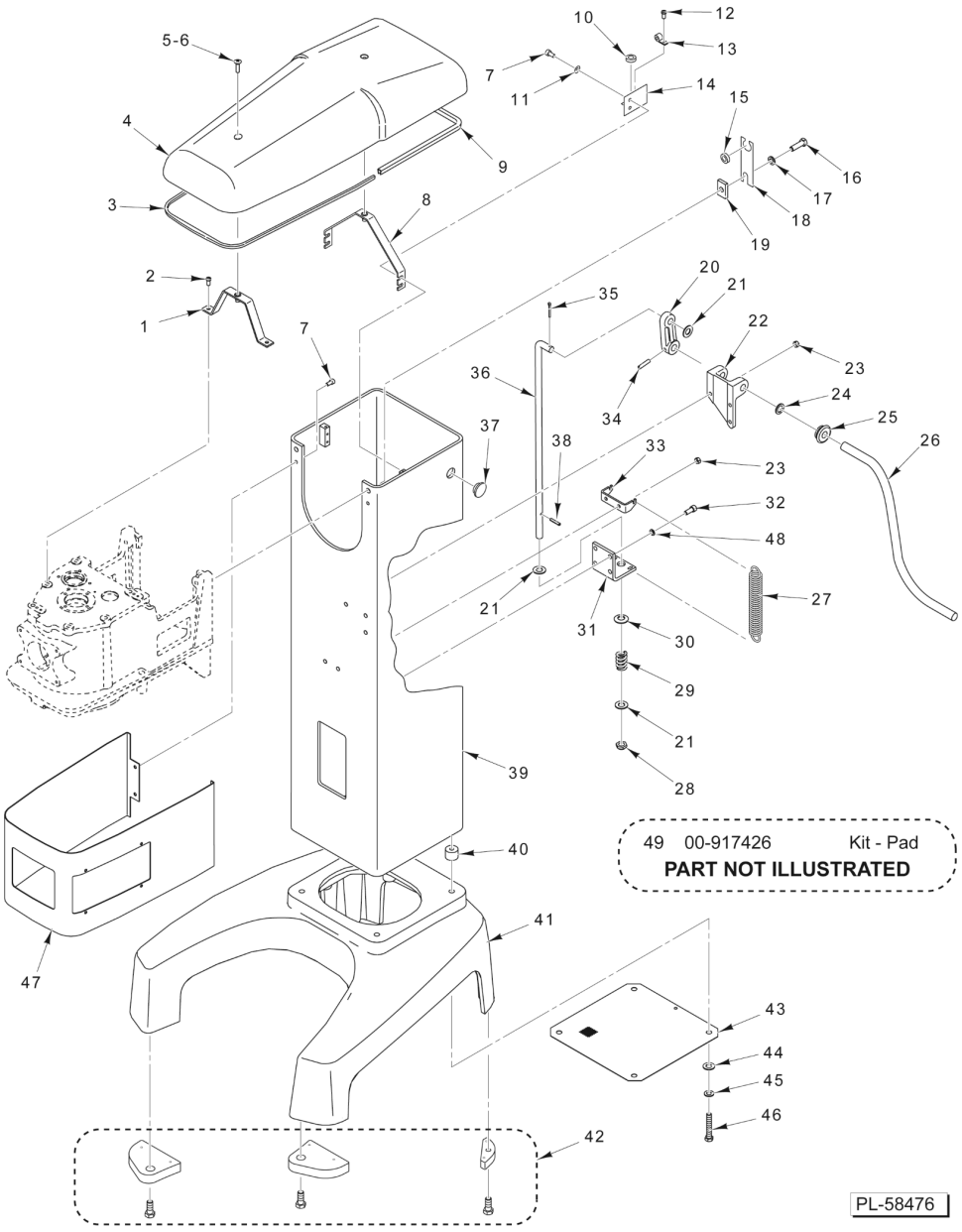

BASE AND PEDESTAL

BASE AND PEDESTAL

ILLUS. PL-58476	PART NO.	NAME OF PART	AMT.
1	00-916452	Strap - Front Cover Mounting	1
2	SC-089-19	Cap Screw 5/16-18 x 1-3/8 Hex Socket Hd	2
3	00-874512-00003	Seal - Top Cover	1
4	00-917230	Cover - Top	1
5	SC-024-03	Mach. Screw 1/4-20 x 7/8 Slotted Fil. Hd. (SST)	2
6	SC-121-73	Mach. Screw 1/4-20 x 1 Tx. Button Hd. (SST) (ML-134359)	2
7	SC-089-01	Cap Screw 1/4-20 x 1/2 Hex Socket Hd	6
8	00-916454	Strap - Rear Cover Mounting	1
9	00-916535-00001	Seal - Top Cover	1
10	FE-021-13	Bushing (Nylon) 1/2 I.D	1
11	WS-003-19	Washer	4
12	SD-019-23	Self-Tapping Screw 10-16 x 3/8 Phil. Pan Hd., Type B	1
13	00-078752-00009	Clamp - Cable	1
14	00-937123	Bracket	1
15	FE-021-13	Bushing (Nylon) 1/2 I.D	1
16	SC-118-09	Cap Screw 3/8-16 x 1-1/4 Hex Hd	6
17	WL-004-06	Lockwasher 3/8 Helical	6
18	00-916815	Plate - Wire Routing	1
19	00-271340	Bar - Reinforcing	6
20	00-916467	Arm - Bowl Lift	1
21	WS-008-47	Washer	3
22	00-916442	Block - Bowl Lift Bearing	1
23	NS-013-02	Nut 1/4-20 Hex	3
24	WS-020-01	Washer (SST)	1
25	00-271343	Grommet - Handle	1
26	00-916482	Handle - Bowl Lift	1
27	00-916463	Spring - Bowl Lift	2
28	NS-031-39	Stop Nut 1/2-20 Hex Elastic	1
29	00-070104	Spring - Bowl Lift	1
30	00-070131	Washer - Cup Bowl Lift	1
31	00-916469	Bracket - Bowl Lift Support	1
32	SC-041-13	Cap Screw 5/16-18 x 1 Hex Hd. (SST)	4
33	00-916449	Hook - Bowl Lift Spring	1
34	PS-004-15	Spiral Pin 1/4 Dia. x 1-1/8 Lg	1
35	PC-006-13	Cotter Pin	1
36	00-916468	Rod - Bowl Lift	1
37	PB-005-30	Plug - Button	1
38	RP-002-10	Roll Pin 3/16 Dia. x 1 Lg	1
39	00-916364-00004	Column	1
40	00-916508	Lug - Threaded Column	4
41	00-916213-00004	Base	1
42	00-916353	Kit - Foot Pad	1
43	00-916549	Screen - Air Floor	1
44	WS-018-19	Washer	4
45	WL-004-04	Lockwasher 3/8 Helical	4
46	SC-118-05	Cap Screw 3/8-16 x 2-3/4 Hex Hd	4
47	00-916387-00002	Wrapper - Transmission	1
48	WL-006-22	Lockwasher 5/16 Light (SST)	4
49	00-917426	Kit - Deck Plate Mounting	1

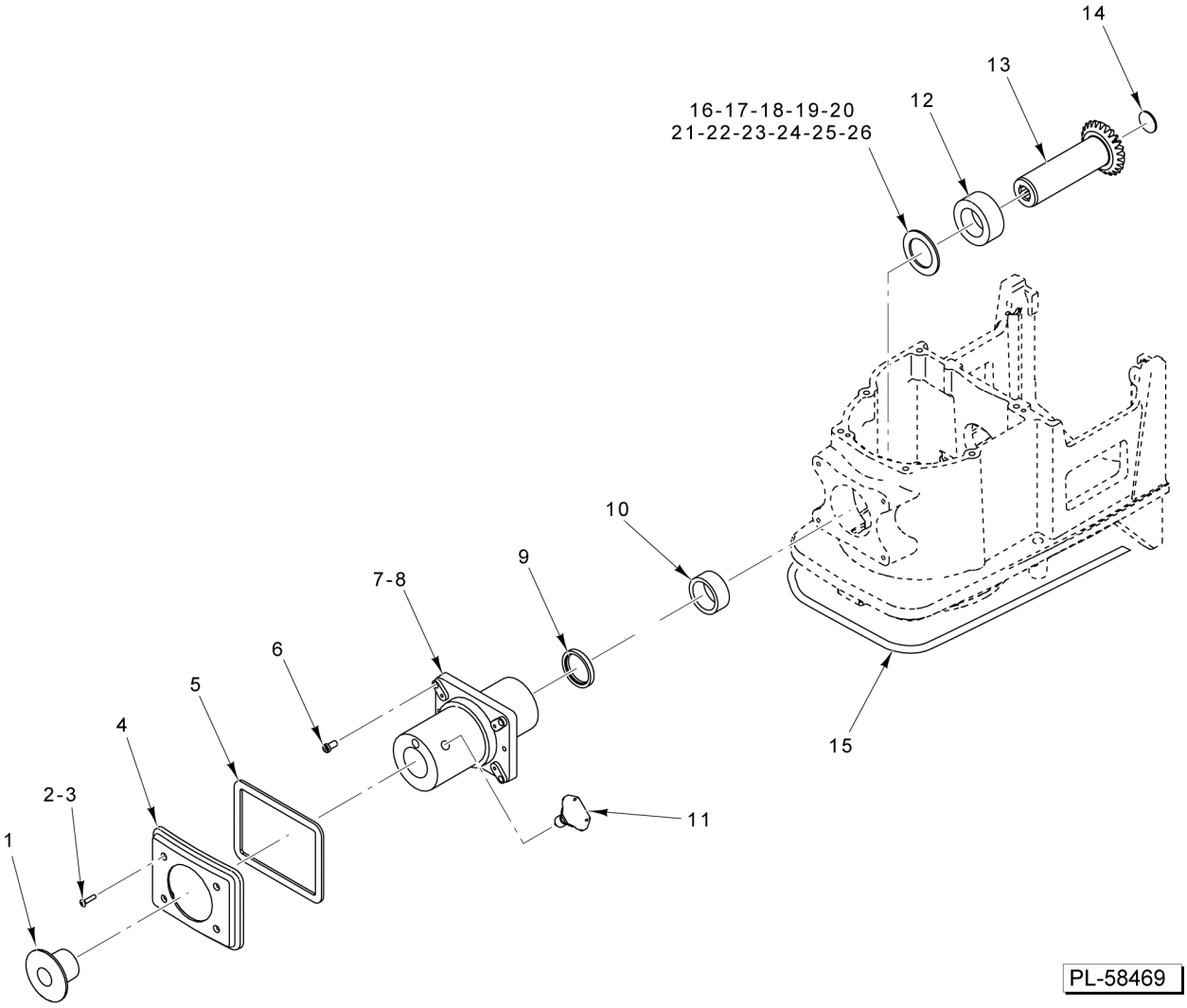

ATTACHMENT HUB

ATTACHMENT HUB

ILLUS. PL-58469	PART NO.	NAME OF PART	AMT.
1	00-917221	Plug - Attachment (Plastic)	1
	00-938670	Plug - Attachment (Metallic)	1
2	SC-079-04	Mach. Screw 8-32 x 3/4 Phil. Oval Hd. (SST)	4
3	SC-128-85	Mach. Screw 8-32 x 3/4 Tx. Flat Hd. (SST) (ML-134359)	4
4	00-917222	Panel - Front	1
5	00-875813	Seal - Front Cover	1
6	SC-040-09	Cap Screw 1/4-20 x 1-1/4 Hex Socket Hd	4
7	00-916384-00002	Hub - Attachment	1
8	OR-001-09	O-Ring	1
9	00-916733	Seal - Attachment Hub	1
10	BN-005-12	Bearing - Needle (Pre-Greased)	1
11	00-108197-00001	Thumb Screw 1-1/4	1
12	BB-013-03	Ball Bearing - Nice #618	1
13	00-916601	Gear - Drive Attachment (Incls. Item 14)	1
14	PL-003-17	Plug - Expansion	1
15	00-913102-00105	Kit - Seal	1
16	00-061920-00001	Washer - Thrust (0.076 Thk.)	AR
17	00-061920-00002	Washer - Thrust (0.079 Thk.)	AR
18	00-061920-00003	Washer - Thrust (0.082 Thk.)	AR
19	00-061920-00004	Washer - Thrust (0.085 Thk.)	AR
20	00-061920-00005	Washer - Thrust (0.088 Thk.)	AR
21	00-061920-00006	Washer - Thrust (0.091 Thk.)	AR
22	00-061920-00007	Washer - Thrust (0.094 Thk.)	AR
23	00-061920-00008	Washer - Thrust (0.097 Thk.)	AR
24	00-061920-00009	Washer - Thrust (0.100 Thk.)	AR
25	00-061920-00010	Washer - Thrust (0.103 Thk.)	AR
26	00-061920-00011	Washer - Thrust (0.106 Thk.)	AR

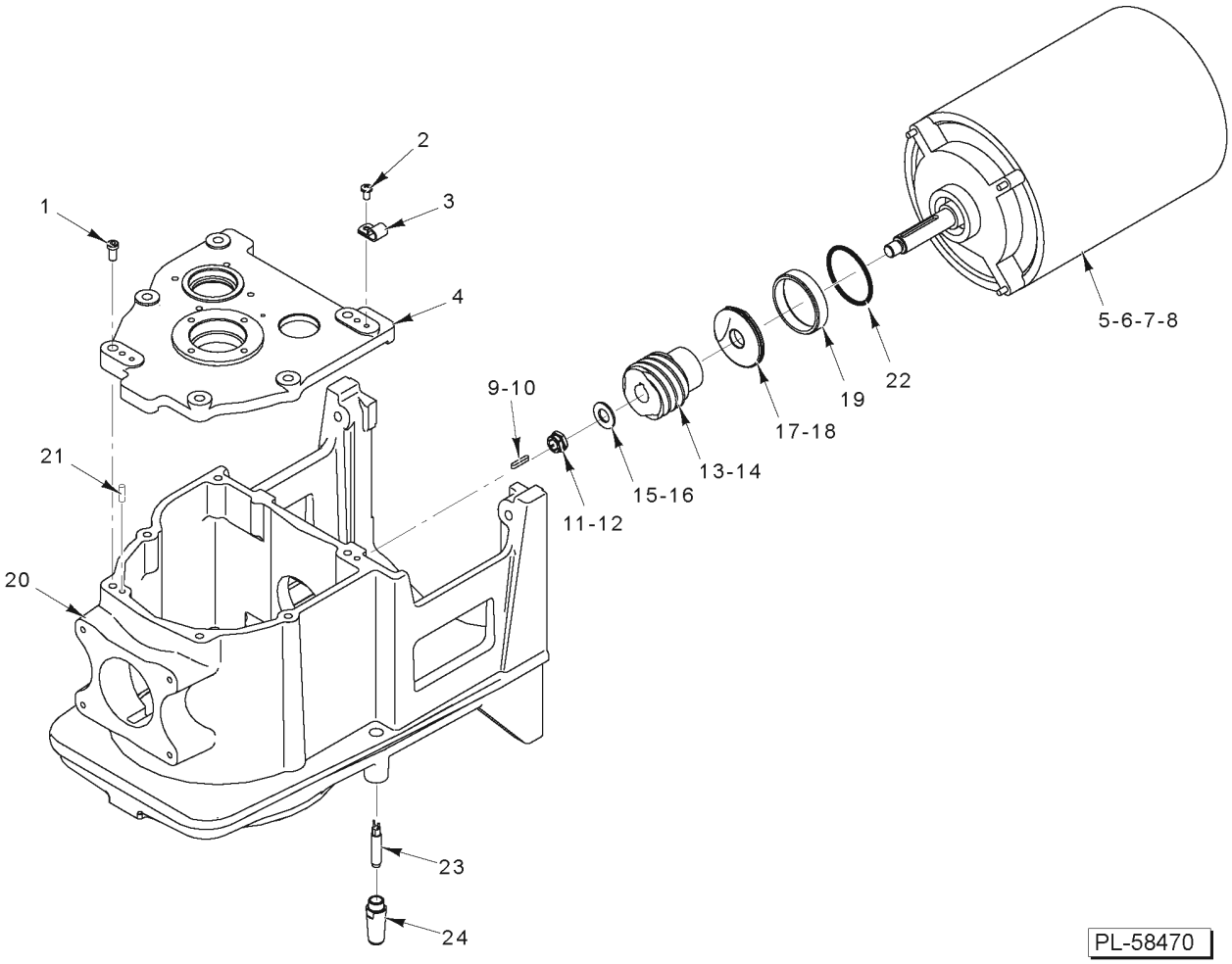

TRANSMISSION CASE AND MOTOR

TRANSMISSION CASE AND MOTOR

ILLUS. PL-58470	PART NO.	NAME OF PART	AMT.
1	SC-040-15	Cap Screw 5/16-18 x 1-1/4 Hex Socket Hd	6
2	SC-018-62	Mach. Screw 10-24 x 3/8 Phil. Pan Hd	1
3	00-078752-00003	Clamp - Cable	1
4	00-913102-00107	Cover - Top (Incls. Sleeve & Set Screw)	1
5	00-916447	Motor 5/8 Shaft (Discontinued. See Item 6)	1
6	00-913102-00109	Kit - Motor 15/16 Shaft	1
7	00-937120	Motor (All with 15/16 Shaft)	1
8	00-937123	Bracket	1
9	00-012430-00147	Key (5/8 Motor Shaft)	1
10	00-012430-00069	Key 3/16 x 3/16 x 1-39/64 (15/16 Motor Shaft)	1
11	NS-032-23	Lock Nut 7/16-20 Special (5/8 Motor Shaft)	1
12	NS-046-29	Lock Nut 3/4-16 Flexlox (15/16 Motor Shaft)	1
13	00-916338	Worm - Motor (5/8 Motor Shaft)	1
14	00-937119	Worm - Motor (15/16 Motor Shaft)	1
15	WS-021-08	Washer (5/8 Motor Shaft)	1
16	WS-012-41	Washer (0.797 x 1.125 x 0.062) (0.797 x 1.125 x 0.062)(15/16 Motor Shaft)	1
17	00-937535	Deflector - Grease (RH) (5/8 Motor Shaft)	1
18	00-937535-00002	Deflector - Grease (15/16 Motor Shaft)	1
19	00-939026	Kit, Deflector	1
20	00-916326-00004	Transmission	1
21	00-011800-00187	Dowel	2
22	00-067500-00057	O-Ring	1
23	00-087711-00352	Switch - Reed	1
24	00-917596	Holder - Reed Switch	1

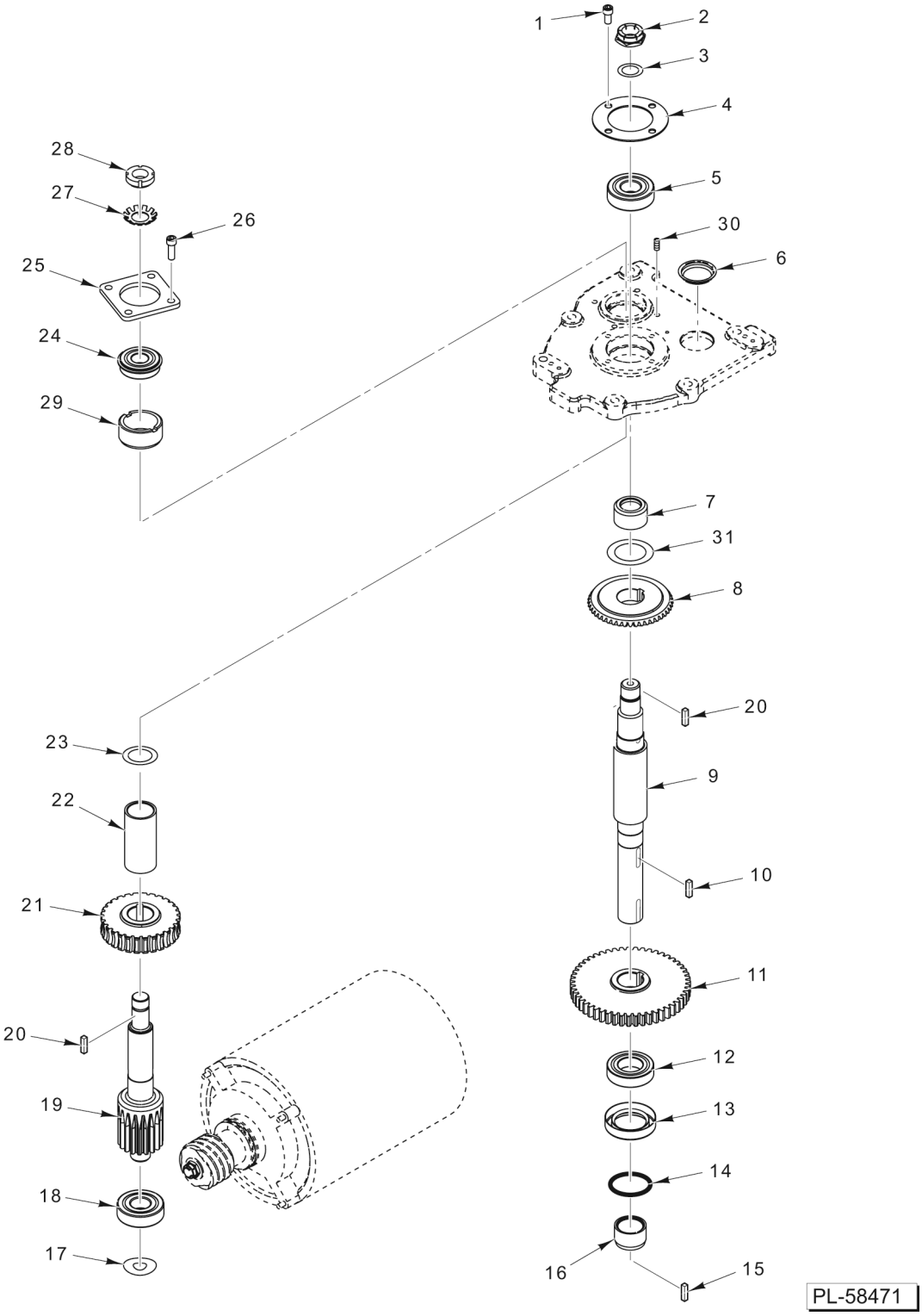

TRANSMISSION

TRANSMISSION

ILLUS. PL-58471	PART NO.	NAME OF PART	AMT.
1	SC-089-01	Cap Screw 1/4-20 x 1/2 Hex Socket Hd	4
2	NS-034-06	Lock Nut N.D. #N-05	1
3	WL-012-06	Lockwasher N.D. #W-05	1
4	00-916439	Retainer - Planetary	1
5	BB-017-39	Ball Bearing - MRC 205 SZZ-01-ST-A-92-C	1
6	00-064871	Plug - Friction	1
7	00-916356	Spacer - Upper Planetary	1
8	00-271234-00002	Gear - Planetary Shaft Bevel	1
9	00-916342	Shaft - Planetary	1
10	00-012430-00143	Key	1
11	00-916341	Gear - Helical (51T)	1
12	BB-015-36	Ball Bearing - Hoover - NSK 6007 DDUCE1SRIS	1
13	00-271341	Seal - Planetary Shaft Seal - Planetary	1
14	00-067500-00070	O-Ring	1
15	00-937370-00040	Key	1
16	00-437599	Seal - Hub	1
17	SL-005-04	Spring - Loading	1
18	BB-005-34	Ball Bearing	1
19	00-916340	Shaft - Worm Gear	1
20	00-012430-00138	Key 1/4 Sq. x 3/4 Lg	2
21	00-916339	Gear - Worm	1
22	00-916358	Spacer - Upper Input Shaft	1
23	00-916357	Spacer - Input Shaft	1
24	BB-021-21	Bearing - Ball	1
25	00-916438	Retainer - Wormwheel	1
26	SC-089-02	Cap Screw 1/4-20 x 3/4 Hex Socket Hd	4
27	WL-012-04	Lockwasher N.D. #W-03	1
28	NS-034-04	Lock Nut N.D. #N-03	1
29	00-271301-00002	Sleeve - Worm Gear Adjustment	1
30	SC-047-09	Set Screw 1/4-20 x 1/4 Hex Hdls., Cup Pt	1
31	00-060768	Shim - Internal Pinion	AR

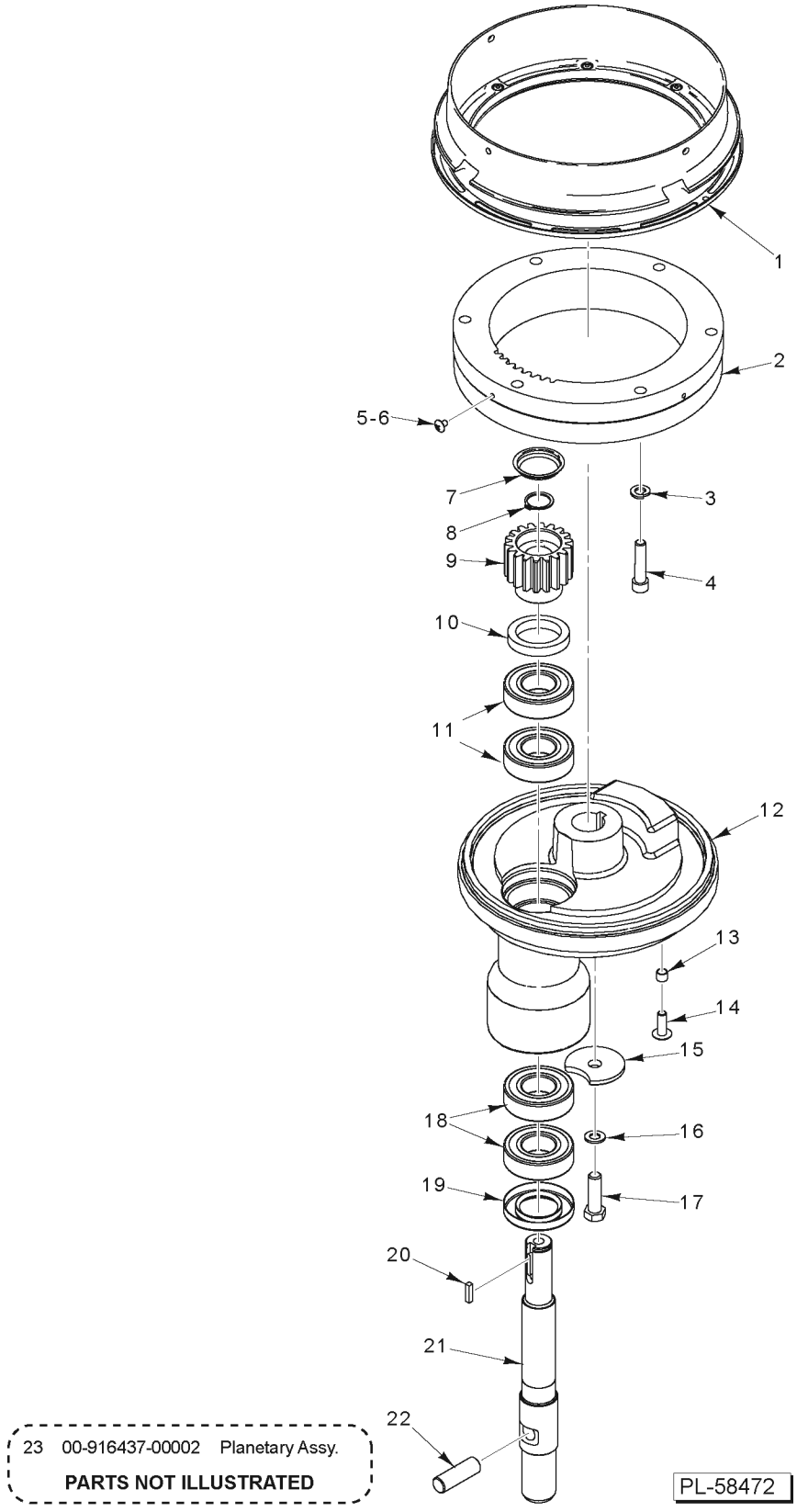
1
2
5-6
7
8
9
10
11
12
13
14
15
18
16
19
17
20
21
22
23 00-916437-00002 Planetary Assy.
PARTS NOT ILLUSTRATED
PL-58472

PLANETARY

PLANETARY

ILLUS. PL-58472	PART NO.	NAME OF PART	AMT.
1	00-917253	Drip Cup - Flange	1
2	00-916416-00001	Gear - Internal	1
3	WL-003-48	Lockwasher 5/16 High Collar	6
4	SC-089-19	Cap Screw 5/16-18 x 1-3/8 Hex Socket Hd	6
5	SC-066-13	Mach. Screw 8-32 x 1/4 Phil. Truss Hd. (SST)	3
6	SC-128-73	Mach. Screw 8-32 x 1/4 Tx. Button Hd. (SST) (ML-134359)	3
7	00-064871	Plug - Friction	1
8	RR-012-26	Retaining Ring	1
9	00-916444	Pinion - Planetary	1
10	00-916455	Seal - Planetary Upper	1
11	BB-017-39	Ball Bearing - MRC 205 SZZ-01-ST-A-92-C	2
12	00-916436	Planetary	1
13	00-874770	Spacer - Bowl Scraper	2
14	SC-053-46	Mach. Screw 1/4-20 x 3/4 Slotted Truss Hd. (SST)	2
15	00-070047-00001	Washer - Planetary	1
16	WL-006-28	Lockwasher 3/8 Helical (SST)	1
17	SC-062-58	Cap Screw 3/8-24 x 1-1/4 Hex Hd	1
18	BB-017-26	Ball Bearing - NSK #6206	2
19	00-439286	Seal - Agitator Shaft	1
20	00-012430-00149	Key	1
21	00-916458	Shaft - Agitator	1
22	00-070019	Pin - Agitator	1
23	00-916437-00002	Planetary Assy	1

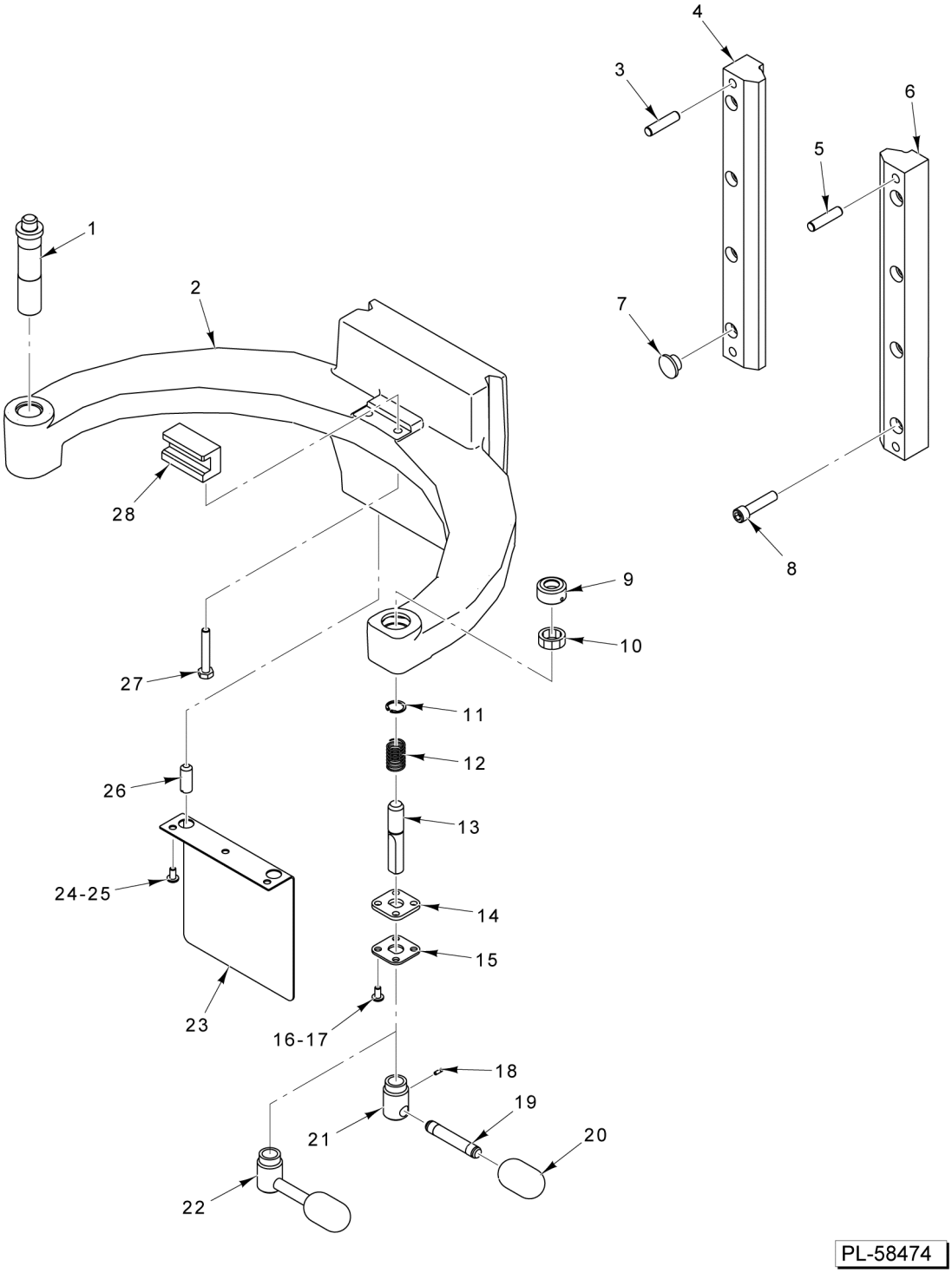

BOWL SUPPORT

BOWL SUPPORT

ILLUS. PL-58474	PART NO.	NAME OF PART	AMT.
1	00-916516	Pin - Bowl (LH)	1
2	00-916497	Support - Bowl	1
3	00-968081-00001	Dowel	2
4	00-916365-00001	Slideway - Bowl Lift (LH)	1
5	00-968081-00001	Dowel	2
6	00-916365-00002	Slideway - Bowl Lift (RH)	1
7	PB-004-96	Cap	8
8	SC-089-19	Cap Screw 5/16-18 x 1-3/8 Hex Socket Hd	8
9	00-916501	Ramp	1
10	00-916502	Bushing - Split	1
11	RR-012-30	Retaining Ring	1
12	00-916488	Spring - Compression	1
13	00-916505	Pin - Bowl (RH)	1
14	00-916550	Glide - Bowl Release	1
15	00-916506	Plate - Bowl Release	1
16	SC-093-23	Mach. Screw 10-24 x 3/8 Phil. Pan Hd. (SST)	3
17	SC-128-69	Mach. Screw 10-24 x 3/8 Tx. Button Hd. (ML-134359)	3
18	SC-047-74	Set Screw 8-32 x 1/4 Hex Hdls. Cup Pt	1
19	00-916552	Shaft - Bowl Pin Handle	1
20	00-875356	Handle - Lift Lever	1
21	00-916503	Block - Bowl Handle	1
22	00-916504-00002	Handle - Security Bowl Release (Correctional)	1
23	00-916470	Apron - Lower	1
24	SC-093-23	Mach. Screw 10-24 x 3/8 Phil. Pan Hd. (SST)	3
25	SC-128-69	Mach. Screw 10-24 x 3/8 Tx. Button Hd. (ML-134359)	3
26	SC-047-46	Set Screw 3/8-16 x 1-1/4 Hex Hdls., Half Dog Pt	2
27	SC-097-15	Cap Screw 1/4-20 x 1-5/8 Hex Hd	2
28	00-916515	Catch - Rear Bowl	1

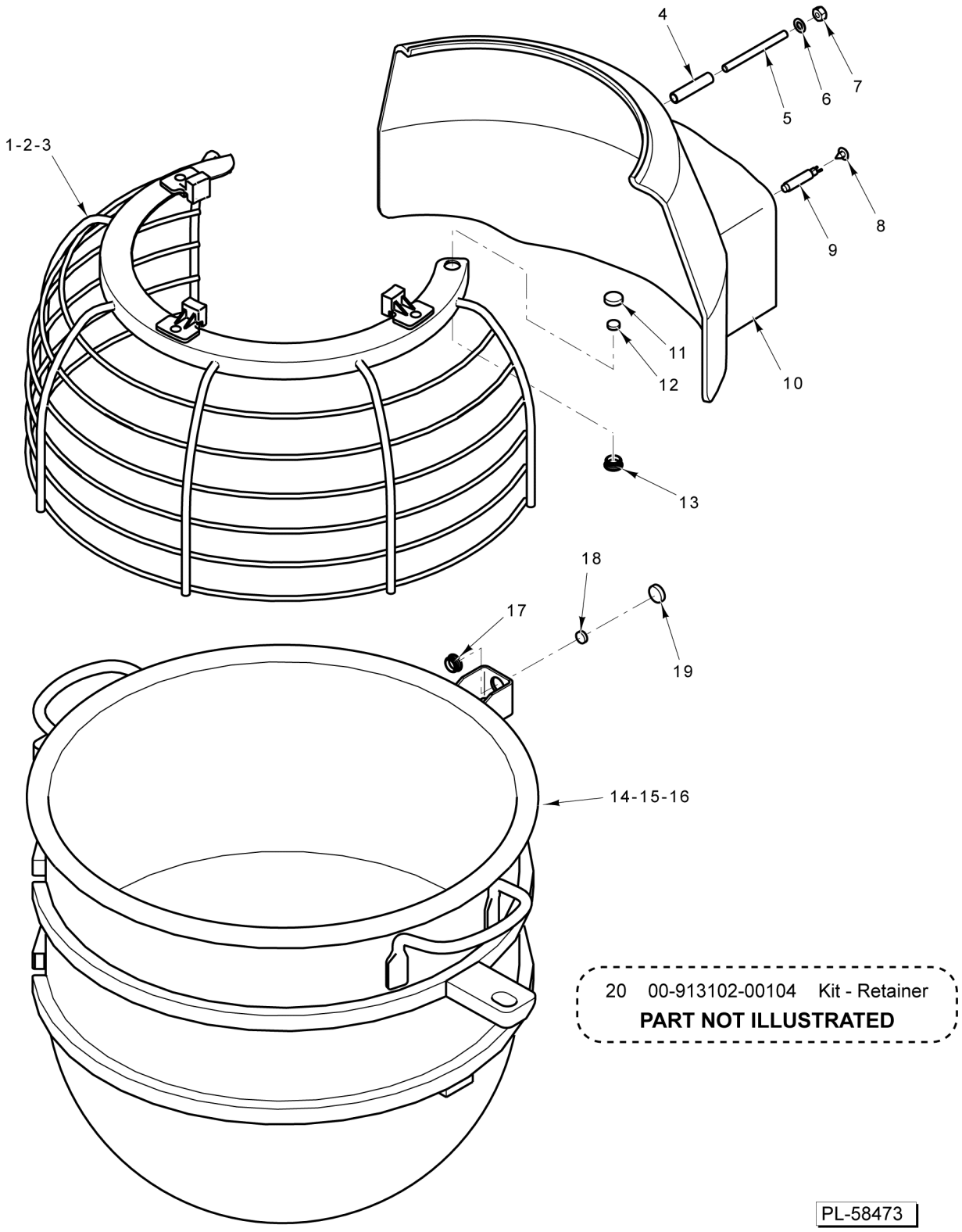

BOWL AND BOWL GUARD

BOWL AND BOWL GUARD

ILLUS. PL-58473	PART NO.	NAME OF PART	AMT.
1	00-937210-00001	Wire Cage Assy. (Incls. Items 11, 12, & 13)	1
2	00-937210-00002	Wire Cage Assy. (Incls. Items 11, 12, & 13) (ML-134359)	1
3	00-937210-00004	Wire Cage Assy. (Cheesecake Factory Only) (Incls. Items 11, 12, & 13)	1
4	00-916610	Spacer - Splash Guard	4
5	00-916671	Rod - Splash Guard	4
6	WS-003-19	Washer	8
7	NS-013-02	Nut 1/4-20 Hex	4
8	SD-034-19	Self-Tapping Screw 10-16 x 3/8 Phil. Truss Hd., Type AB	1
9	00-087711-00352	Switch - Reed	1
10	00-917228	Guard - Splash Back	1
11	00-917357	Holder - Magnet (Upper)	1
12	00-874875	Magnet - Disc	1
13	00-917358	Holder - Magnet (Lower)	1
14	00-916617	Bowl Assy. (20 Qt.) (Incls. Items 17, 18, & 19) (Packaged)	1
15	00-916616	Bowl Assy. (30 Qt.) (Incls. Items 17, 18, & 19) (Packaged)	1
16	00-916615	Bowl Assy. (40 Qt.) (Incls. Items 17, 18, & 19) (Packaged)	1
17	00-917358	Holder - Magnet (Lower)	1
18	00-874875	Magnet - Disc	1
19	00-917357	Holder - Magnet (Upper)	1
20	00-913102-00104	Kit - Retainer (Incls. Items 11, 12, & 13)	1

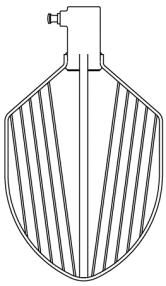

1

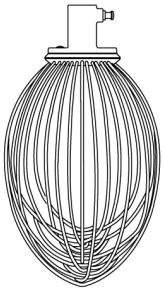

2

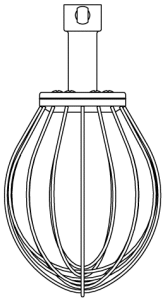

3

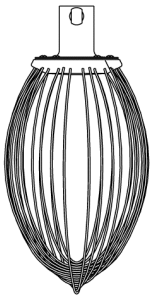

4

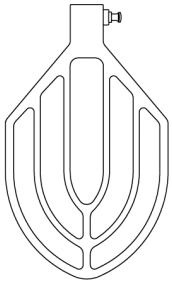

5

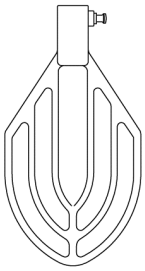

6



7-8-9

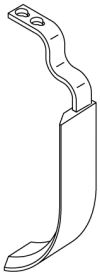

10-11

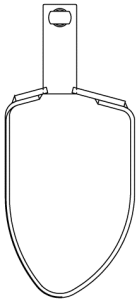

12

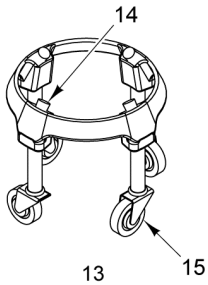

13

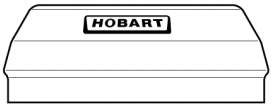

16-17

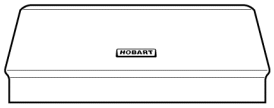

18

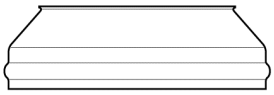

19

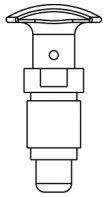

20

23	00-439096	Chute - Ingredient
24	00-917928	Chute - Ingredient

PARTS NOT ILLUSTRATED

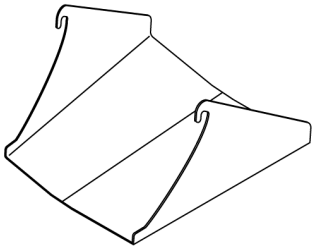

21

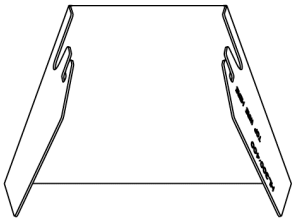

22

PL-58475

AGITATORS AND ACCESSORIES

AGITATORS AND ACCESSORIES

ILLUS. PL-58475	PART NO.	NAME OF PART	AMT.
1	00-916573	"C" Wire Whip (30 & 40 Qt.) (Packaged) (Incls. Item 20)	1
2	00-916598	"D" Wire Whip (20 Qt.) (Packaged) (Incls. Item 20)	1
3	00-916520	"I" Wire Whip (30 & 40 Qt.) (Packaged) (Incls. Item 20)	1
4	00-916421	"D" Wire Whip (30 & 40 Qt.) (Packaged) (Incls. Item 20)	1
5	00-916372	"B" Beater (30 & 40 Qt.) (Packaged) (Incls. Item 20)	1
6	00-916582	"B" Flat Beater (20 Qt.) (Packaged) (Incls. Item 20)	1
7	00-916827	"ED" Dough Arm (20 Qt.) (Packaged) (Incls. Item 20)	1
8	00-916618-00001	"ED" Hook (30 & 40 Qt.) (Packaged) (Incls. Item 20)	1
9	00-916618-00002	"ED" Hook (40 Qt.) (Packaged) (SST) (ML-134348) (Incls. Item 20)	1
10	00-916839	Bowl Scraper (40 Qt.) (Packaged) (Incls. Item 11)	1
11	00-435636-00003	Scraper - Bowl (40 Qt.)	1
12	00-916481	"P" Pastry Knife (30 & 40 Qt.) (Packaged) (Incls. Item 20)	1
13	00-916883	Bowl Truck Assy. (Incls. Items 14 & 15)	1
14	00-018682-00001	Foot	4
15	00-087668-00002	Caster	4
16	00-438079	Splash Cover (20 Qt.) (Lexan) (Packaged)	1
17	00-438080	Splash Cover (30 Qt.) (Lexan) (Packaged)	1
18	00-916897	Splash Cover (40 Qt.) (Lexan) (Packaged)	1
19	00-875677	Splash Cover (20 Qt.) (Packaged) (SST)	1
20	00-874753	Plunger Assy	AR
21	00-916684	Ingredient Chute (20 Qt.) (Packaged)	1
22	00-438607	Ingredient Chute (30 Qt.) (Packaged)	1
23	00-439096	Ingredient Chute (40 Qt.) (Packaged)	1
24	00-917928	Incredient Chute (HL300/HL400)	AR

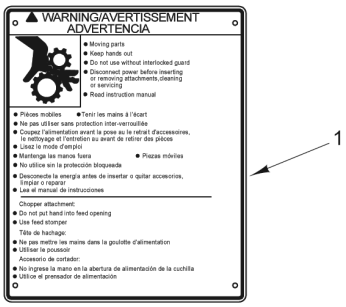



PL-65199

LABELS & NAMEPLATES

LABELS & NAMEPLATES

ILLUS. PL-PL-65199	PART NO.	NAME OF PART	AMT.
1	00-916957-00064	Label - Warning, Moving Parts (Trilingual)	1
2	00-938643	Label, Legacy "+" Medium (2.81" X .478")	1