CATALOG OF REPLACEMENT PARTS



B.) HL600 LEGACY SERIES MIXERS (Frequency Drive)

ML-134317	HL600
ML-134342	HL661
ML-134318	HL662
ML-134341	HL600c

A product of HOBART 701 S. RIDGE AVENUE TROY, OHIO 45374-0001

FORM 43129 Rev. E (October 2021)

 © HOBART 2021

Table of Contents

5 CONTROL PANEL COVER (ML-134341)
7 CONTROL PANEL
9 ELECTRICAL COMPONENTS
11 ATTACHMENT HUB
13 BASE AND PEDESTAL
15 BOWL SUPPORT
17 TRANSMISSION CASE AND MOTOR
19 TRANSMISSION
21 PLANETARY
23 BOWL GUARD
25 AGITATORS AND ACCESSORIES

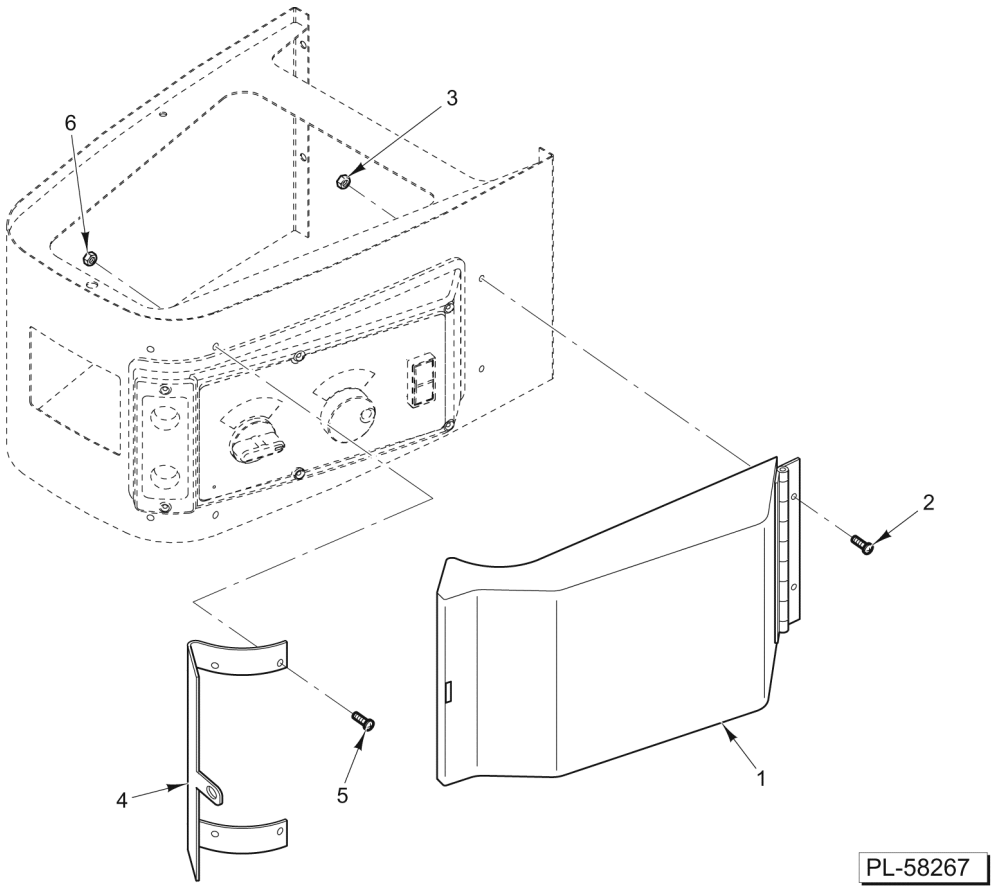

CONTROL PANEL COVER (ML-134341)

CONTROL PANEL COVER (ML-134341)

ILLUS. PL-58267	PART NO.	NAME OF PART	AMT.
1	00-874526	Cover Assy	1
2	SC-128-74	Mach. Screw 1/4-20 x 5/8 Tx. Button Hd. (SST)	2
3	NS-038-04	Lock Nut 1/4-20 Hex	2
4	00-874530	Hasp	1
5	SC-128-74	Mach. Screw 1/4-20 x 5/8 Tx. Button Hd. (SST)	4
6	NS-038-04	Lock Nut 1/4-20 Hex	4

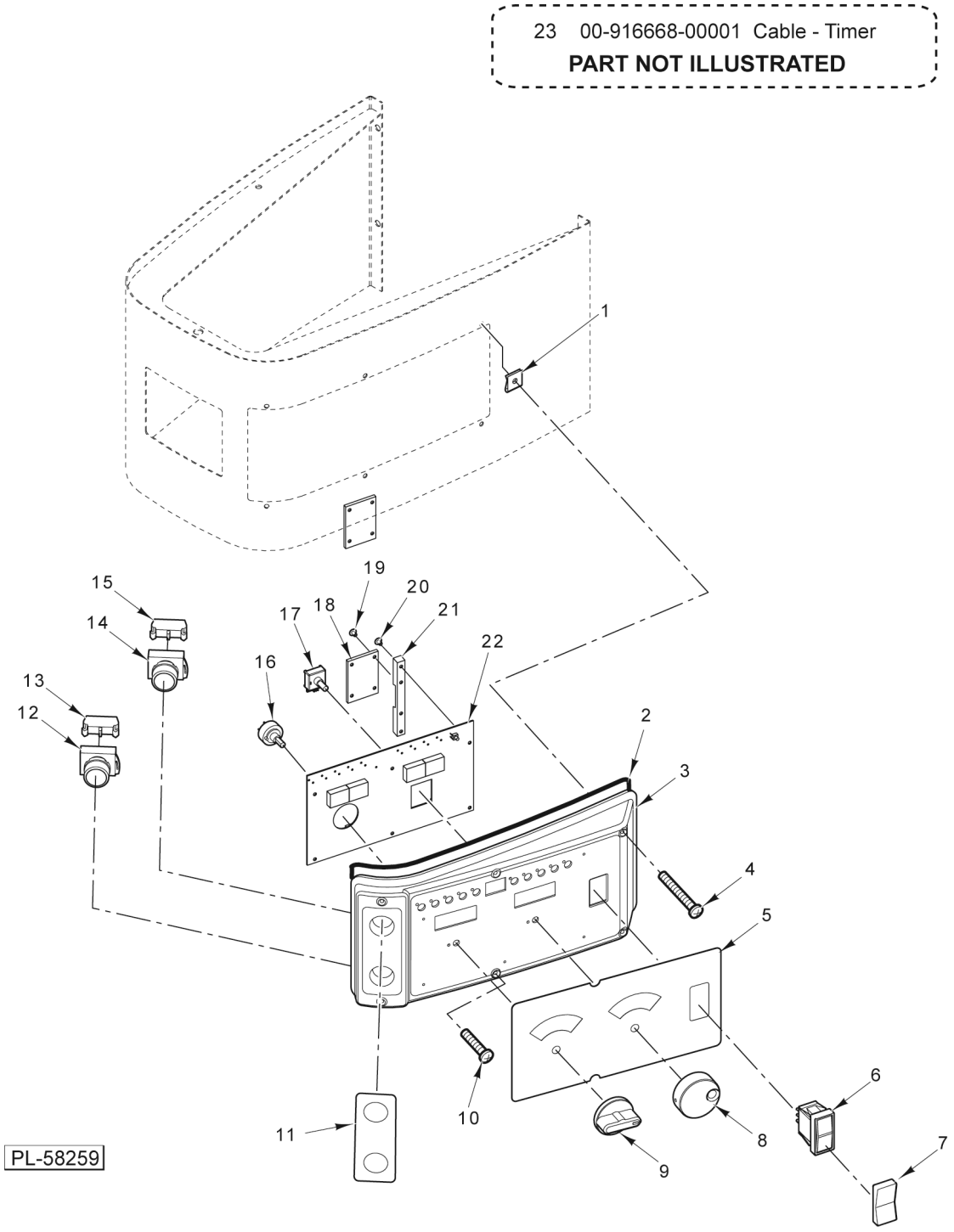

CONTROL PANEL

CONTROL PANEL

ILLUS. PL-58259	PART NO.	NAME OF PART	AMT.
1	00-874338	Fastener - Self-Retaining	6
2	00-875814	Seal - Control Panel	1
3	00-917220	Panel - Control	1
4	SC-128-40	Mach. Screw 8-32 x 21/4 Phil. Oval Hd. (SST)	2
	00-874468	Extension - Screw (ML-134341)	2
5	00-916231	Overlay (HL600) (Standard Timer)	1
	00-916232	Overlay (HL600) (Recipe Timer) (ML-134317)	1
	00-875568	Overlay (HL661) (ML-134342)	1
	00-875569	Overlay (HL662) (ML-134318)	1
6	00-087711-330-1	Switch - Rocker	1
7	00-937533	Switch Cover	1
8	00-875724	Knob - Timer	1
9	00-874630	Knob - Speed Selector	1
10	SC-128-39	Mach. Screw 8-32 x 11/2 Phil. Oval Hd. (SST)	4
	SC-128-84	Mach. Screw 8-32 x 11/2 Tx. Flat Hd. (SST) (ML-134341)	6
11	00-875451	Label (Mix/Stop)	1
12	00-478752-00002	Switch - Operator (Stop)	1
	00-478751-00001	Cap - Round Push Button (Extended)	1
13	00-087711-322-4	Block - Contact (Stop)	1
14	00-478752-00001	Switch - Operator (Start)	1
	00-478753-00001	Cap - Push Button (Start)	1
15	00-087711-322-3	Block - Contact (Start)	1
16	00-874631	Potentiometer Assy. (Speed Selector)	1
17	00-875723	Encoder Assy. (Time Selector)	1
18	00-916818	Interface - Circuit Board Assy	1
	00-916063	Bumper - Adhesive	2
19	SD-038-49	Self-Tapping Screw 6-32 x 1/2 Hex Washer Hd., Type RL	2
20	SD-039-23	Self-Tapping Screw 6-32 x 1/4 Hex Washer Hd., Type RL	6
21	00-916061	Block - Interface Mounting	1
22	00-916659	PCB Assy. (Recipe Timer) (ML-134317)	1
	00-916658	PCB Assy. (Standard Timer)	1
23	00-916668-00001	Cable - Timer	1

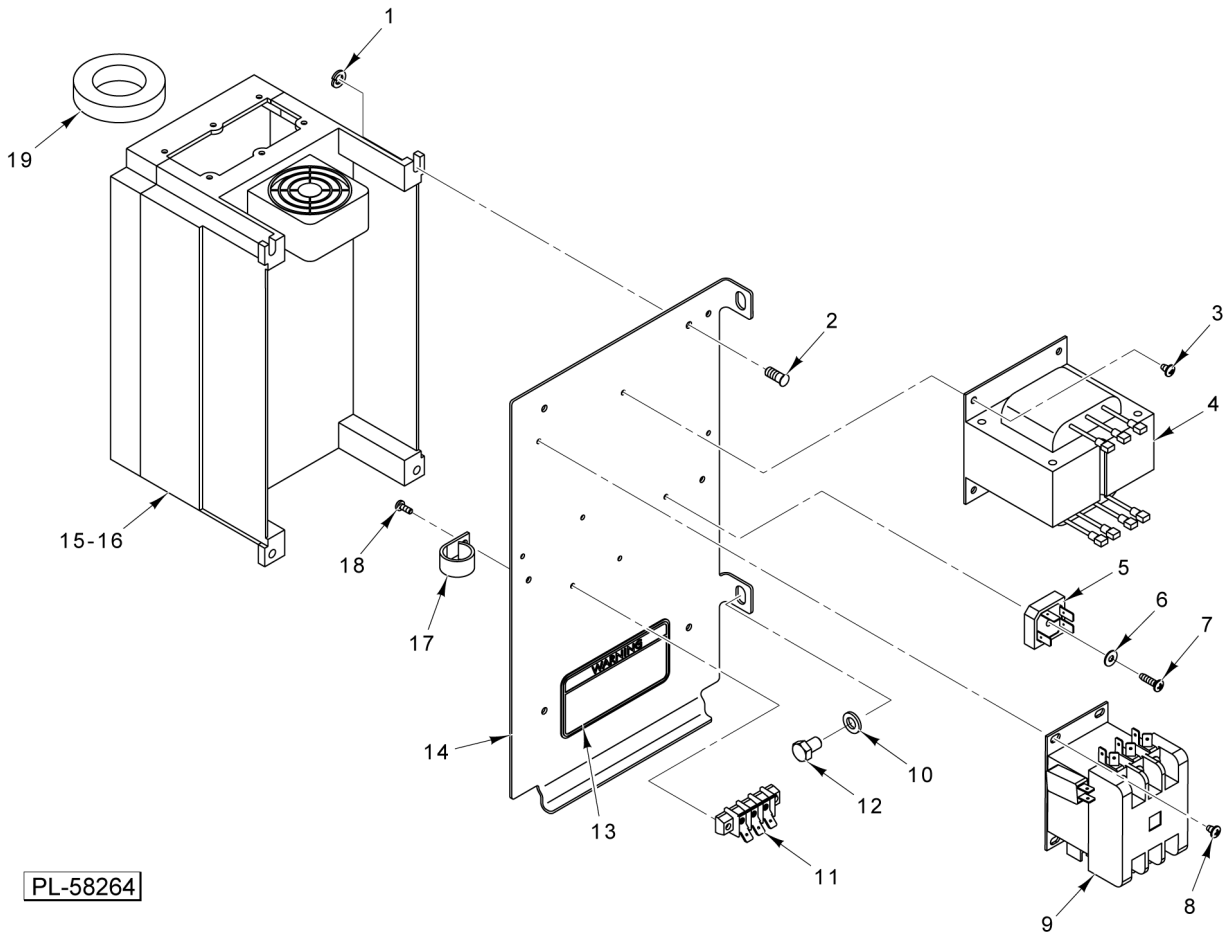

ELECTRICAL COMPONENTS

ELECTRICAL COMPONENTS

ILLUS. PL-58264	PART NO.	NAME OF PART	AMT.
1	WL-007-12	Lockwasher #10 External	4
2	00-113631-00043	Stud - Self-Clinching	4
3	SD-015-39	Self-Tapping Screw 8-32 x 1/4 Phil. Pan Hd., Type TT	2
4	00-294500-050-1	Transformer	1
5	00-042159	Rectifier - Bridge (100 V., 35 Amp.)	1
6	WS-019-41	Washer (SST)	1
7	SD-012-20	Self-Tapping Screw 8-32 x 1/2 Phil. Truss Hd., Type T	1
8	SD-015-39	Self-Tapping Screw 8-32 x 1/4 Phil. Pan Hd., Type TT	2
9	00-087713-101-3	Contactor (3P, 30 Amp./Aux.)	1
10	WL-003-44	Lockwasher 5/16 Helical	2
11	00-916269	Block - Terminal	1
12	SC-041-09	Cap Screw 5/16-18 x 1/2 Hex Hd. (SST)	2
13	00-438131-00174	Label - Warning	1
14	00-916577	Bracket - Mounting (GE Controller)	1
15	00-916390-00001	Drive - Variable Frequency (230 V.)	1
16	00-916390-00002	Drive - Variable Frequency (460 V.)	1
17	00-294677-00002	Clamp	2
18	SD-015-20	Self-Tapping Screw 10-32 x 3/8 Phil. Pan Hd., Type TT	2
19	00-916185-00001	Ferrite	1

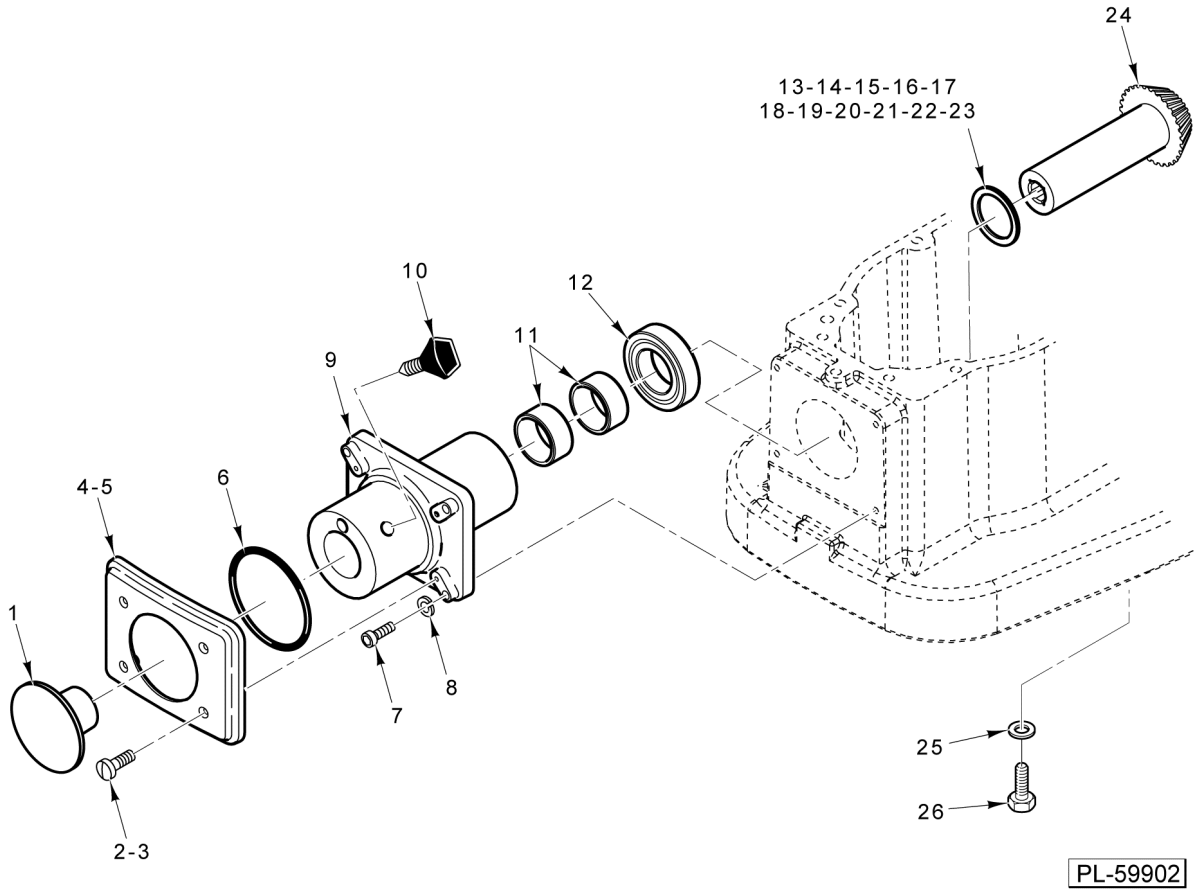

ATTACHMENT HUB

ATTACHMENT HUB

ILLUS. PL-59902	PART NO.	NAME OF PART	AMT.
1	00-917221	Plug - Attachment (Plastic)	1
	00-938670	Plug - Attachment (Metallic)(Starting S/N: 31-1622206)	1
2	SC-079-04	Mach. Screw 8-32 x 3/4 Phil. Oval Hd. (SST)	4
3	SC-128-85	Mach. Screw 8-32 x 3/4 Tx. Flat Hd. (SST) (ML-141069)	4
4	00-917222	Panel - Front	1
5	00-875813	Seal - Front Cover	1
6	OR-001-09	O-Ring	1
7	SD-036-13	Self-Tapping Screw 1/4-20 x 1-1/4 Hex Washer Hd., Type T	4
8	WL-003-38	Lockwasher 1/4 Helical	4
9	00-874290-00005	Hub - Attachment	1
10	00-108197-00001	Thumb Screw 1-1/4	1
11	BN-002-06	Bearing - Needle	2
12	BB-013-03	Ball Bearing - Nice #618	1
13	00-061920-00001	Washer - Thrust (0.076 Thk.)	AR
14	00-061920-00002	Washer - Thrust (0.079 Thk.)	AR
15	00-061920-00003	Washer - Thrust (0.082 Thk.)	AR
16	00-061920-00004	Washer - Thrust (0.085 Thk.)	AR
17	00-061920-00005	Washer - Thrust (0.088 Thk.)	AR
18	00-061920-00006	Washer - Thrust (0.091 Thk.)	AR
19	00-061920-00007	Washer - Thrust (0.094 Thk.)	AR
20	00-061920-00008	Washer - Thrust (0.097 Thk.)	AR
21	00-061920-00009	Washer - Thrust (0.100 Thk.)	AR
22	00-061920-00010	Washer - Thrust (0.103 Thk.)	AR
23	00-061920-00011	Washer - Thrust (0.106 Thk.)	AR
24	00-874277	Pinion - Bevel (24T)	1
25	WS-021-21	Washer 0.500 x 0.750 x 0.093 (Nylon)	1
26	SC-041-42	Cap Screw 1/2-20 x 1 Hex Hd. (SST)	1

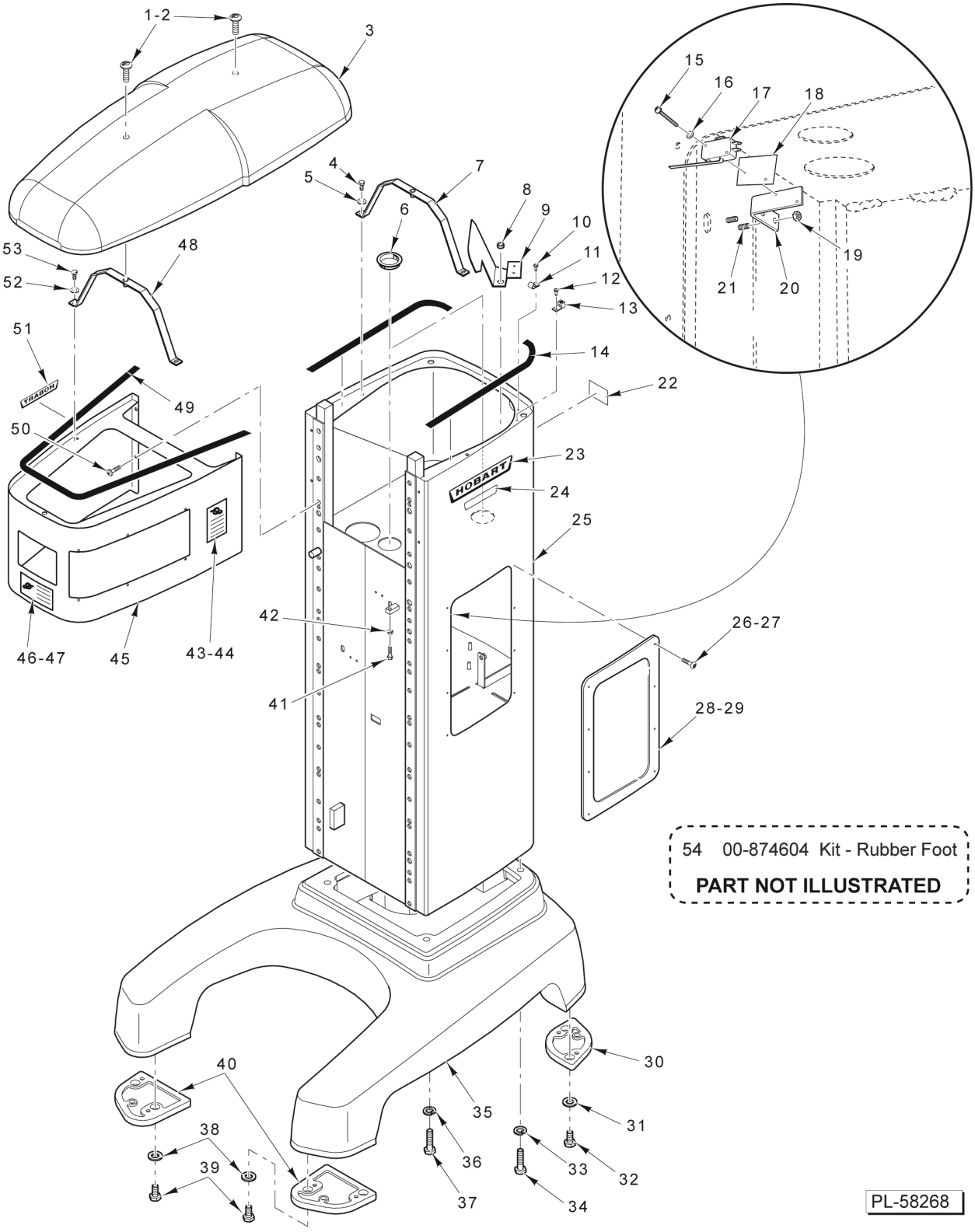

BASE AND PEDESTAL

BASE AND PEDESTAL

ILLUS. PL-58268	PART NO.	NAME OF PART	AMT.
1	SC-120-29	Mach. Screw 1/4-20 x 1 Phil. Oval Hd.	2
2	SC-128-63	Mach. Screw 1/4-20 x 2 Tx. Flat Hd. (SST) (ML-134341)	2
3	00-917437	Cover - Top	1
4	SC-036-06	Cap Screw 1/4-20 x 1 Hex Hd.	2
5	WS-003-43	Washer	2
6	FE-026-28	Bushing - Electric Snap	2
7	00-874222	Rear Strap Assy. - Rear	1
8	FE-021-13	Bushing - Electric Split	1
9	00-916173	Shield - Wire	1
10	SD-029-02	Self-Tapping Screw 10-24 x 1/2 Slotted Pan Hd., Type F	1
11	00-078752-00003	Clamp - Cable	1
12	SD-029-02	Self-Tapping Screw 10-24 x 1/2 Slotted Pan Hd., Type F	1
13	00-118544-00001	Lug - Solderless	1
14	00-874512-00001	Seal - Top Cover (Rear)	2
15	SC-060-40	Mach. Screw 4-40 x 5/8 Slotted Rd. Hd.	4
16	WL-003-03	Lockwasher #4 Helical	4
17	00-087711-00248	Switch - Bowl Height	2
18	00-439892	Insulator - Switch	2
19	NS-09-30	Nut 10-32 Hex	4
20	00-874109	Bracket - Bowl Travel Switch	2
21	00-113631-00040	Stud - Self-Clinching	4
22	00-438131-061-1	Label - Warning (California)	1
23	00-874401	Logo - Hobart	1
24	00-874379	Label - Legacy	1
25	00-916132-00002	Pedestal, Machining	1
26	SD-009-41	Self-Tapping Screw 8-32 x 3/8 Slotted Pan Hd., Type F (SST)	8
27	SC-128-66	Mach. Screw 8-32 x 1/2 Tx. Button Hd. (SST) (ML-134341)	8
28	00-874238-00001	Cover - Side (Incls. Item 29)	1
29	00-875815	Seal - Side Panel	2
30	00-874585	Foot - Rear	2
31	WS-006-36	Washer	4
32	SC-110-03	Cap Screw 3/8-16 x 3/4 Hex Socket Hd.	4
33	WL-004-11	Lockwasher 1/2 Helical	2
34	SC-062-83	Cap Screw 1/2-13 x 11/2 Hex Hd.	2
35	00-873950-002-1	Base	1
36	WL-004-11	Lockwasher 1/2 Helical	6
37	SC-128-47	Cap Screw 1/2-13 x 3 Hex Hd.	6
38	WS-006-36	Washer	4
39	SC-110-03	Cap Screw 3/8-16 x 3/4 Hex Socket Hd.	4
40	00-874152	Foot - Front	2
41	SC-041-13	Cap Screw 5/16-18 x 1 Hex Hd. (SST)	1
42	NS-013-14	Nut 5/16-18 Hex	1
43	00-438131-00001	Plate - Caution	1
44	RS-003-04	Rivet	1
45	00-916196	Wrapper Assy. (Transmission)	1
46	00-438131-00002	Plate - Warning	1
47	RS-003-04	Rivet	1
48	00-874223	Strap Assy. - Front	1
49	00-874512-00002	Seal - Top Cover	1
50	SD-039-06	Self-Tapping Screw 1/4-20 x 3/4 Hex Washer Hd., Type F	4
51	00-118365	Decal - Hobart	1
52	WS-003-43	Washer	2
53	SC-036-06	Cap Screw 1/4-20 x 1 Hex Hd.	2
54	00-874604	Kit - Rubber Foot	1

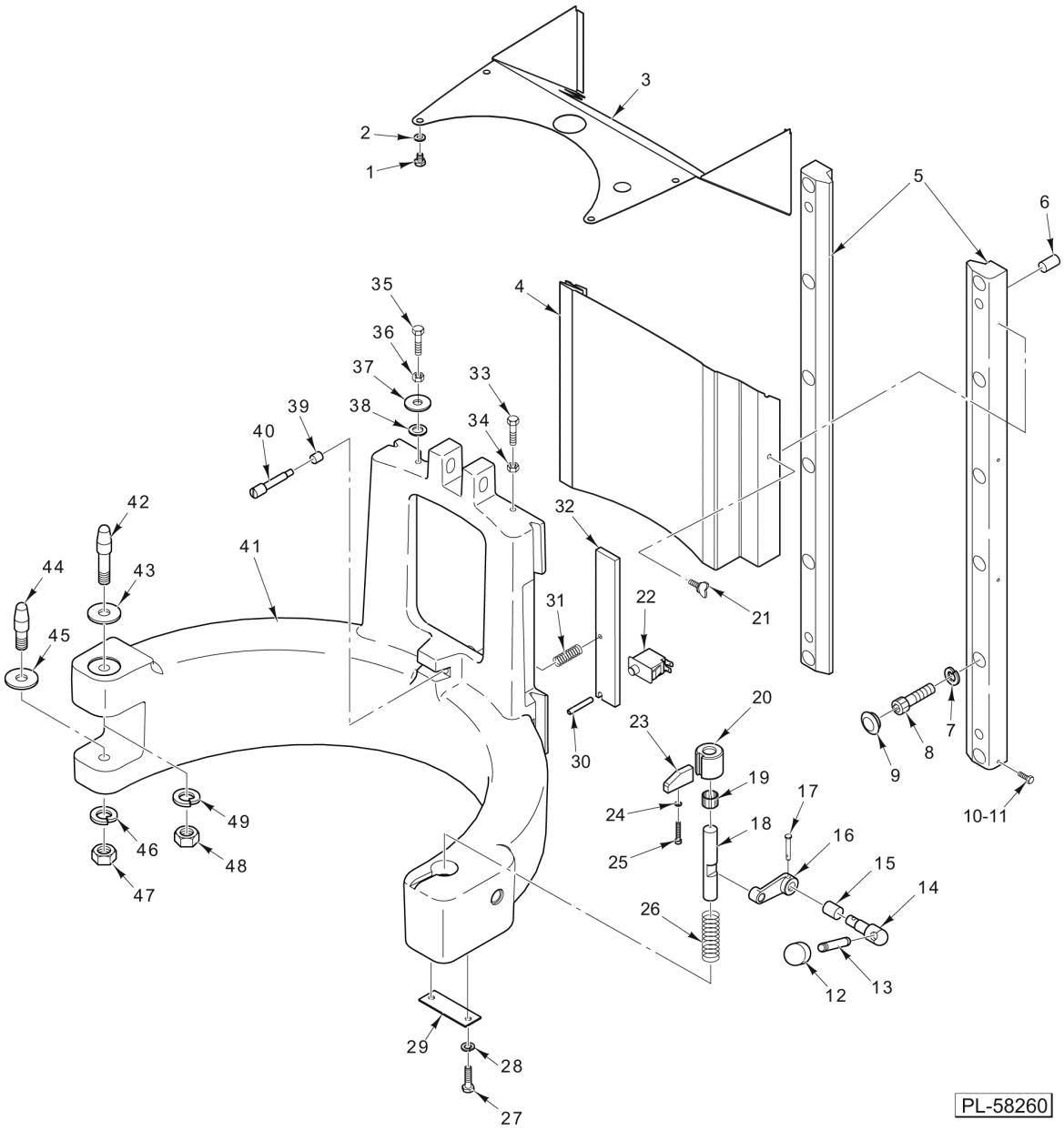

BOWL SUPPORT

BOWL SUPPORT

ILLUS. PL-58260	PART NO.	NAME OF PART	AMT.
1	SC-062-20	Cap Screw 1/4-20 x 3/8 Hex Hd	4
2	WL-003-38	Lockwasher 1/4 Helical	4
3	00-916378	Cover - Upper Apron	1
4	00-916379	Apron - Lower	1
5	00-873885	Slideway	2
6	00-011800-00264	Dowel	2
7	WL-004-02	Lockwasher 3/8 Helical	12
8	SC-092-62	Cap Screw 3/8-16 x 11/2 Hex Soc. Hd	12
9	PB-004-90	Cap	12
10	SC-128-48	Mach. Screw 10-24 x 1/4 Hex Hd	6
11	SC-128-69	Mach. Screw 10-24 x 3/8 Tx. Button Hd. (ML-134341)	8
12	00-875356	Handle - Lift Lever	1
13	00-874197	Shaft - Bowl Pin Handle	1
14	00-874220	Handle - Bowl Pin	1
15	00-874138	Bushing - Bowl Pin Cam	1
16	00-874218	Clevis - Bowl Lock	1
17	00-874388	Detent - Clevis Pin	1
18	00-874219	Pin - Bowl (RH)	1
19	00-874499	Bushing - Bowl Lock Pin	1
20	00-874506	Button - Rest Bowl	1
21	00-070641-00009	Thumb Screw (All Except ML-134341)	2
22	00-087711-00338	Switch - Panel Front	1
23	00-874113	Ramp - Wear	1
24	WL-003-12	Washer	1
25	SC-040-92	Cap Screw 8-32 x 1 Hex Socket Hd	1
26	00-874198	Spring - Bowl Pin	1
27	SC-036-14	Cap Screw 1/4-20 x 1/2 Hex Hd	2
28	WL-003-38	Lockwasher 1/4 Helical	2
29	00-874199	Strap - Spring Retaining	1
30	RP-005-12	Roll Pin 0.187 x 1.250 Lg	1
31	00-874496	Spring - Pushplate	1
32	00-874464	Plate - Push	1
33	SC-041-13	Cap Screw 5/16-18 x 1 Hex Hd. (SST)	1
34	NS-013-14	Nut 5/16-18 Hex	1
35	SC-041-13	Cap Screw 5/16-18 x 1 Hex Hd. (SST)	1
36	NS-013-14	Nut 5/16-18 Hex	1
37	WS-005-33	Washer (SST)	1
38	WS-006-36	Washer	3
39	00-874492	Bushing - Bowl-In	1
40	00-874458	Plunger - Bowl-In	1
41	00-873844-00003	Yoke	1
42	00-873845	Pin - Bowl	1
43	00-874084	Bushing - Bowl Support	1
44	00-873846	Pin - Bowl	1
45	00-874084	Bushing - Bowl Support	1
46	WL-004-12	Lockwasher 1/2 Helical	1
47	NS-013-30	Nut 1/2-13 Hex	1
48	NS-013-30	Nut 1/2-13 Hex	1
49	WL-004-12	Lockwasher 1/2 Helical	1
	00-874139-00002	Bowl Lock Handle Assy. (Welded) (ML-134341)	1

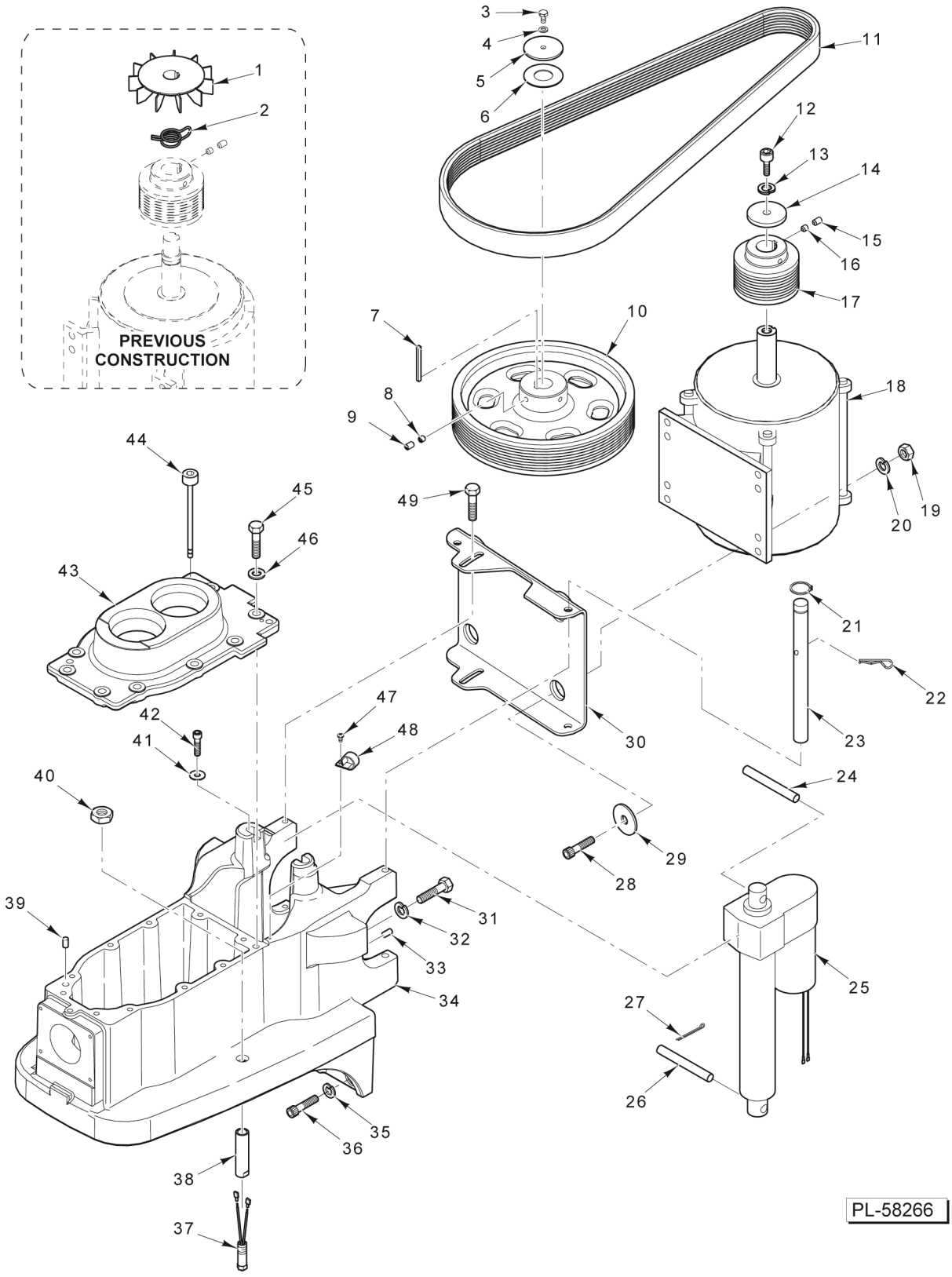

TRANSMISSION CASE AND MOTOR

TRANSMISSION CASE AND MOTOR

ILLUS. PL-58266	PART NO.	NAME OF PART	AMT.
1	00-916530	Fan - Cooling	1
2	00-916531	Clamp	1
3	SC-036-14	Cap Screw 1/4-20 x 1/2 Hex Hd	1
	SC-121-72	Mach. Screw 1/4-20 x 1/2 Tx. Button Hd. (ML-134341)	1
4	WL-003-38	Lockwasher 1/4 Helical	1
5	00-874345-00003	Washer - Special	1
6	00-874345-00004	Washer - Special	1
7	00-012430-00177	Key 1/4 x 1/4 x 21/2	1
8	SC-047-31	Set Screw 5/16-18 x 5/16 Hex Hdls., Cup Pt	2
9	SC-047-34	Set Screw 5/16-18 x 1/2 Hex Hdls., Cup Pt	2
10	00-874000	Sheave - Driven	1
11	00-873921-00002	Belt	1
12	SC-118-69	Cap Screw M8 x 11/4 x 16mm Hex Socket Hd	1
13	WL-020-13	Lockwasher M8 Helical	1
14	00-874345-00006	Washer (Special)	1
15	SC-047-34	Set Screw 5/16-18 x 1/2 Hex Hdls., Cup Pt	2
16	SC-047-31	Set Screw 5/16-18 x 5/16 Hex Hdls., Cup Pt	2
17	00-873999	Sheave - Drive	1
18	00-917676	Motor - 3 Hp	1
19	NS-013-22	Nut 3/8-16 Hex	4
	00-012430-00163	Key 1/4 x 1/4 x 1 3/4	1
20	WL-004-06	Lockwasher 3/8 Helical	4
21	RR-004-19	Retaining Ring	2
22	00-874241	Pin - Pivot Motor Bracket	1
23	00-874315	Pin - Actuator (Upper)	1
24	00-874057	Actuator (Bowl Lift)	1
25	00-874117	Pin - Clevis	1
26	PC-003-50	Cotter Pin 7/64 x 1 Lg	1
27	SC-040-23	Cap Screw 3/8-16 x 11/4 Hex Soc. Hd	4
28	WS-006-36	Washer	4
29	00-916331	Plate - Mounting	1
30	SC-062-67	Cap Screw 1/2-13 x 21/4 Hex Hd	2
31	WL-004-11	Lockwasher 1/2 Helical	2
32	00-011800-00221	Dowel	2
33	00-873996-00003	Case - Transmission	1
34	WL-004-11	Lockwasher 1/2 Helical	2
35	SC-040-36	Cap Screw 1/2-13 x 13/4 Soc. Hex Hd	2
36	00-874958-00001	Switch - Reed & Extension	1
37	00-874128	Extension - Bowl Guard Switch (Bowl Guard)	1
38	00-011800-00224	Dowel	2
39	NS-017-46	Jam Nut 3/4-10 Hex	1
40	WS-006-36	Washer	2
41	SC-040-16	Cap Screw 5/16-18 x 1 Hex Soc. Hd	2
42	00-873916-00002	Cover - Transmission	1
43	00-874131	Dipstick	1
44	SC-062-48	Cap Screw 3/8-16 x 11/8 Hex Hd	10
45	WL-004-04	Lockwasher 3/8 Helical	10
46	SC-018-62	Mach. Screw 10-24 x 3/8	1
47	00-294677-00003	Clamp	1
48	SC-123-50	Cap Screw 3/8-16 x 1 Hex Washer Hd	2
	00-916734-00001	Harness - Wiring	1

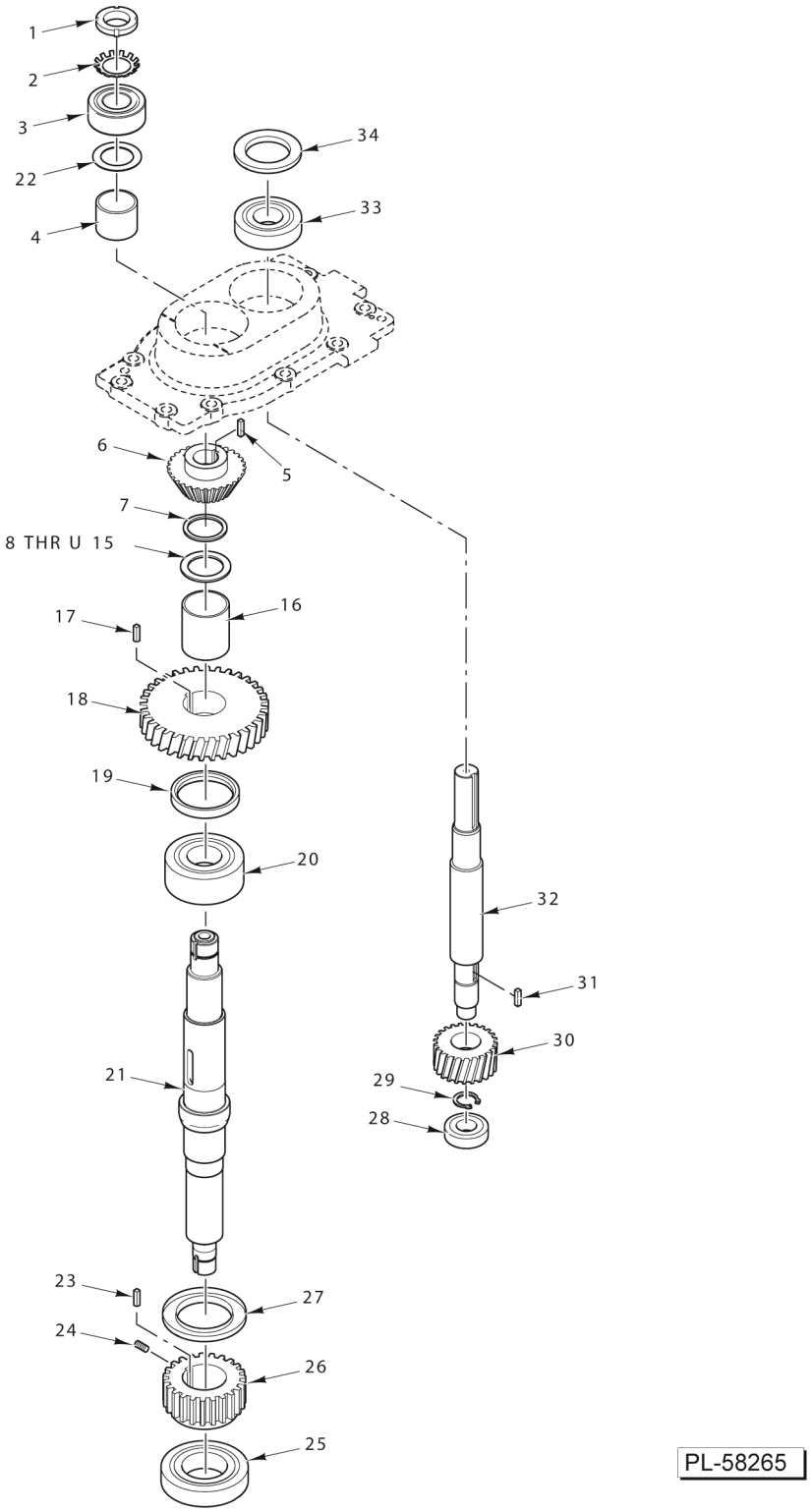

TRANSMISSION

TRANSMISSION

ILLUS. PL-58265	PART NO.	NAME OF PART	AMT.
1	NS-034-07	Lock Nut	1
2	WL-017-07	Lockwasher - Bearing 1.500 x 1.953	1
3	BB-021-35	Ball Bearing (SKF-5206 A-2RS/C3/HT51)	1
4	00-874293	Spacer (1.505 I.D.)	1
5	00-875419-00071	Key 5/16 x 5/16 x 15/8	1
6	00-874282	Gear - Bevel (30T)	1
7	00-874384	Spacer - Gear	1
8	00-874283-00001	Shim - Gear (0.066 Thk.)	AR
9	00-874283-00002	Shim - Gear (0.072 Thk.)	AR
10	00-874283-00004	Shim - Gear (0.084 Thk.)	AR
11	00-874283-00005	Shim - Gear (0.090 Thk.)	AR
12	00-874283-00006	Shim - Gear (0.096 Thk.)	AR
13	00-874283-00007	Shim - Gear (0.102 Thk.)	AR
14	00-874283-00008	Shim - Gear (0.108 Thk.)	AR
15	00-874283-00009	Shim - Gear (0.116 Thk.)	AR
16	00-874294	Spacer (1.755 I.D.)	1
17	00-875419-00075	Key 5/16 x 5/16 x 1-1/16	1
18	00-873914	Gear - Drive	1
19	00-873922	Spacer - Planetary Shaft	1
20	BB-009-30	Ball Bearing	1
21	00-875915	Shaft - Planetary	1
22	00-875909	Spacer	1
23	00-875419-00075	Key 5/16 x 5/16 x 1-1/16	1
24	SC-047-12	Set Screw 1/4-20 x 3/8 Socket Hdls., Knife Cup Pt	1
25	BB-021-58	Ball Bearing	1
26	00-873912	Gear - Sun	1
27	00-873939	Seal	1
28	BB-007-14	Ball Bearing	1
29	RR-009-07	Retaining Ring	1
30	00-873915	Gear - Pinion	1
31	00-012430-00048	Key 3/16 x 3/16 x 3/4	1
32	00-873913	Shaft - Input	1
33	BB-006-36	Ball Bearing	1
34	00-937065	Seal - Oil	1

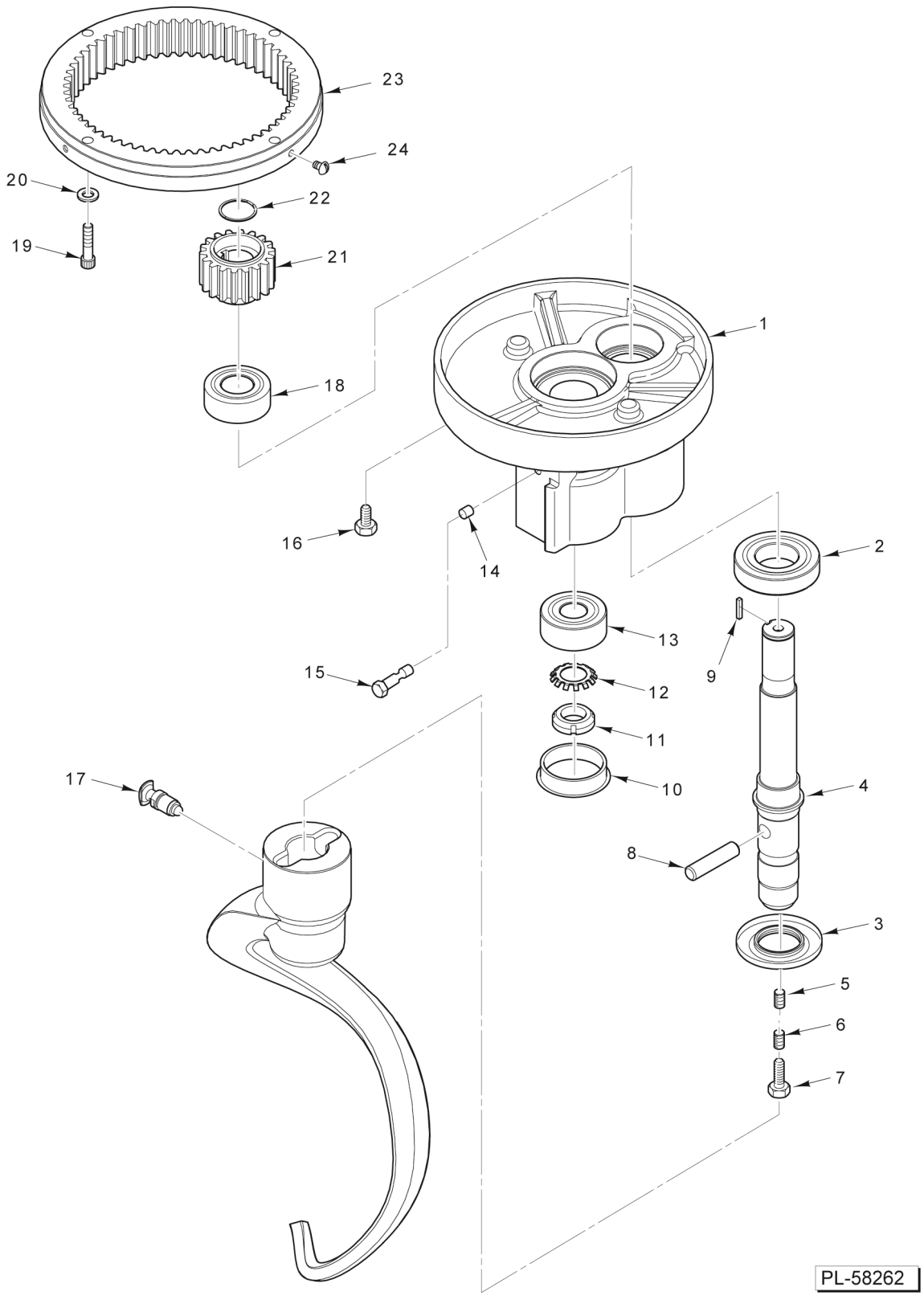

PLANETARY

PLANETARY

ILLUS. PL-58262	PART NO.	NAME OF PART	AMT.
1	00-873995-00002	Planetary	1
2	BB-007-01	Ball Bearing	1
3	00-292288	Seal	1
4	00-873923	Shaft - Agitator	1
5	00-007744	Set Screw Hdls., Cone Pt	1
6	SC-047-41	Set Screw 3/8-16 x 3/8 Hex Hdls., Cup Pt	1
7	00-064723	Plug - Agitator Shaft	1
8	00-873953	Pin - Agitator Shaft	1
9	00-012430-00154	Key 1/4 x 1/4 13/8	1
10	00-874291	Plug - Planetary (Plastic)	1
11	NS-034-06	Lock Nut	1
12	WL-012-06	Lockwasher - Bearing 0.989 x 1.719	1
13	BB-021-52	Ball Bearing	1
14	00-874181	OBS. Order Item 15	1
15	00-938833	Screw, Scraper Mount	1
16	SC-041-26	Cap Screw 3/8-16 x 1/2 Hex Hd. (SST)	2
17	00-874145	Plunger Assy	1
18	BB-021-35	Ball Bearing	1
19	SC-040-23	Cap Screw 3/8-16 x 11/4 Hex Soc. Hd	4
20	WL-019-92	Lockwasher 3/8 Helical	4
21	00-024270	Pinion - Internal (18T)	1
22	RR-005-08	Retaining Ring	1
23	00-437692	Gear - Internal	1
24	SC-021-37	Mach. Screw 1/4-20 x 3/8 Slotted Rd. Hd. (SST)	3
	SC-128-80	Mach. Screw 1/4-20 x 3/8 Tx. Button Hd. (SST)	3

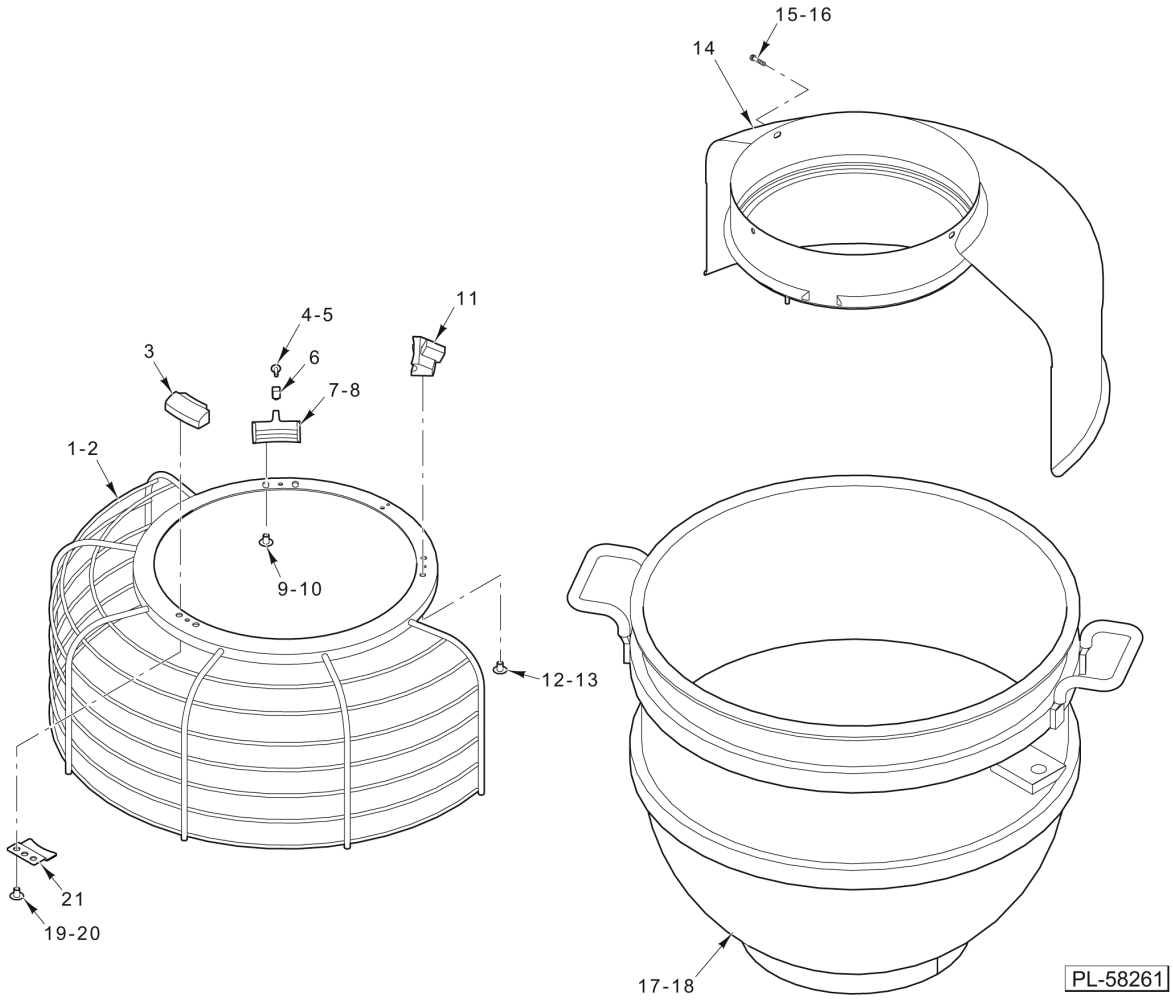

BOWL GUARD

BOWL GUARD

ILLUS. PL-58261	PART NO.	NAME OF PART	AMT.
1	00-874124	Wire Cage	1
2	00-874124-00002	Wire Cage (Security)	1
3	00-874126	Shoe - Front	1
4	SC-123-07	Mach. Screw 8-32 x 1/2 Slotted Truss Hd	1
5	SC-128-66	Mach. Screw 8-32 x 1/2 Tx. Button Hd. (ML-134341)	1
6	00-437720	Key - Shoe	1
7	00-437433-00002	Shoe - Adjustable (All except ML-134341)	1
8	00-437433-00003	Shoe - Adjustable (ML-134341)	1
9	SC-122-45	Mach. Screw 1/4-20 x 3/8 Slotted Truss Hd	2
10	SC-128-65	Mach. Screw 1/4-20 x 1/2 Tx. Button Hd. (SST) (ML-134341)	2
11	00-874127	Shoe - Fixed	1
12	SC-122-45	Mach. Screw 1/4-20 x 3/8 Slotted Truss Hd	2
13	SC-128-80	Mach. Screw 1/4-20 x 3/8 Tx. Button Hd. (SST)	2
14	00-874123	Guard - Splash & Drip	1
15	SC-021-37	Mach. Screw 1/4-20 x 3/8 Slotted Rd. Hd. (SST)	3
16	SC-128-80	Mach. Screw 1/4-20 x 3/8 Tx. Button Hd. (SST)	3
17	00-875603	Bowl Assy. (60 Quart) (Packaged)	1
18	00-875604	Bowl Assy. (40 Quart) (Packaged) (Not Shown)	1
19	SC-122-45	Mach. Screw 1/4-20 x 3/8 Slotted Truss Hd	2
20	SC-128-80	Mach. Screw 1/4-20 x 3/8 Tx. Button Hd. (SST)	2
21	00-874168	Stop - Cage	1
	00-512987	Adhesive (ML-134341)	AR
	00-916004	Wire Cage Assy	1
	00-916004-00002	Wire Cage Assy. - Security	AR
	00-438824	Chute - Ingredient (Packaged)	1

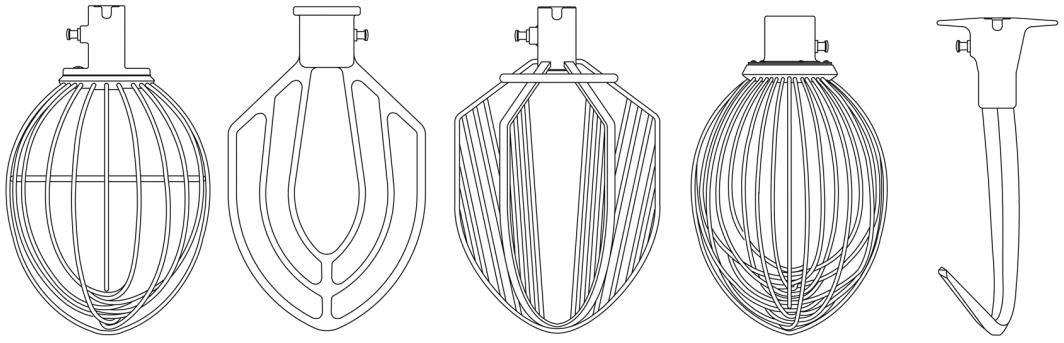

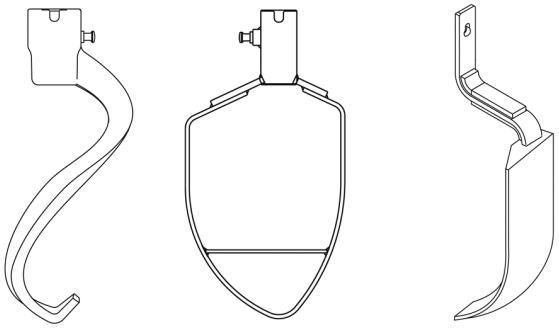

60-QUART AGITATORS

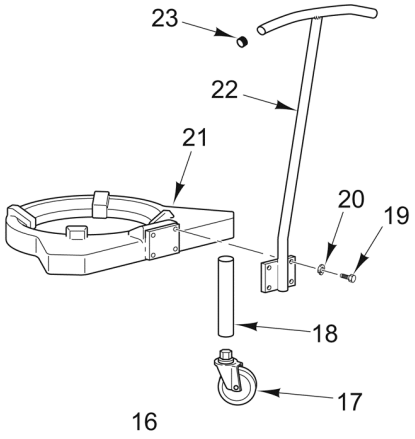

BOWL TRUCK

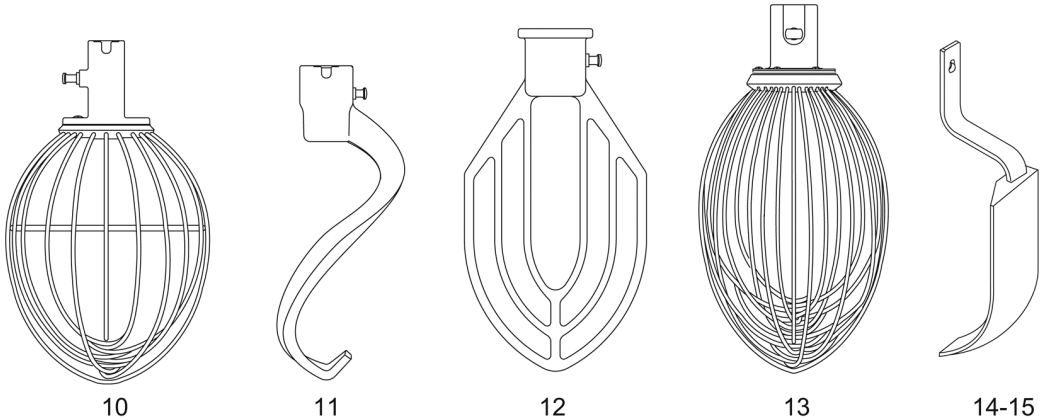

40-QUART AGITATORS

PL-59909

AGITATORS AND ACCESSORIES

AGITATORS AND ACCESSORIES

ILLUS. PL-59909	PART NO.	NAME OF PART	AMT.
1	00-874271	"I" Wire Whip (60 Quart) (Packaged)	1
2	00-874172	"B" Flat Beater (60 Quart) (Packaged)	1
3	00-874278	"C" Six Wing Whip (60 Quart) (Packaged)	1
4	00-874190	"D" Wire Whip (60 Quart) (Packaged)	1
5	00-874284	"E" Dough Arm (60 Quart) (Packaged)	1
6	00-874285	"ED" Dough Arm (60 Quart) (Packaged)	1
7	00-874286	"P" Pastry Knife (60 Quart) (Packaged)	1
8	00-874267	Bowl Scraper (60 Quart) (Packaged) (Incls. Item 9)	1
9	00-435637-00001	Scraper - Bowl (60 Qt.)	1
10	00-874250	"I" Wire Whip (40 Quart) (Packaged)	1
11	00-874292	"ED" Dough Arm (40 Quart) (Packaged)	1
12	00-874248	"B" Flat Beater (40 Quart) (Packaged)	1
13	00-874249	"D" Wire Whip (40 Quart) (Packaged)	1
14	00-874268	Bowl Scraper (40 Quart) (Packaged) (Incls. Item 15)	1
15	00-435637-00004	Scraper - Bowl (40 Qt.)	1
16	00-874203	Bowl Truck (Packaged) (Incls. Items 17 thru 23)	1
17	00-874288	Caster (4 In.)	3
18	00-874287	Leg	3
19	SC-041-02	Cap Screw 1/4-20 x 1 Hex Hd. (SST)	4
20	WL-006-17	Lockwasher 1/4 Helical (SST)	4
21	00-874110-00002	Truck - Bowl	1
22	00-874360	Handle (With Plate)	1
23	00-873322	Grip - Bowl Truck	2
	00-438104-00004	Bowl Extension Assy. (60 Quart) (Packaged)	1
	00-438082	Splash Cover (60 Quart) (Packaged)	1
	00-438081	Splash Cover (40 Quart) (Packaged)	1