CATALOG OF REPLACEMENT PARTS



HL800 & HL1400 SERIES LEGACY MIXER

ML-134354	HL800
ML-134355	HL800C
ML-134334	HL1400
ML-134337	HL1400C
ML-134361	HL1400N

PRIOR MLS COVERED IN THIS MANUAL

ML-134300	HL1400
ML-134306	HL800
ML-134322	HL800C

A product of HOBART 701 S. RIDGE AVENUE TROY, OHIO 45374-0001

FORM 43119 Rev. R (January 2022)

 © HOBART 2022

Table of Contents

5 CONTROL PANEL

7 ELECTRICAL COMPONENTS (HL1400 SERIES) (ML-134300,ML-134334,ML-134337,ML-134361)

9 ELECTRICAL COMPONENTS (HL800 SERIES) (ML-134306,ML-134322,ML-134354,ML-134355)

11 BASE AND PEDESTAL

13 BOWL SUPPORT (ALL MODELS EXCEPT ML-134361)

17 BOWL SUPPORT (ML-134361)

19 TRANSMISSION CASE AND MOTOR

21 TRANSMISSION

23 PLANETARY (HL800 SERIES) (ML-134306, ML-134322, ML-134354, & ML-134355)

27 PLANETARY (HL1400 SERIES) (ML-134300, ML-134334, ML-134337, & ML-134361)

31 BOWL GUARD

33 AGITATORS AND ACCESSORIES (40 & 60 QUART)

35 AGITATORS AND ACCESSORIES (80 & 140 QUART)

37 BOWL AND EXTENSIONS

39 LABELS AND NAMEPLATES

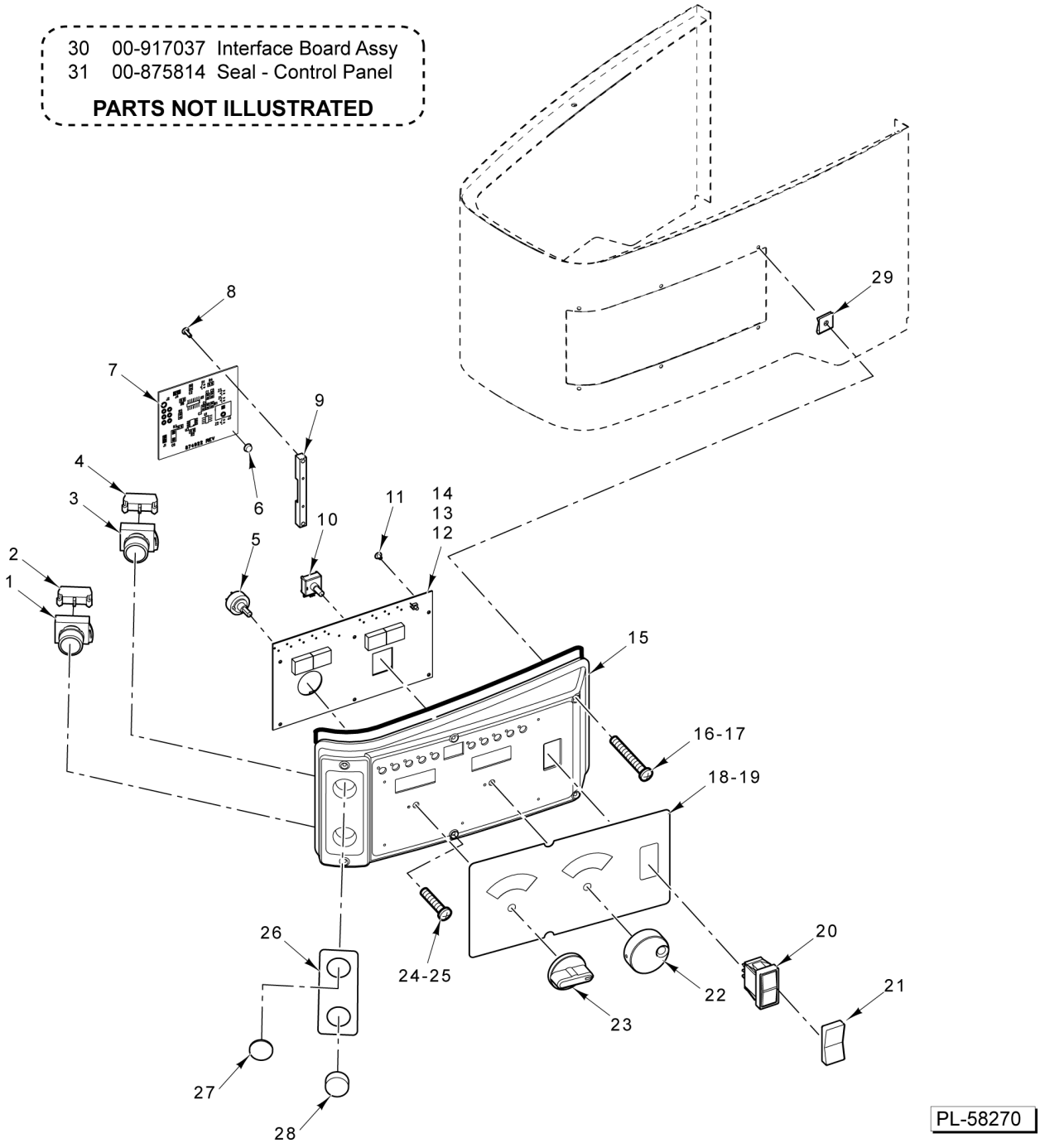

CONTROL PANEL

CONTROL PANEL

ILLUS. PL-58270	PART NO.	NAME OF PART	AMT.
1	00-478752-00002	Switch - Operator (Stop)	1
2	00-087711-322-4	Block - Contact (Stop)	1
3	00-478752-00001	Switch - Operator (Start)	1
4	00-087711-322-3	Block - Contact (Start)	1
5	00-874631	Selector - Switch Assy. (Speed Selector)	1
6	00-916063	Bumper	1
7	00-916818	Interface - Circuit Board Assy	1
8	SD-038-49	Self-Tapping Screw 6-32 x 1/2 Hex Washer Hd., Type RL	2
9	00-916061	Block - Interface Mounting	1
10	00-875723	Encoder Assy. (Time Selector)	1
11	SD-039-23	Self-Tapping Screw 6-32 x 1/4 Hex Washer Hd., Type RL	6
12	00-916656	PCB Assy. (Timer Board)	1
13	00-916657	PCB Assy. (Timer Board) (With Recipe Timer)	1
14	00-916853	PCB Assy. (Timer Board) (ML-134361)	1
15	00-873945	Panel - Control	1
16	SC-128-40	Mach. Screw 8-32 x 2-1/4 Phil. Oval Hd. (SST) (ML-134300, ML-134306, ML-134334, ML-134354 & ML-134361)	2
17	00-874468	Extension - Screw (ML-134322, ML-134337, & ML-134355)	2
18	00-916231	Label - Overlay	1
19	00-916232	Label - Overlay (With Recipe Timer)	1
20	00-087711-330-1	Switch - Rocker	1
21	00-937533	Switch Cover	1
22	00-875724	Knob - Timer	1
23	00-874630	Knob - Speed Selector	1
24	SC-128-39	Mach. Screw 8-32 x 1-1/2 Phil. Oval Hd. (SST)	4
25	SC-128-84	Mach. Screw 8-32 x 1-1/2 Tx. Flat Hd. (SST) (ML-134322 & ML-134337)	4
26	00-875451	Label (Mix/Stop)	1
27	00-478753-00001	Cap - Round Push Button (Flush)	1
28	00-478751-00001	Cap - Round Push Button (Extended)	1
29	00-874338	Fastener - Self-Retaining	6
30	00-917037	Interface Board Assy. (ML-134354 & ML-134355 (Incls. Item 7)	1
31	00-875814	Seal - Control Panel	1

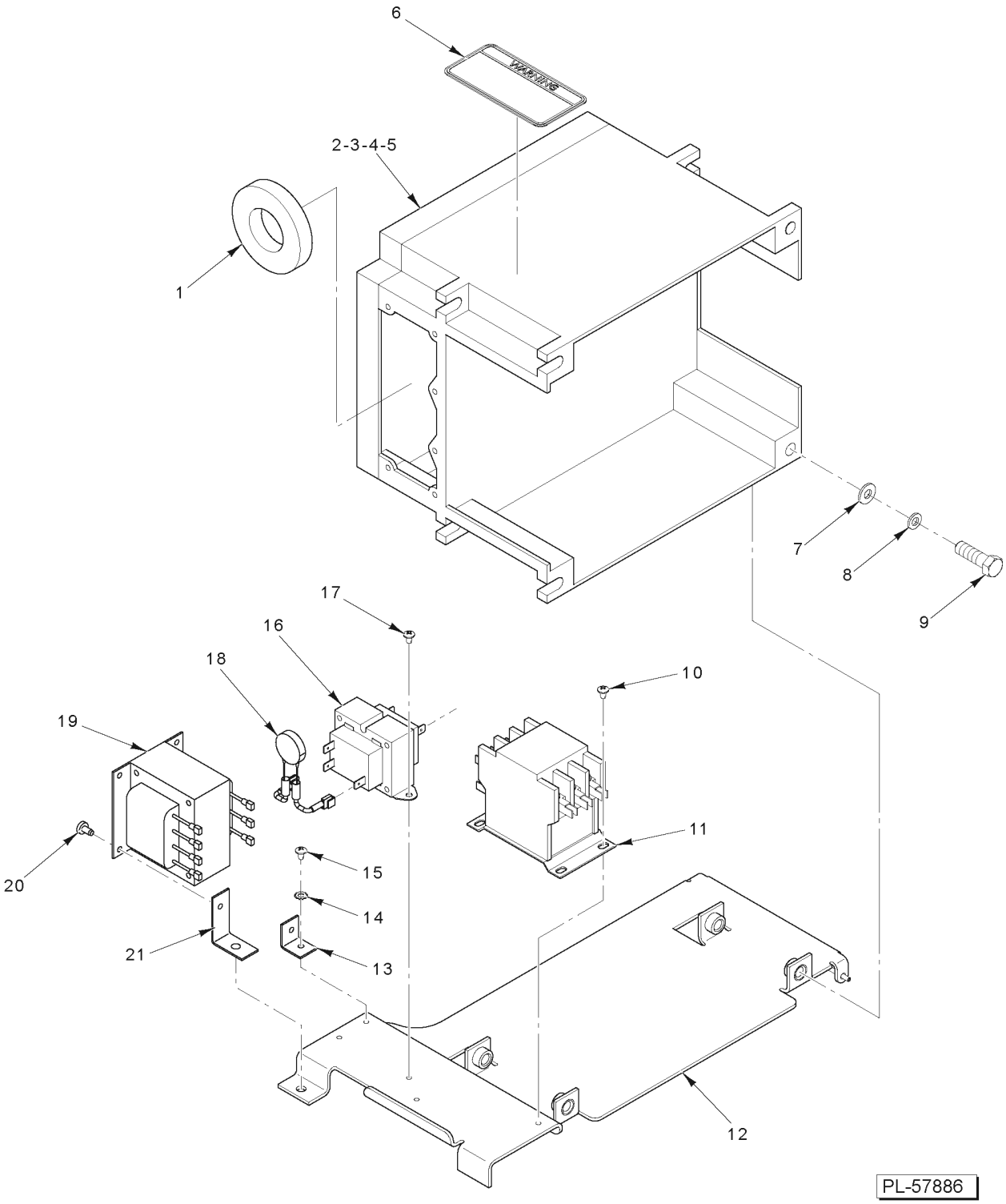

ELECTRICAL COMPONENTS
(HL1400 SERIES) (ML-134300,ML-134334,ML-134337,ML-134361)

ELECTRICAL COMPONENTS
(HL1400 SERIES) (ML-134300,ML-134334,ML-134337,ML-134361)

ILLUS. PL-57886	PART NO.	NAME OF PART	AMT.
1	00-916185-00001	Ferrite	1
2	00-916183-00001	Drive - Controller (230 V.) (ML-134300, ML-134334, & ML-134337)	1
3	00-916877-00001	Drive - Controller (230 V.) (ML-134361)	1
4	00-916183-00002	Drive - Controller (460 V.) (ML-134300, ML-134334, & ML-134337)	1
5	00-916877-00002	Drive - Controller (460 V.) (ML-134361)	1
6	00-438131-00174	Label - Warning	1
7	WS-006-36	Washer	4
8	WL-004-02	Lockwasher 3/8 Helical	4
9	SC-118-09	Cap Screw 3/8-16 x 1-1/4 Hex Hd	4
10	SD-015-39	Self-Tapping Screw 8-32 x 1/4 Phil. Pan Hd., Type TT	2
11	00-087713-107-4	Contactor (30 Amp./Aux., 3 Ph.) (ML-134300, ML-134334, & ML-134337)	1
12	00-875974	NLA - Obsolete--Plate - Drive Mount Assy	1
13	00-916586	Bracket - Transformer (460 V.) (ML-134334 & ML-134337)	1
14	WL-007-06	Lockwasher #8 External	1
15	SD-015-39	Self-Tapping Screw 8-32 x 1/4 Phil. Pan Hd., Type TT	1
16	00-294500-00054	Transformer (208-240 V.)	1
17	SD-015-39	Self-Tapping Screw 8-32 x 1/4 Phil. Pan Hd., Type TT	2
18	00-916176	IC MOV Sub-Assy. (230 V.)	1
19	00-916588	Transformer (460 V.) (ML-134300, ML-134334, & ML-134337)	1
20	SD-015-20	Self-Tapping Screw 10-32 x 3/8 Phil. Pan Hd., Type TT (ML-134334 & ML-134337)	2
21	00-916587	Bracket - Transformer Front (460 V.) (ML-134334 & ML-134337)	1
			AR

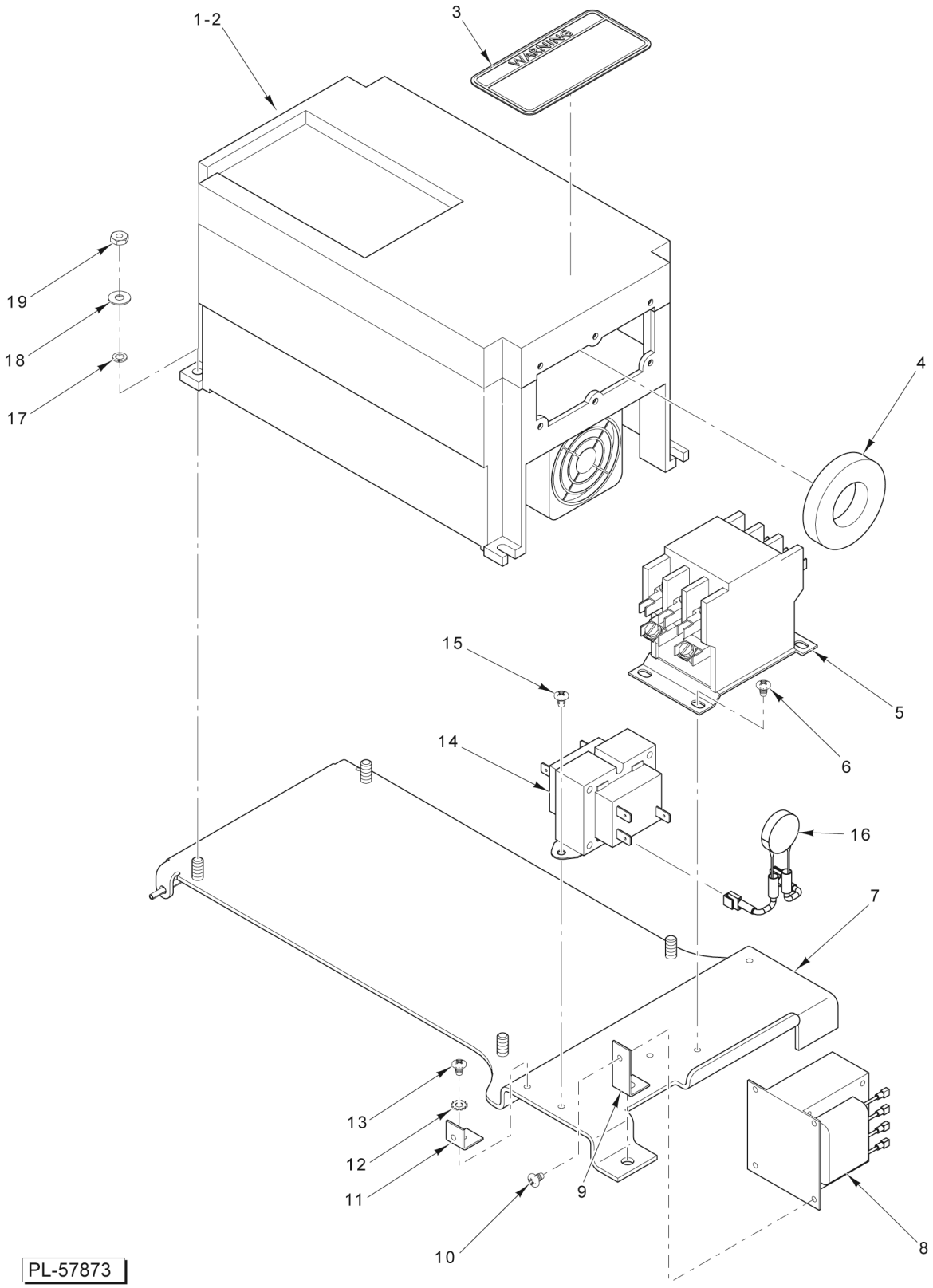

ELECTRICAL COMPONENTS
(HL800 SERIES) (ML-134306,ML-134322,ML-134354,ML-134355)

ELECTRICAL COMPONENTS
(HL800 SERIES) (ML-134306,ML-134322,ML-134354,ML-134355)

ILLUS. PL-57873	PART NO.	NAME OF PART	AMT.
1	00-916184-00003	Drive - Controller (230 V.)	1
2	00-916184-00004	Drive - Controller (460 V.)	1
3	00-438131-00174	Label - Warning	1
4	00-916185-00001	Ferrite	1
5	00-087713-107-4	Contactor (30 Amp./Aux., 3 Ph.)	1
6	SD-015-39	Self-Tapping Screw 8-32 x 1/4 Phil. Pan Hd., Type TT	2
7	00-916098	NLA - Obsolete--Plate - Drive Mount Assy	1
8	00-916588	Transformer (460 V.)	1
9	00-916587	Bracket - Transformer Front (460 V.)	1
10	SD-015-20	Self-Tapping Screw 10-32 x 3/8 Phil. Pan Hd., Type TT	2
11	00-916586	Bracket - Transformer (460 V.)	1
12	WL-007-06	Lockwasher #8 External	1
13	SD-015-39	Self-Tapping Screw 8-32 x 1/4 Phil. Pan Hd., Type TT	1
14	00-294500-00054	Transformer (208-240 V.)	1
15	SD-015-39	Self-Tapping Screw 8-32 x 1/4 Phil. Pan Hd., Type TT	2
16	00-916176	IC MOV Sub-Assy. (230 V.)	1
17	WS-002-51	Washer	4
18	WL-003-22	Lockwasher #10 Helical	4
19	NS-009-22	Nut 10-24 Hex	4

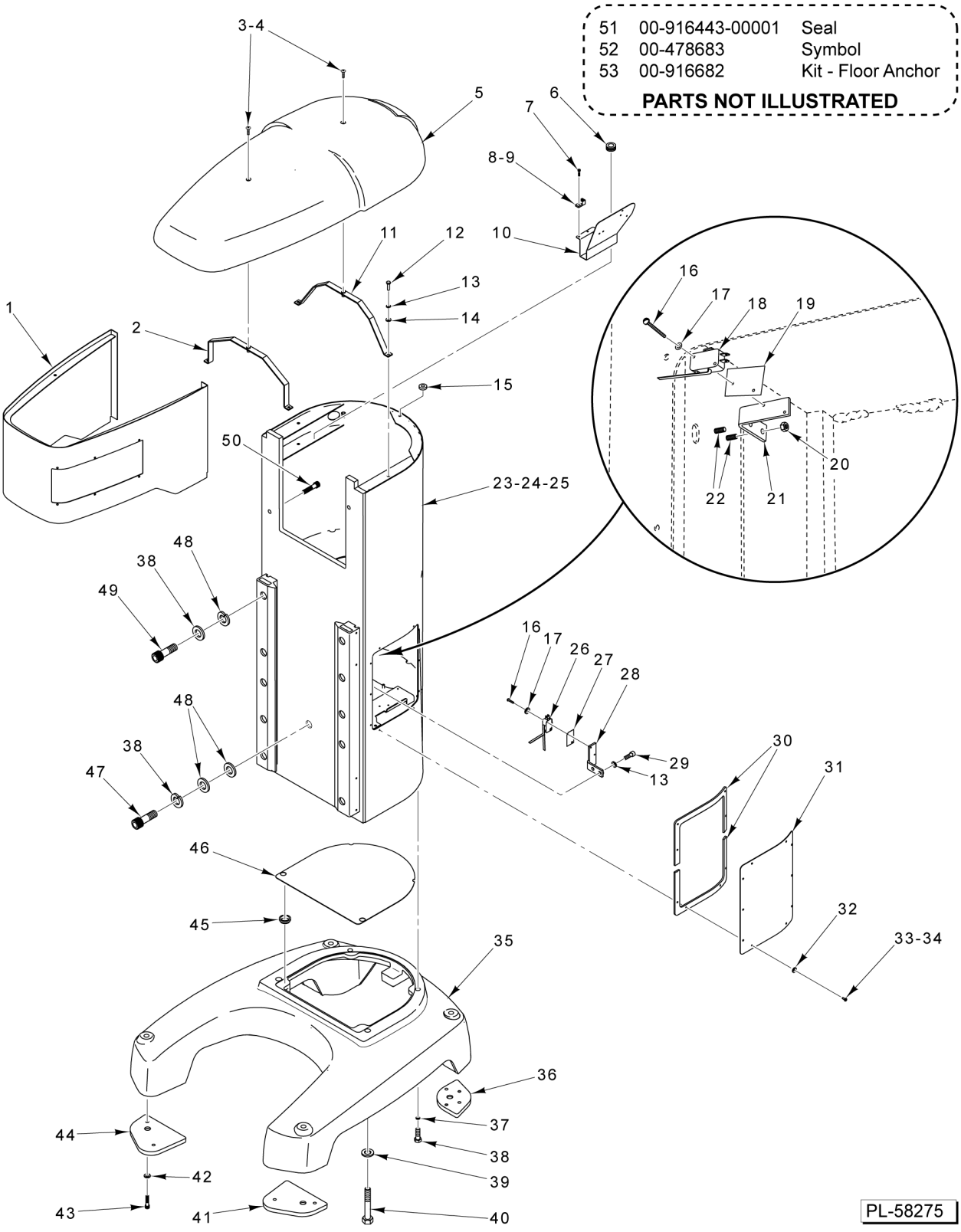

BASE AND PEDESTAL

BASE AND PEDESTAL

ILLUS. PL-58275	PART NO.	NAME OF PART	AMT.
1	00-875860	Wrapper Assy. - Transmission	1
2	00-874569	Strap Assy. - Top Cover	1
3	SC-120-29	Mach. Screw 1/4-20 x 1 Phil. Oval Hd. (ML-134300, ML-134306, ML-134334, ML-134354, & ML-134361)	2
4	SC-128-63	Mach. Screw 1/4-20 x 2 Tx. Flat Hd. (ML-134322, ML-134337, & ML-134355)	1
5	00-875786	Top - Cover	1
6	FE-021-13	Grommet	1
7	SD-029-02	Self-Tapping Screw 10-24 x 1/2 Slotted Pan Hd., Type F	2
8	00-118544-00002	Lug - Ground (ML-134300, ML-134306, ML-134322, ML-134334, ML-134337 & ML-134361)	1
9	00-118544-00001	Lug - Ground (ML-134354 & ML134355)	1
10	00-916173	Shield - Wire	1
11	00-874571	Strap Assy. - Top Cover	1
12	SC-036-06	Cap Screw 1/4-20 x 1 Hex Hd	5
13	WL-003-38	Lockwasher 1/4 Helical	4
14	WS-003-43	Washer	4
15	FE-024-23	Bushing - Electrical (Snap)	1
16	SC-060-40	Mach. Screw 4-40 x 5/8 Slotted Rd. Hd	2
17	WL-003-03	Lockwasher #4 Helical	2
18	00-087711-00248	Switch - Bowl Height	1
19	00-873376	Insulator	1
20	NS-009-30	Nut 10-32 Hex	2
21	00-874578	Bracket - Bowl Height Switch	1
22	00-113631-00040	Stud - Self-Clinching	2
23	00-916056-00002	Pedestal (ML-134306, ML-134322, ML-134354, & ML-134361)	1
24	00-916051-00002	Pedestal (ML-134300, ML-134334, & ML-134337)	1
25	00-916672-00002	Pedestal (ML-134361)	1
26	00-087711-00248	Switch - Bowl Down Limit	1
27	00-873376	Insulator	1
28	00-873371	Bracket - Down Limit Switch	1
29	SC-089-02	Cap Screw 1/4-20 x 3/4 Hex Socket Hd	2
30	00-875815	Seal - Side Panel	2
31	00-874386-00001	Cover - Side	1
32	WS-023-22	Washer (SST)	8
33	SD-009-41	Self-Tapping Screw 8-32 x 3/8 Phil. Pan Hd., Type F (SST) (ML-134300, ML-134306, ML-134334, ML-134354, & ML-134355)	8
34	SC-128-66	Mach. Screw 8-32 x 3/8 Tx. Button Hd. (ML-134322, ML-134337, & ML-134355)	8
35	00-873960-003-2	Base	1
36	00-874149	Pad - Foot (Rear)	2
37	WL-004-11	Lockwasher 1/2 Helical	2
38	SC-037-01	Cap Screw 1/2-13 x 1-1/2 Hex Hd	2
39	WL-004-19	Lockwasher 5/8 Helical	2
40	SC-037-36	Cap Screw 5/8-11 x 3 1/2 Hex Hd	2
41	00-874150	Pad - Foot (Left)	2
42	WS-005-49	Washer	8
43	SC-110-03	Cap Screw 3/8-16 x 3/4 Hex Socket Hd	8
44	00-874153	Pad - Foot (Right)	1
45	00-072201	Washer - Bevel	4
46	00-874327	Plate - Pedestal Bottom	1
47	SC-110-55	Cap Screw 1/2-20 x 1-1/4 Socket Hex Hd	1
48	WS-008-04	Washer	2
49	SC-040-69	Cap Screw 1/2-20 x 2 Hex Socket Hd	10
50	SC-120-38	Cap Screw 5/16-18 x 1 Hex Hd	4
51	00-916443-00001	Seal	1
52	00-478683	Symbol - Warning High Voltage	1
53	00-916682	Kit - Floor Anchor	AR

59	00-874139	Handle Assy. - Bowl Lock
60	00-874139-00002	Handle Assy. - Bolw Lock

PARTS NOT ILLUSTRATED

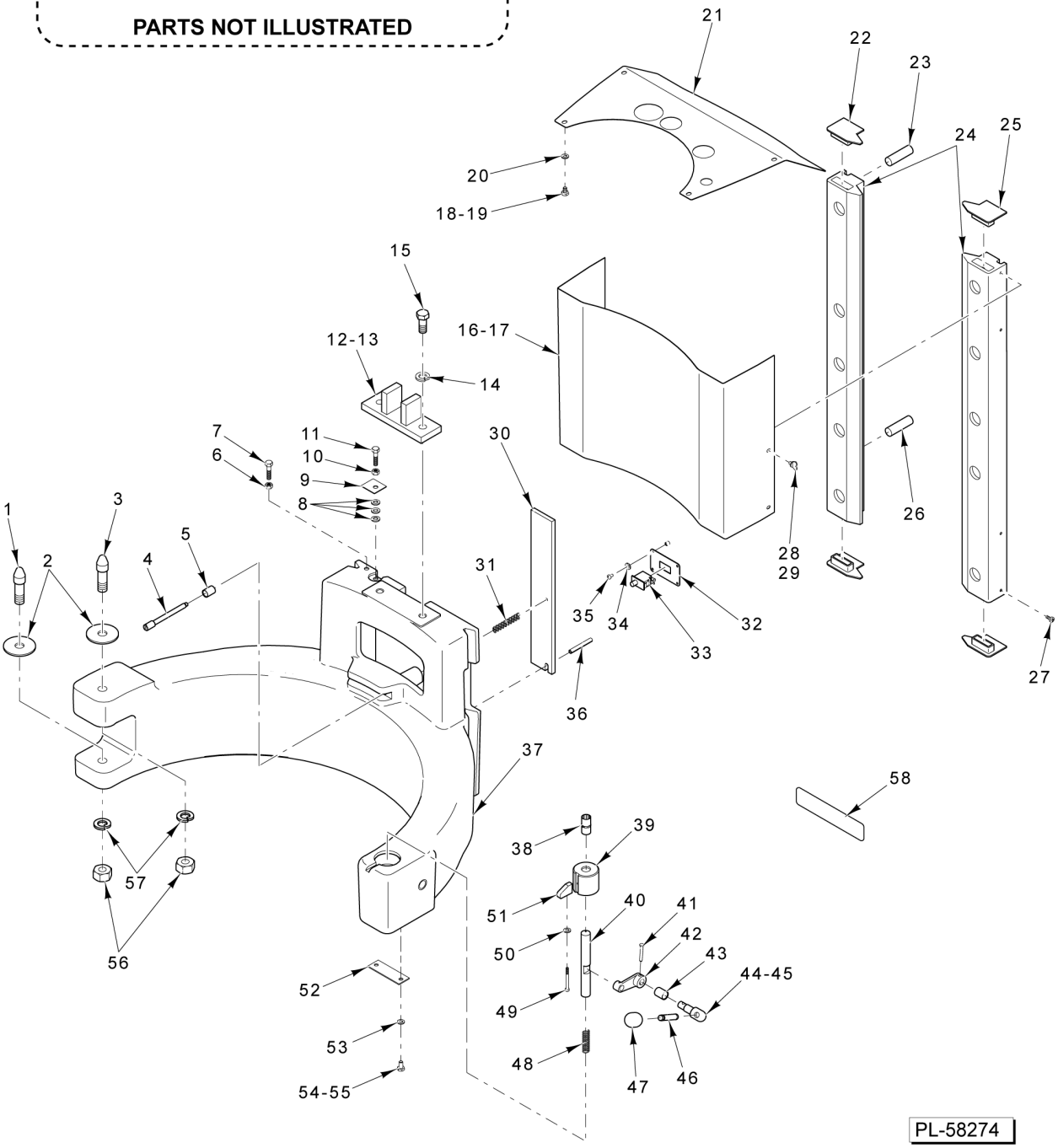

BOWL SUPPORT
(ALL MODELS EXCEPT ML-134361)

BOWL SUPPORT
(ALL MODELS EXCEPT ML-134361)

ILLUS. PL-58274	PART NO.	NAME OF PART	AMT.
1	00-916021	Pin - Bowl	1
2	00-916022	Bushing - Bowl Support	2
3	00-916351	Pin - Upper Bowl	1
4	00-874387	Pin - Limit	1
5	00-874492	Bushing - Bowl-In	1
6	NS-013-14	Nut 5/16-18 Hex	1
7	SC-041-13	Cap Screw 5/16-18 x 1 Hex Hd. (SST)	1
8	WS-006-36	Washer	3
9	00-916359	Plate - Stop Bowl Travel	1
10	NS-013-14	Nut 5/16-18 Hex	1
11	SC-041-13	Cap Screw 5/16-18 x 1 Hex Hd. (SST)	1
12	00-873352-00002	Actuator - Bracket (HL1400 Series)	1
13	00-873352-00003	Actuator - Bracket (HL800 Series)	1
14	WL-004-11	Lockwasher 1/2 Helical	2
15	SC-062-88	Cap Screw 1/2-13 x 1-1/4 Hex Hd	2
16	00-916087	Apron - Back (ML-134306, ML-134322, ML-134354, & ML-134355)	1
17	00-916088	Apron - Back (ML-134300, ML-134334, & ML-134337)	1
18	SC-041-86	Cap Screw 1/4-20 x 3/8 Hex Hd. (SST) (ML-134300, ML-134334, ML-134306, & ML-134354)	4
19	SC-128-80	Mach. Screw 1/4-20 x 3/8 Tx. Button Hd. (SST) (ML-134322, ML-134337, & ML-134355)	4
20	WL-006-17	Lockwasher 1/4 Helical (SST)	4
21	00-874597	Apron - Top	1
22	00-479619	Cap - Slideway	2
23	00-011800-00143	Pin - Dowel 1/2 x 1-3/4 SAE	2
24	00-479598	Slideway	2
25	00-479618	Cap - Slideway	2
26	00-011800-00143	Pin - Dowel 1/2 x 1-3/4 SAE	2
27	SC-128-12	Mach. Screw 10-24 x 1/4 Phil. Pan Hd. (SST) (ML-134334 & ML-134354)	4
28	00-070641-00009	Thumb Screw	4
29	SC-128-69	Mach. Screw 10-24 x 3/8 Tx. Button Hd. (ML-134322, ML-134337, & ML-134355)	4
30	00-874566-00002	Plate - Bowl In Switch	1
31	00-873377	Spring - Bowl Pin	1
32	00-874479	Plate - Bowl In Switch	1
33	00-087711-00338	Switch - Bowl In	1
34	WL-003-12	Lockwasher #8 Helical	2
35	SC-018-33	Mach. Screw 8-32 x 5/16 Phil. Pan Hd	2
36	RP-004-28	Pin - Roll 0.250	1
37	00-873337	Yoke - Bowl	1
38	00-874390	Bushing - Bowl Lock	1
39	00-874376	Button - Bowl Rest	1
40	00-874391	Pin - Bowl	1
41	00-874388	Detent - Clevis Pin	1
42	00-874218	Clevis - Bowl Lock	1
43	00-874138	Bushing - Bowl Pin	1
44	00-874220	Handle - Bowl Pin	1
45	00-874139-00002	Handle Assy. - Bowl Lock (Security Weld/Correctional)	1
46	00-874197	Shaft - Bowl Pin Handle	1
47	00-875356	Handle - Lift Lever	1
48	00-874198	Spring - Bowl Pin	1
49	SC-092-27	Cap Screw 8-32 x 1-3/4 Hex Socket Hd	1
50	WL-003-12	Lockwasher #8 Helical	1
51	00-874380	Ramp - Wear	1
52	00-874199	Strap - Spring Retaining	1
53	WL-003-38	Lockwasher 1/4 Helical	2
54	SC-036-14	Cap Screw 1/4-20 x 1/2 Hex Hd. (ML-134300, ML-134334, ML-134306, & ML-134354)	2
55	SC-121-72	Mach. Screw 1/4-20 x 1/2 Tx. Button Hd. (SST) (ML-134322, ML-134337, & ML-134355)	2

BOWL SUPPORT
(ALL MODELS EXCEPT ML-134361)

ILLUS. PL-58274	PART NO.	NAME OF PART	AMT.
56	NS-013-40	Nut 5/8-11 Hex	2
57	WL-004-18	Lockwasher 5/8 Light	2
58	00-938113	Label - Unlock Warning (Trilingual)	1
59	00-874139	Handle Assy. - Bowl Lock (Incls. Items 44, 45, & 46) (ML-134300, ML-134306, ML-134334, & ML-134354)	1
60	00-874139-00002	Handle Assy. - Bowl Lock (Incls. Items 44, 45, & 46) (ML-134322, ML-134337, & ML-134355)	1

NOTES

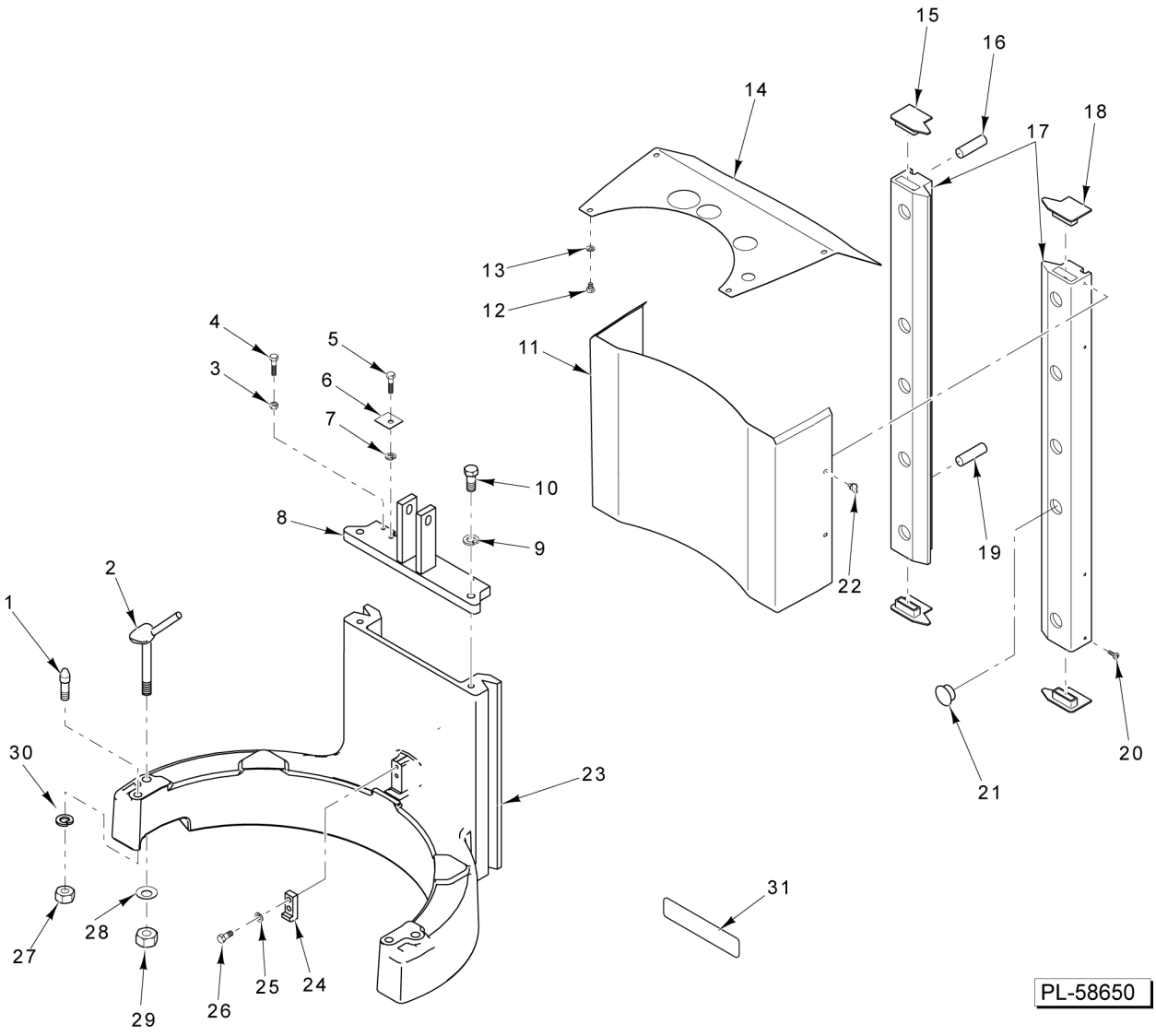

BOWL SUPPORT (ML-134361)

BOWL SUPPORT (ML-134361)

ILLUS. PL-58650	PART NO.	NAME OF PART	AMT.
1	00-019195-00001	Stud - Bowl Locating	2
2	00-065922-00020	Bowl Clamp Assy	2
3	NS-013-14	Nut 5/16-18 Hex	1
4	SC-041-09	Cap Screw 5/16-18 x 1/2 Hex Hd. (SST)	1
5	SC-041-09	Cap Screw 5/16-18 x 1/2 Hex Hd. (SST)	1
6	00-916359	Plate - Stop Bowl Travel	1
7	WL-003-44	Lockwasher 5/16 Helical	3
8	00-917163	Bracket - Actuator	1
9	WL-004-11	Lockwasher 1/2 Helical	2
10	SC-062-88	Cap Screw 1/2-13 x 1-1/4 Hex Hd	2
11	00-916683	Apron - Back	1
12	SC-041-86	Cap Screw 1/4-20 x 3/8 Hex Hd. (SST)	4
13	WL-006-17	Lockwasher 1/4 Helical (SST)	4
14	00-874597	Apron - Top	1
15	00-479619	Cap - Slideway	2
16	00-011800-00143	Pin - Dowel 1/2 x 1-3/4 SAE	2
17	00-479598	Slideway	2
18	00-479618	Cap - Slideway	2
19	00-011800-00143	Pin - Dowel 1/2 x 1-3/4 SAE	2
20	SC-128-12	Mach. Screw 10-24 x 1/4 Phil. Pan Hd. (SST)	4
21	PB-005-11	Plug - Button	10
22	00-070641-00009	Thumb Screw	4
23	00-916678	Yoke - Bowl	1
24	00-064394	Retainer - Bowl	1
25	WL-003-44	Lockwasher 5/16 Helical	2
26	SC-120-38	Cap Screw 5/16-18 x 1 Hex Hd	2
27	NS-013-30	Nut 1/2-13 Hex	2
28	WL-006-36	Lockwasher 1/2 Helical	2
29	NS-046-18	Lock Nut 5/8-11 Hex Nylok	2
30	00-064636	Washer - Bowl Clamp	2
31	00-938113	Label - Unlock Warning (Trilingual)	1

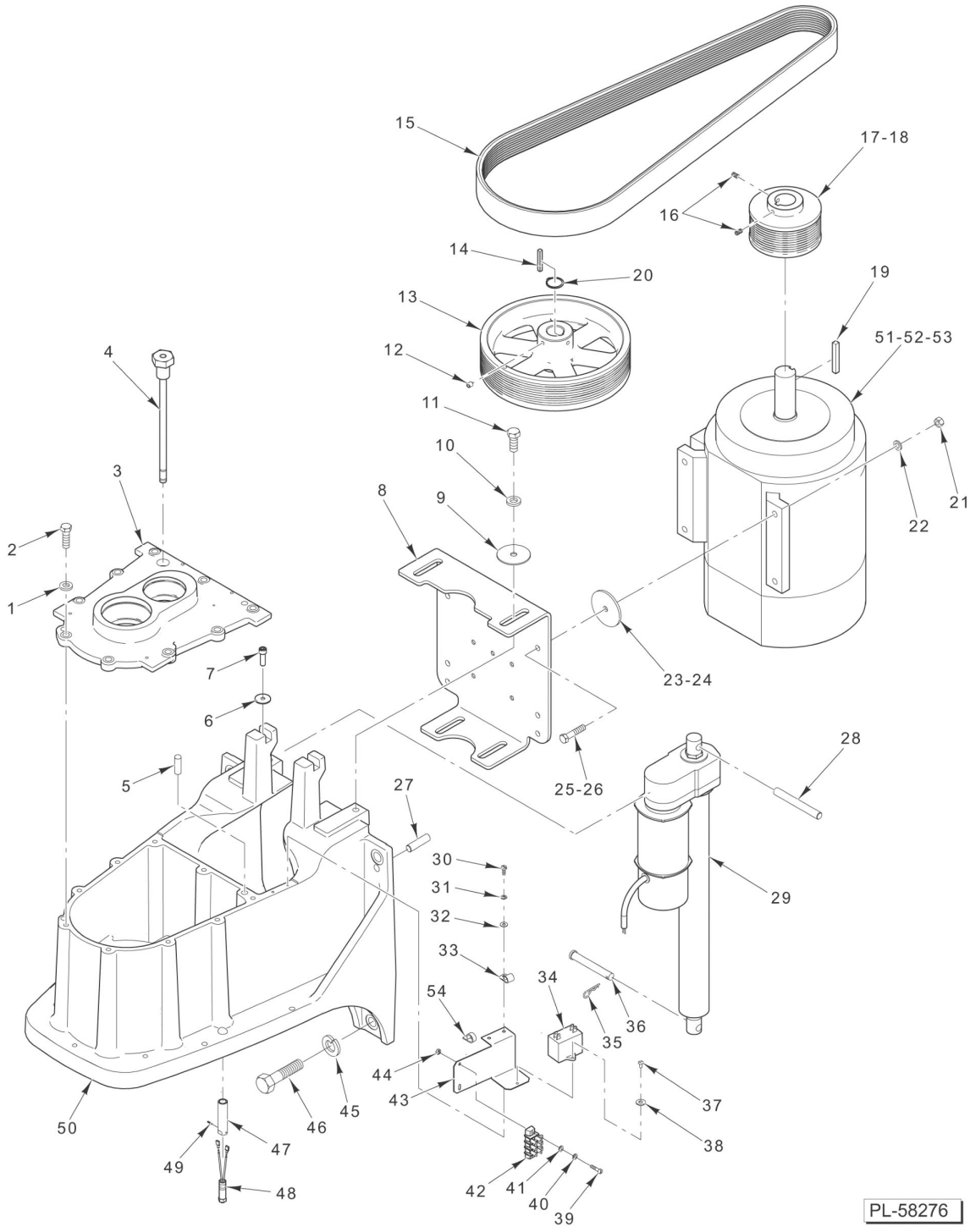

TRANSMISSION CASE AND MOTOR

TRANSMISSION CASE AND MOTOR

ILLUS. PL-58276	PART NO.	NAME OF PART	AMT.
1	WL-019-09	Lockwasher 3/8 Helical	9
2	SC-118-09	Cap Screw 3/8-16 x 1-1/4 Hex Hd	9
3	00-874653	Cover - Transmission	1
4	00-916182	Dipstick - Weldment	1
5	00-557555	NLA - Obsolete--Dowel	2
6	00-916352	Washer - Flat	2
7	SC-040-15	Cap Screw 5/16-18 x 1-1/4 Hex Socket Hd	2
8	00-874441-00002	Plate - Motor Mounting	1
9	WS-008-40	Washer	4
10	WL-019-11	Lockwasher 1/2 Helical	4
11	SC-062-88	Cap Screw 1/2-13 x 1-1/4 Hex Hd	4
12	SC-075-15	Set Screw 5/16-18 x 3/8 Hex Hdls., Cup Pt	2
13	00-916003	Sheave - Driven (10L)	1
14	00-875419-00069	Key - Chamfered	1
15	00-874493	Belt	1
16	SC-075-15	Set Screw 5/16-18 x 3/8 Hex Hdls., Cup Pt	2
17	00-875805	Sheave - Drive (ML-134300, ML-134334, ML-134337, & ML-134361)	1
18	00-875939	Sheave - Drive (ML-134306, ML-134322, ML-134354, & ML-134355)	1
19	00-875419-00081	Key 5/16 x 5/16 x 2-3/8	1
20	RR-007-02	Retaining Ring	1
21	NS-013-22	Nut 3/8-16 Hex	4
22	WL-004-06	Lockwasher 3/8 Helical	4
23	00-875940	NLA - Obsolete--Spacer (ML-134306, ML-134322, ML-134354, & ML-134355)	4
24	00-873363	NLA - Obsolete--Spacer (ML-134300)	4
25	SC-118-08	Cap Screw 3/8-16 x 1-3/4 Hex Hd. (ML-134306, ML-134322, ML-134354, & ML-134355)	4
26	SC-124-91	Cap Screw 3/8-16 x 2-1/2 Hex Hd. (ML-134300, ML-134334, ML-134337, & ML-134361)	4
27	00-508208	Pin - Dowel	2
28	00-874315	Pin - Actuator (Upper)	1
29	00-916565	Actuator Assy	1
30	SC-018-20	Mach. Screw 10-24 x 1/2 Slotted Pan Hd	2
31	WL-003-22	Lockwasher #10 Light	2
32	WS-002-51	Washer	2
33	00-078752-00012	Clamp (3/8 In.)	1
34	00-110979-00100	Capacitor	1
35	PC-003-50	Cotter Pin 7/64 x 1 Lg	1
36	00-874117-00002	Pin - Clevis	1
37	SD-009-41	Self-Tapping Screw 8-32 x 3/8 Phil. Pan Hd., Type F (SST)	1
38	WS-023-22	Washer (SST)	1
39	SC-009-68	Mach. Screw 8-32 x 3/4 Slotted Rd. Hd	2
40	WL-003-15	Lockwasher #8 Light	2
41	WS-023-22	Washer (SST)	2
42	00-916269	Block - Terminal 1/4 QC	1
43	00-916270	Mount - Capacitor	1
44	NS-009-12	Nut 8-32 Hex	2
45	WL-004-19	Lockwasher 5/8 Helical	4
46	SC-129-34	Cap Screw 5/8-11 x 1-1/2 Hex Hd	4
47	00-874128	Extension - Bowl Guard Switch	1
48	00-874958-00001	Reed - Switch & Plug	1
49	SC-075-14	Set Screw 6-32 x 1/8 Hex Hdls., Cup Pt	1
50	00-874641	Case - Transmission	1
51	00-875993-00002	Motor Assy. (5 Hp.) (ML-134300, ML-134334, & ML-134337)	1
52	00-875995-00002	Motor Assy. (3 Hp.) (ML-134306 & ML-134322) (ML-134354 & ML-134355 Use On Serial Numbers 31-1398705 and Up)	1
53	00-916869-00001	Motor Assy. (5Hp.) (ML-134361)	1
54	00-294677-00002	Clamp - Wire (1/2 I.D.)	1
	00-934532	Harness - Main Control HL800 Before S/N 31-1453700	1
	00-916730-00001	Harness - Main Control HL800 Starting S/N 31-1453700	1
	00-916361-00001	Harness - Main Control	1
	00-916553	Puller Assy. - Motor	1

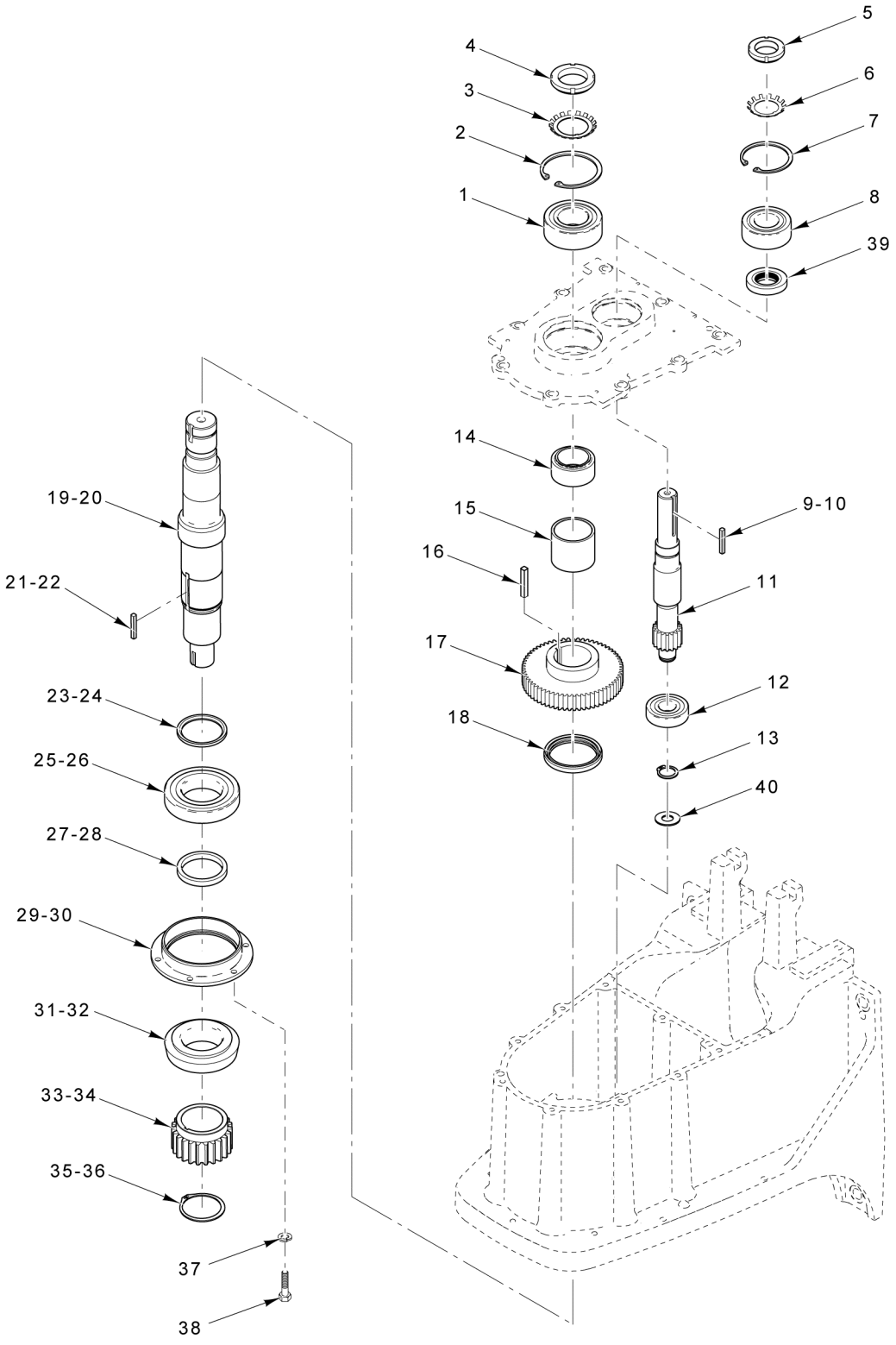

PL-58098

TRANSMISSION

TRANSMISSION

ILLUS. PL-58098A	PART NO.	NAME OF PART	AMT.
1	BB-021-59	Bearing - Ball	1
2	RR-012-21	Retaining Ring	1
3	WL-012-10	Lockwasher	1
4	NS-034-10	Lock Nut	1
5	NS-034-08	Lock Nut - N.D. #N-07	1
6	WL-012-08	Lockwasher	1
7	RR-004-24	Retaining Ring	1
8	BB-021-56	Bearing - Ball	1
9	00-875419-00079	Key 5/16 x 5/16 x 1-1/2	1
10	00-875419-00078	Key - Chamfered (ML-134306, ML-134322, ML-134354, & ML-134355)	1
11	00-916178	Shaft - Input	1
12	BB-018-22	Bearing - Ball	1
13	RR-009-07	Retaining Ring	1
14	00-874564	Spacer - Upper (Without Att. Hub)	1
15	00-874565	Spacer - Lower (Without Att. Hub)	1
16	00-875419-00079	Key 5/16 x 5/16 x 1-1/2	1
17	00-874448	Gear	1
18	00-874454	Seal - Oil	1
19	00-875855	Shaft - Planetary (ML-134306, ML-134322, ML-134354, & ML-134355)	1
20	00-874452	Shaft - Planetary (ML-134300, ML-134334, ML-134337, & ML-134361)	1
21	00-875419-00078	Key - Chamfered (ML-134306, ML-134322, ML-134354, & ML-134355)	1
22	00-875419-00066	Key - Chamfered (ML-134300, ML-134334, ML-134337, & ML-134361)	1
23	00-064467	Spacer - Upper (Lower Planetary) (ML-134306, ML-134322, ML-134354, & ML-134355)	1
24	00-067900	Spacer - Upper (Lower Planetary) (ML-134300, ML-134334, ML-134337, & ML-134361)	1
25	BB-007-07	Ball Bearing - Sgl. Rod (ML-134306, ML-134322, ML-134354, & ML-134355)	1
26	BB-021-49	Bearing - Ball Sgl. Rod (ML-134300, ML-134334, ML-134337, & ML-134361)	1
27	00-875858	Spacer - Lower (Lower Planetary) (ML-134306, ML-134322, ML-134354, & ML-134355)	1
28	00-874567	Spacer - Lower (Lower Planetary) (ML-134300, ML-134334, ML-134337, & ML-134361)	1
29	00-875857	Carrier - Lower Bearing (ML-134306, ML-134322, ML-134354, & ML-134355)	1
30	00-874451	Carrier - Lower Bearing (ML-134300, ML-134334, ML-134337, & ML-134361)	1
31	BR-003-11	Bearing - Roller Cone (ML-134306, ML-134322, ML-134354, & ML-134355)	1
32	BR-002-31	Roller Bearing - Cup & Cone Assy. (ML-134300, ML-134334, ML-134337, & ML-134361)	1
33	00-064386	Gear - Sun (ML-134306, ML-134322, ML-134354, & ML-134355)	1
34	00-067904	Gear - Sun (ML-134300, ML-134334, ML-134337, & ML-134361)	1
35	RR-004-14	Retaining Ring (ML-134306, ML-134322, ML-134354, & ML-134355)	1
36	RR-011-96	Retaining Ring (ML-134300, ML-134334, ML-134337, & ML-134361)	1
37	WL-003-48	Lockwasher 5/16 High Collar	6
38	SC-123-75	Cap Screw 5/16-18 x 3/4 Socket Fil. Hd	6
39	00-917804	Seal - Oil (Starting S/N 311411654 for HL800 and S/N 311412425 for HL1400)	1
40	SL-005-17	Spring - Wave	1

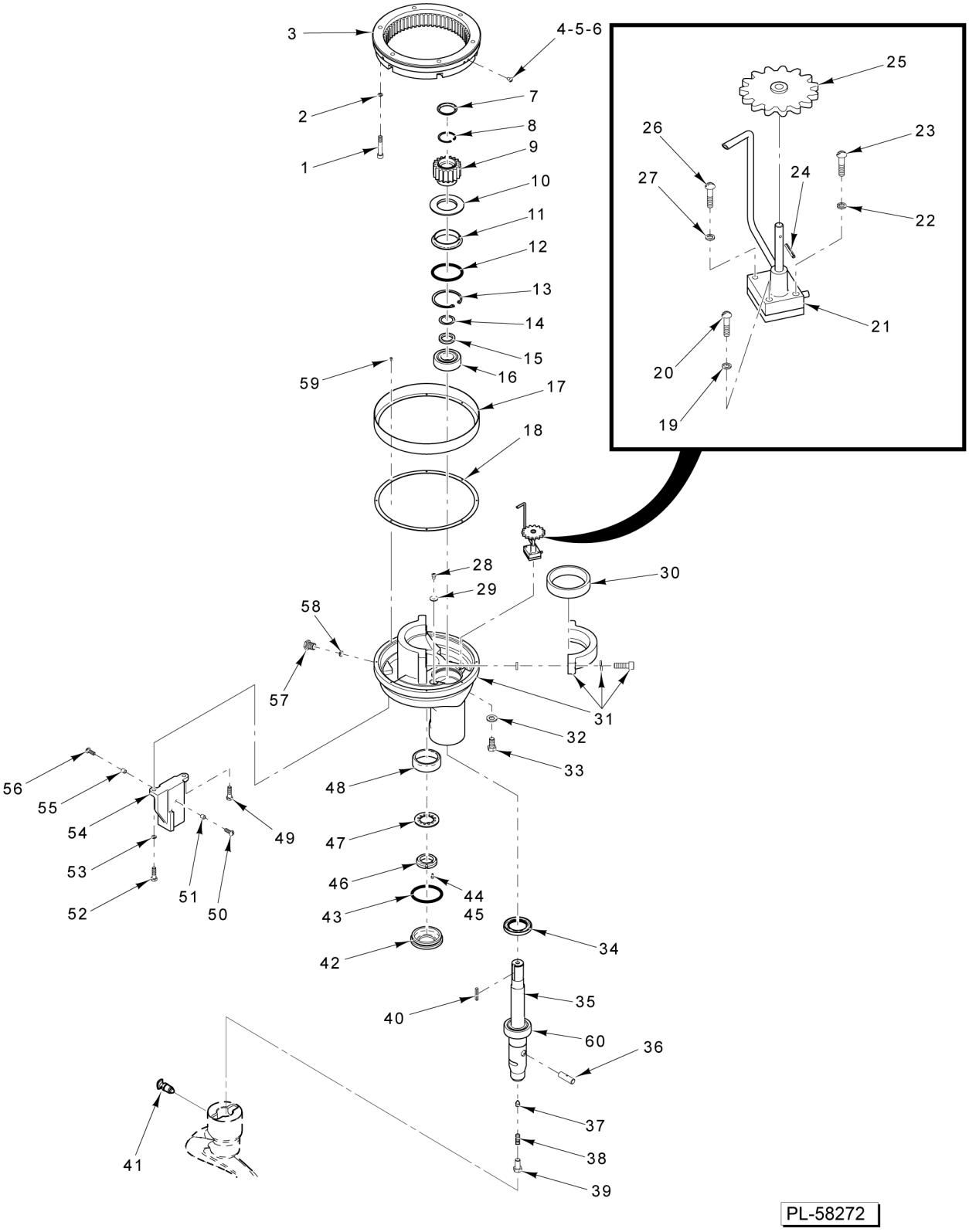

PLANETARY
(HL800 SERIES)
(ML-134306, ML-134322, ML-134354, & ML-134355)

PLANETARY
(HL800 SERIES)
(ML-134306, ML-134322, ML-134354, & ML-134355)

ILLUS. PL-58272	PART NO.	NAME OF PART	AMT.
1	SC-040-27	Cap Screw 3/8-16 x 2-1/4 Hex Socket Hd	6
2	WL-019-92	Lockwasher 3/8 Helical	6
3	00-438121	Gear - Internal (59T)	1
4	SC-128-74	Mach. Screw 1/4-20 x 5/8 Tx. Button Hd. (SST) (ML-134322 & ML-134355)	3
5	SC-021-39	Mach. Screw 1/4-20 x 5/8 Slotted Rd. Hd. (SST) (ML-134306 & ML-134354)	3
6	SC-128-80	Mach. Screw 1/4-20 x 3/8 Tx. Button Hd. (SST) (ML-134355)	3
7	00-060071	Cap - Oil Retaining	1
8	RR-005-08	Retaining Ring	1
9	00-064732	Internal Pinion & Deflector Assy. (18T) (Incls. Item 10)	1
10	00-065372	NLA - Obsolete--Deflector - Oil	1
11	00-073011	Baffle - Planetary Oil	1
12	00-067500-00021	O-Ring	1
13	RR-004-24	Retaining Ring	1
14	00-060768	Shim - Internal Pinion	1
15	00-065408	Spacer - Agitator Shaft	1
16	BB-006-36	Ball Bearing	1
17	00-064478	Extension	1
18	00-064464	Gasket	1
19	WL-003-22	Lockwasher #10 Light	2
20	SC-009-51	Mach. Screw 10-32 x 7/8 Slotted Rd. Hd	2
21	00-290232-00002	Pump Assy. - Oil (Incls. Items 22 thru 27)	1
22	WL-003-22	Lockwasher #10 Light	1
23	SC-060-87	Mach. Screw 10-32 x 3/4 Slotted Rd. Hd. (SST)	1
24	RP-002-08	Roll Pin 5/64 Dia. x 11/16 Lg	1
25	00-064614	Gear - Drive Assy	1
26	SC-009-68	Mach. Screw 8-32 x 3/4 Slotted Rd. Hd	1
27	WL-003-15	Lockwasher #8 Light	1
28	SC-011-72	Mach. Screw 1/4-20 x 3/8 Slotted Phil. Hd	2
29	WS-003-46	Washer	2
30	BR-003-12	Bearing - Roller Cap	1
31	00-916068	Planetary Assy. (Incls. Items 52, 53, 54, & Bearing Cap)	1
32	WS-021-20	Washer (Nylon)	1
33	SC-129-38	Cap Screw 7/16-20 x 1 Hex Hd. (SST)	1
34	00-916065	Seal - Oil	1
35	00-916048	Shaft - Agitator	1
36	00-873953	Pin - Agitator Shaft	1
37	00-007744	Set Screw Hdls., Cone Pt	1
38	SC-047-41	Set Screw 3/8-16 x 3/8 Hex Hdls., Cup Pt	1
39	00-064723	Plug - Agitator Shaft	1
40	00-875958	Key - Chamfered	1
41	00-874145	Plunger Assy	1
42	00-437496-00002	Cap - Seal (Painted)	1
43	00-067500-00021	O-Ring	1
44	00-065277	Cap Screw Socket Hd	1
45	WL-003-15	Lockwasher #8 Light	1
46	00-065275	Bearing - Special Lock Nut	1
47	00-064982	Washer - Tongue	1
48	BR-002-15	Roller Bearing - Cup & Cone Assy	1
49	SC-047-49	Set Screw 3/8-16 x 1-3/4 Hex Hdls., Cup Pt	1
50	SC-021-54	Mach. Screw 5/16-18 x 7/8 Slotted Rd. Hd. (SST)	1
51	00-874181	Spacer - Scraper Arm	1
52	SC-041-31	Cap Screw 3/8-16 x 1-1/4 Hex Hd. (SST)	1
53	WL-006-28	Lockwasher 3/8 Helical	1
54	00-873284-00002	Bracket - Bowl Scraper	1
55	00-874181	Spacer - Scraper Arm	1

PLANETARY
(HL800 SERIES)
(ML-134306, ML-134322, ML-134354, & ML-134355)

ILLUS. PL-58272	PART NO.	NAME OF PART	AMT.
56	SC-021-54	Mach. Screw 5/16-18 x 7/8 Slotted Rd. Hd. (SST)	1
57	00-064465-00001	Plug - Oil Fill	1
58	WS-021-20	Washer (Nylon)	1
59	SC-009-70	Mach. Screw 6-32 x 1/4 Slotted Rd. Hd.	8
60	BB-007-39	Ball Bearing - M.R.C. #207-SZZ	1

NOTES

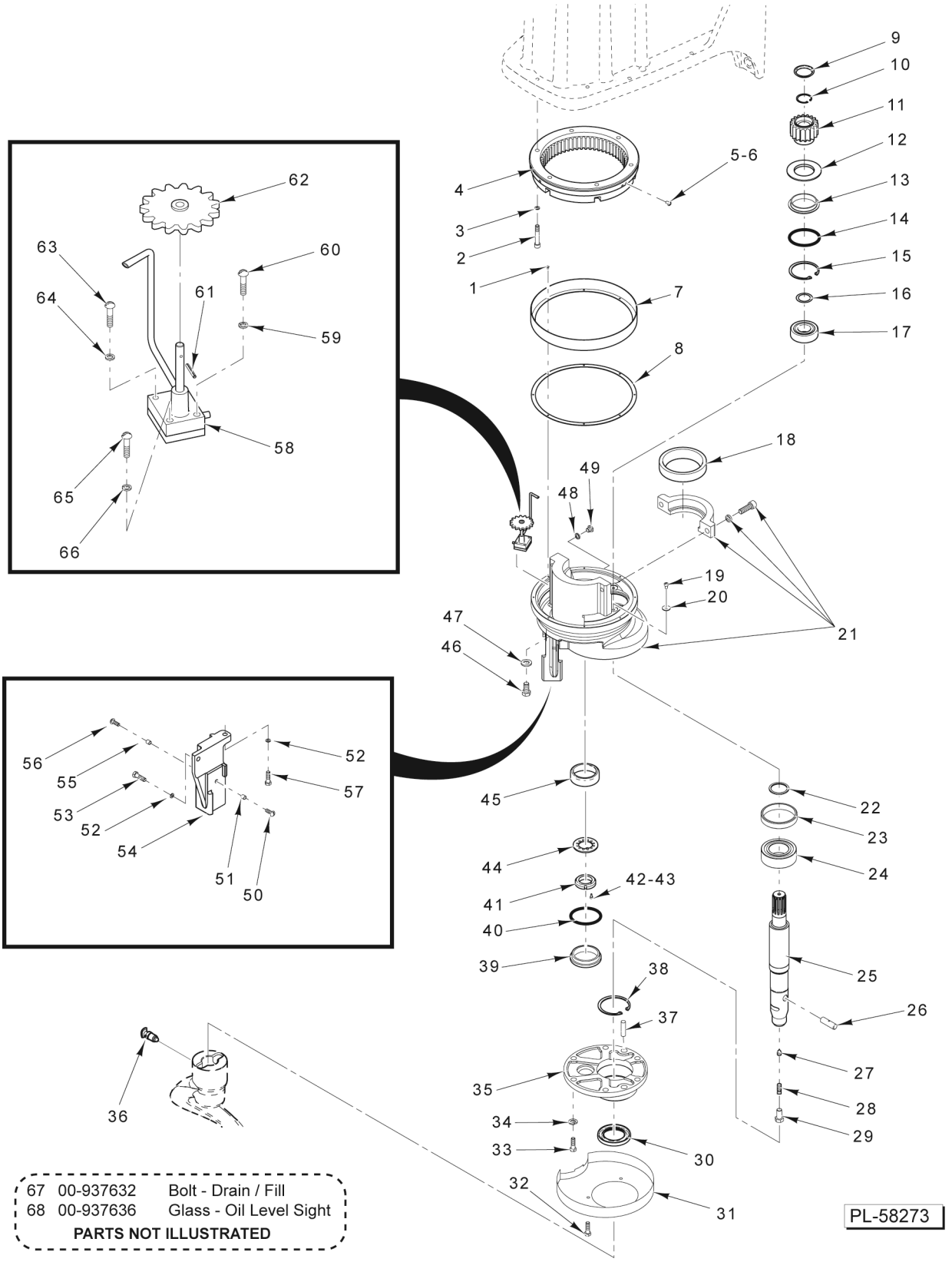

PLANETARY
(HL1400 SERIES)
(ML-134300, ML-134334, ML-134337, & ML-134361)

PLANETARY
(HL1400 SERIES)
(ML-134300, ML-134334, ML-134337, & ML-134361)

ILLUS. PL-58273	PART NO.	NAME OF PART	AMT.
1	SC-009-70	Mach. Screw 6-32 x 1/4 Slotted Rd. Hd.	8
2	SC-040-28	Cap Screw 3/8-16 x 2-1/2 Hex Socket Hd.	6
3	WL-019-92	Lockwasher 3/8 Helical	6
4	00-438050	Gear - Internal	1
5	SC-021-37	Mach. Screw 1/4-20 x 3/8 Slotted Rd. Hd. (SST) (ML-134300, ML-134334, & ML-134361)	3
6	SC-128-80	Mach. Screw 1/4-20 x 3/8 Tx. Button Hd. (SST) (ML-134337)	3
7	00-064478	Extension	1
8	00-064464	Gasket	1
9	00-060071	Cap - Oil Retaining	1
10	RR-006-08	Retaining Ring	1
11	00-067886	Pinion - Internal (18T) (Incls. Item 12)	1
12	00-065372	NLA - Obsolete--Deflector - Oil	1
13	00-073011	Baffle - Planetary Oil	1
14	00-067500-00021	O-Ring	1
15	RR-004-24	Retaining Ring	1
16	00-068277	Shim - Internal Pinion	1
17	BB-021-56	Bearing - Ball	1
18	BR-002-31	Roller Bearing - Cup & Cone Assy	1
19	SC-011-72	Mach. Screw 1/4-20 x 3/8 Slotted Phil. Hd.	2
20	WS-003-46	Washer	2
21	00-874690-00002	Planetary Assy. (Incls. Bearing Cap) (Must Also Order Items 67 & 68)	1
22	00-067902	Spacer - Agitator Shaft	1
23	00-067903	Locator - Bearing	1
24	BB-021-55	Bearing - Ball	1
25	00-916037	Shaft - Agitator	1
26	00-873953	Pin - Agitator Shaft	1
27	00-007744	Set Screw Hdls., Cone Pt.	1
28	SC-047-41	Set Screw 3/8-16 x 3/8 Hex Hdls., Cup Pt.	1
29	00-064723	Plug - Agitator Shaft	1
30	00-068045	Seal - Planetary Oil	1
31	00-874669	Cover - Planetary	1
32	00-080531	Screw - Nylok Hex Hd.	2
33	SC-120-28	Cap Screw 1/2-13 x 2 Hex Hd.	6
34	WL-004-11	Lockwasher 1/2 Helical	6
35	00-067921-00001	Plate - Bearing	1
36	00-874145	Plunger Assy.	1
37	00-011800-00237	Dowel	2
38	RR-006-07	Retaining Ring	1
39	00-437496-00002	Cap - Seal (Painted)	1
40	00-067500-00021	O-Ring	1
41	00-065275	Bearing - Special Lock Nut	1
42	00-065277	Cap Screw Socket Hd.	1
43	WL-003-15	Lockwasher #8 Light	1
44	00-064982	Washer - Tongue	1
45	BR-002-15	Roller Bearing - Cup & Cone Assy	1
46	SC-129-38	Cap Screw 7/16-20 x 1 Hex Hd. (SST)	1
47	WS-021-20	Washer (Nylon)	1
48	WS-021-20	Washer (Nylon)	1
49	00-064465-00001	Plug - Oil Fill	1
50	SC-021-54	Mach. Screw 5/16-18 x 7/8 Slotted Rd. Hd. (SST)	1
51	00-874181	Spacer - Scraper Arm	1
52	WL-006-28	Lockwasher 3/8 Helical	1
53	SC-041-49	Cap Screw 3/8-16 x 1 Hex Hd. (SST)	1
54	00-874649-00002	Bracket - Bowl Scraper	1
55	00-874181	Spacer - Scraper Arm	1

PLANETARY
(HL1400 SERIES)
(ML-134300, ML-134334, ML-134337, & ML-134361)

ILLUS. PL-58273	PART NO.	NAME OF PART	AMT.
56	SC-021-54	Mach. Screw 5/16-18 x 7/8 Slotted Rd. Hd. (SST)	1
57	SC-041-31	Cap Screw 3/8-16 x 1-1/4 Hex Hd. (SST)	1
58	00-290232-00002	Pump Assy. - Oil (Incls. Items 59, 60, & 61)	1
59	WL-003-22	Lockwasher #10 Light	1
60	SC-060-87	Mach. Screw 10-32 x 3/4 Slotted Rd. Hd. (SST)	1
61	RP-002-08	Roll Pin 5/64 Dia. x 11/16 Lg.	1
62	00-064614	Gear - Drive Assy.	1
63	SC-009-68	Mach. Screw 8-32 x 3/4 Slotted Rd. Hd.	1
64	WL-003-15	Lockwasher #8 Light	1
65	SC-009-51	Mach. Screw 10-32 x 7/8 Slotted Rd. Hd.	2
66	WL-003-22	Lockwasher #10 Light	2
67	00-937632	Bolt - Drain / Fill (Order with Item 21)	1
68	00-937636	Glass - Oil Level Sight Glass (Order with Item 21)	1

NOTES

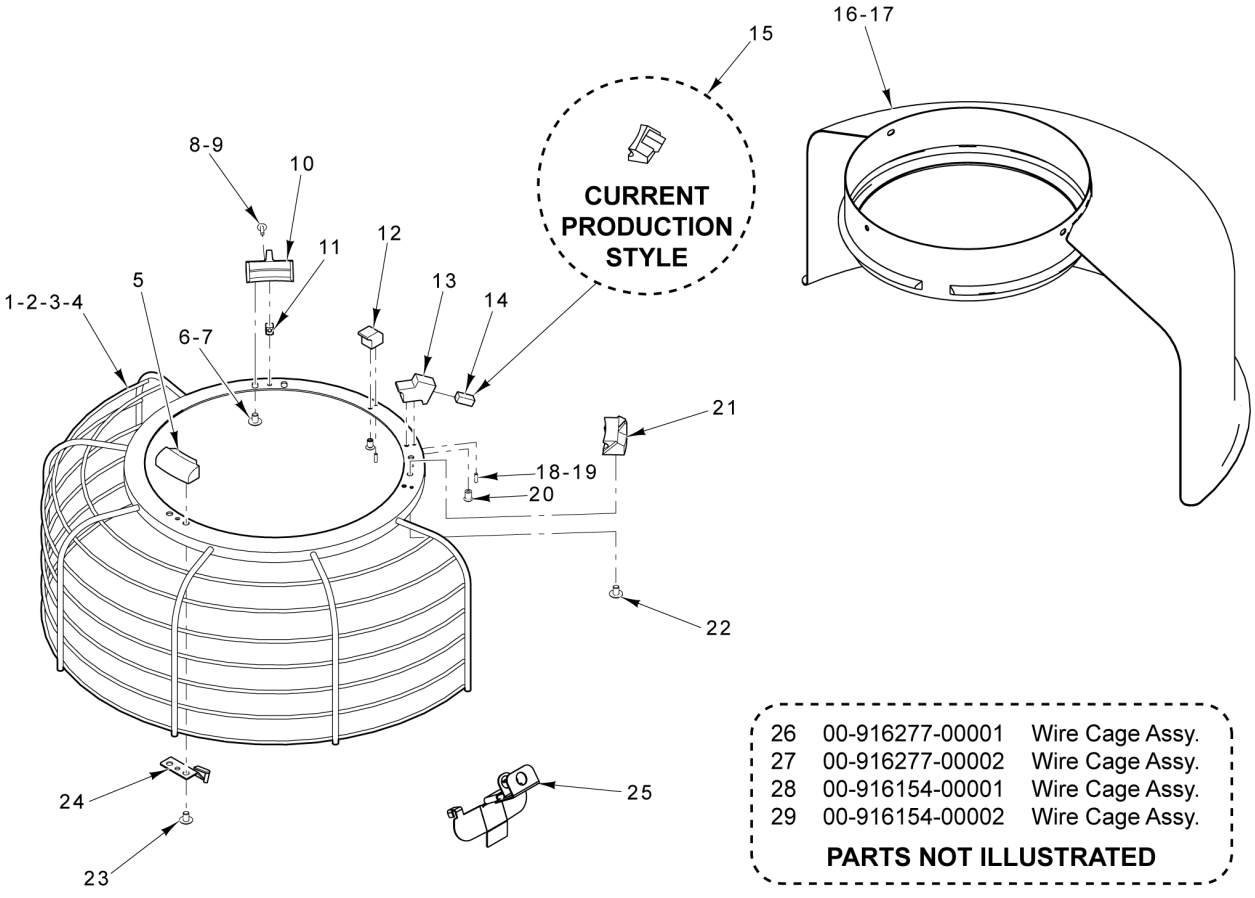

26	00-916277-00001	Wire Cage Assy.
27	00-916277-00002	Wire Cage Assy.
28	00-916154-00001	Wire Cage Assy.
29	00-916154-00002	Wire Cage Assy.

PARTS NOT ILLUSTRATED

***All Costco Units Utilize Current Production**

PL-58269

BOWL GUARD

BOWL GUARD

ILLUS. PL-58269	PART NO.	NAME OF PART	AMT.
1	00-916155-00001	Wire - Cage Weldment (ML-134306 & ML-134354)	1
2	00-916155-00002	Wire - Cage Weldment (ML-134322 & ML-134355)	1
3	00-874953-00001	Wire - Cage Weldment (ML-134300, ML-134334, & ML-134361)	1
4	00-874953-00002	Wire - Cage Weldment (ML-134337)	1
5	00-874126	Shoe - Front	1
6	SC-122-45	Mach. Screw 1/4-20 x 3/8 Slotted Truss Hd	6
7	SC-128-65	Mach. Screw 1/4-20 x 1/2 Tx. Button Hd. (SST) (ML-134322 & ML-134355)	6
8	SC-123-07	Mach. Screw 8-32 x 1/2 Slotted Truss Hd. (ML-134300, ML-134306, ML-134334, ML-134354, & ML-134361)	1
9	SC-128-66	Mach. Screw 8-32 x 3/8 Tx. Button Hd. (ML-134322, ML-134337, & ML-134355)	1
10	00-437433-00003	Shoe - Adjustable	1
11	00-437720	Key - Shoe	1
12	00-438055	Bumper - Cage	1
13	00-437442	Retainer - Magnet	1
14	00-111941	Magnet (Previous Production Style)	1
15	00-874127	Shoe - Fixed (With Magnet) (Current Production Style)	1
16	00-916152	Guard - Splash & Drip (HL800)	1
17	00-874951	Splash Guard & Drip Cup (HL1400)	1
18	SC-122-44	Mach. Screw 8-32 x 3/8 Slotted Truss Hd. (ML-134300, ML-134306, ML-134334, ML-134354, & ML-134361)	2
19	SC-121-71	Mach. Screw 8-32 x 3/8 Tx. Button Hd. (SST) (ML-134322, ML-134337, & ML-134355)	2
20	SC-009-68	Mach. Screw 8-32 x 3/4 Slotted Rd. Hd	2
21	00-437433-00002	Shoe - Fixed	1
22	SC-122-45	Mach. Screw 1/4-20 x 3/8 Slotted Truss Hd	2
23	SC-122-45	Mach. Screw 1/4-20 x 3/8 Slotted Truss Hd	4
24	00-875795	Stop - Cage	1
25	00-938796	Bracket - Water Dispenser	1
26	00-916277-00001	Wire Cage Assy. (ML-134334, ML-134300, & ML-134361)	1
27	00-916277-00002	Wire Cage Assy. (ML-134337)	1
28	00-916154-00001	Wire Cage Assy. (ML-134306 & ML-134354)	1
29	00-916154-00002	Wire Cage Assy. (ML-134322 & ML-134355)	1

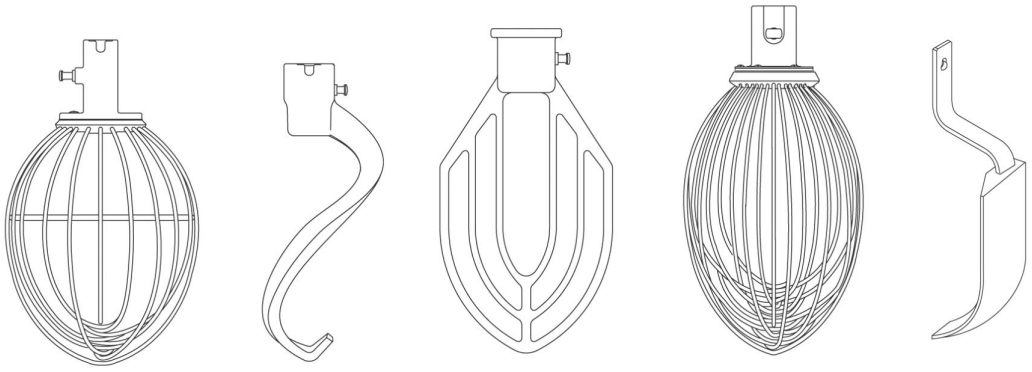

1 2 3 4 5-6

40-QUART AGITATORS

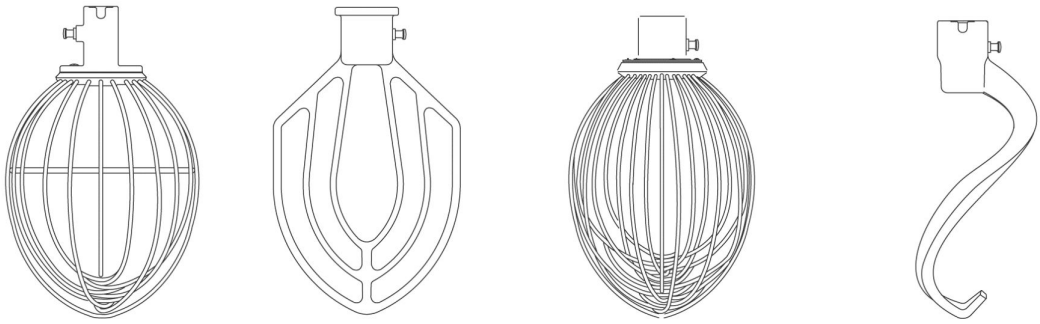

7 8 9 10

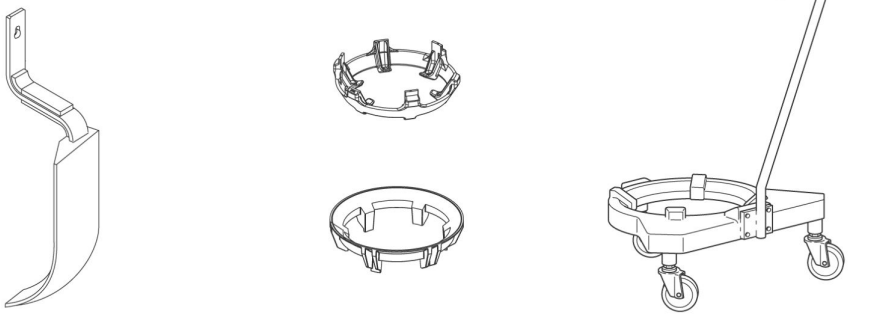

11-12 13-14 15 THRU 18

BOWL TRUCK

PL-58292

AGITATORS AND ACCESSORIES (40 & 60 QUART)

AGITATORS AND ACCESSORIES
(40 & 60 QUART)

ILLUS. PL-58292	PART NO.	NAME OF PART	AMT.
1	00-916321	"I" Wire Whip (40 Quart) (Packaged)	1
2	00-916316	"ED" Dough Arm (40 Quart) (Packaged)	1
3	00-916313	"B" Flat Beater (40 Quart) (Packaged)	1
4	00-916319	"D" Wire Whip (40 Quart) (Packaged)	1
5	00-874268	Bowl Scraper (40 Quart) (Packaged) (Incls. Item 6)	1
6	00-435637-00004	Scraper - Bowl (40 Qt.)	1
7	00-916268	"I" Wire Whip (60 Quart) (Packaged)	1
8	00-916257	"B" Flat Beater (60 Quart) (Packaged)	1
9	00-916265	"D" Wire Whip (60 Quart) (Packaged)	1
10	00-916260	"ED" Dough Arm (60 Quart) (Packaged)	1
11	00-874267	Bowl Scraper (60 Quart) (Packaged) (Incls. Item 12)	1
12	00-435637-00001	Scraper - Bowl (60 Qt.)	1
13	00-916493	Bowl Truck Adapter (60-80-140 Quart) (Packaged)	1
14	00-916495	Bowl Truck Adapter (40-60 Quart) (Packaged)	1
15	00-873307	Bowl Truck (Packaged) (ML-134306, ML-134322, ML-134354, & ML-134355)	1
16	00-873308	Bowl Truck (Packaged) (ML-134300, ML-134334, & ML-134337)	1
17	00-874288	Caster - Bowl Truck	3
18	00-916585	Bowl Truck (Packaged)	1
	00-433047	Ingredient Chute (Packaged)	1

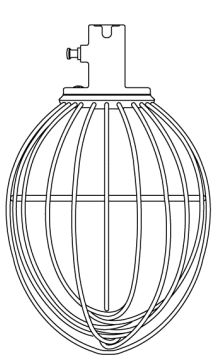
1

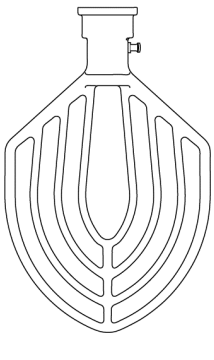
2

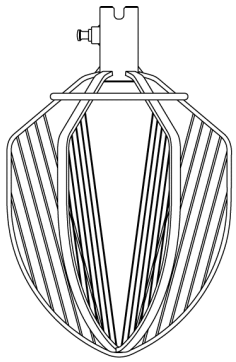
3

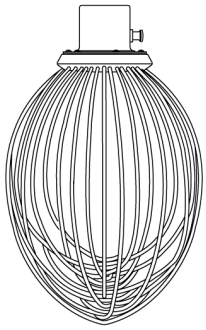
4

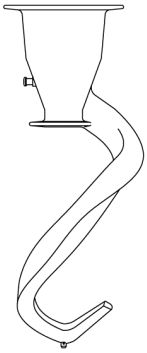
5

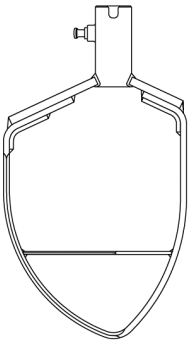
6

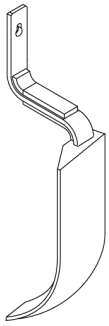
7-8


9-10

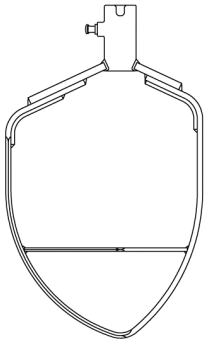
11

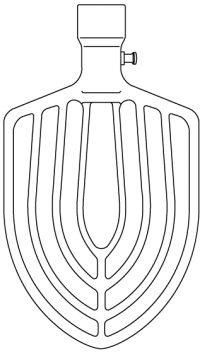
12-13

80-QUART AGITATORS

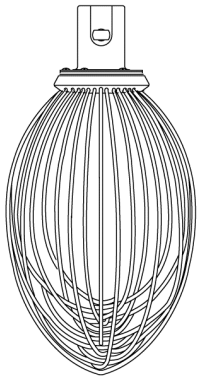
14

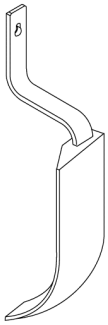
15-16

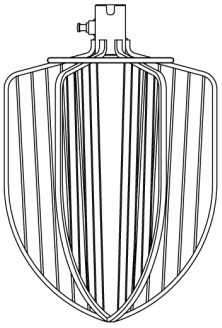
17

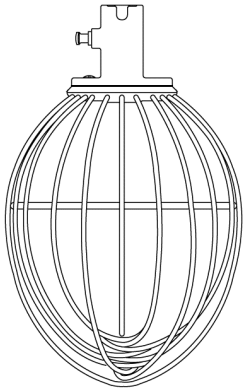
18

140-QUART AGITATORS

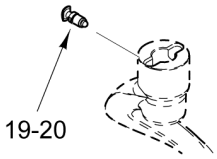
19-20

PL-60162

AGITATORS AND ACCESSORIES
(80 & 140 QUART)

AGITATORS AND ACCESSORIES (80 & 140 QUART)

ILLUS. PL-60162	PART NO.	NAME OF PART	AMT.
1	00-875931	"I" Wire Whip (80 Quart) (Packaged) (Incls. Item 19)	1
2	00-874654	"B" Beater (80 Quart) (Packaged) (Incls. Item 19)	1
3	00-875946	"C" Wire Whip (80 Quart) (Packaged) (Incls. Item 19)	1
4	00-875866	"D" Wire Whip (80 Quart) (Packaged) (Incls. Item 19)	1
5	00-874647	"ED" Dough Arm (80 Quart) (Packaged) (Incls. Item 19)	1
6	00-875914	Pastry Knife (80 Quart) (Packaged) (Incls. Item 19)	1
7	00-874700	Bowl Scraper (80 Quart) (Packaged) (Incls. Item 8)	1
8	00-435637-00002	Scraper - Bowl (80 Qt.)	1
9	00-875847	"ED" Dough Arm (140 Quart) (Packaged) (Incls. Item 19)	1
10	00-916316	"ED" Dough Arm (40 Quart) (Packaged) (Incls. Item 19)	1
11	00-875906	Pastry Knife (140 Quart) (Packaged) (Incls. Item 19)	1
12	00-874409	"B" Flat Beater (Alum.) (140 Quart) (Packaged) (Incls. Item 19)	1
13	00-937382	"B" Flat Beater (SST) (140 Quart) (Packaged) (Incls. Item 20)	1
14	00-875863	"D" Wire Whip (140 Quart) (Packaged) (Incls. Item 19)	1
15	00-874699	Bowl Scraper (140 Quart) (Packaged) (Incls. Item 16)	1
16	00-435637-00003	Scraper - Bowl (140 Quart)	1
17	00-875938	"C" Wire Whip (140 Quart) (Packaged) (Incls. Item 19)	1
18	00-875929	"I" Wire Whip (140 Quart) (Packaged)	1
19	00-874145	Plunger Assy	1
20	00-937460	Plunger Assy (SST)	1

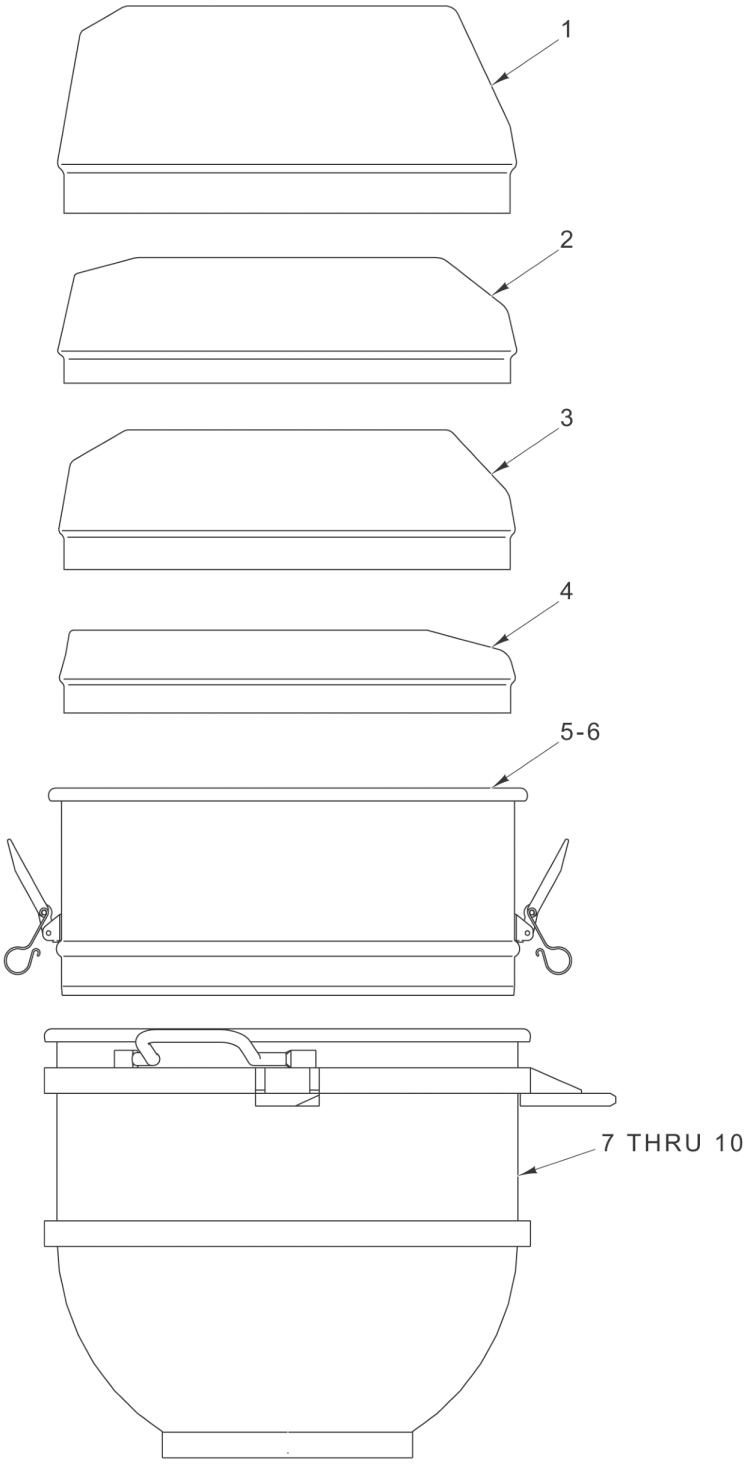

BOWL AND EXTENSIONS

BOWL AND EXTENSIONS

ILLUS. PL-57889	PART NO.	NAME OF PART	AMT.
1	00-438081	Splash Cover (40 Quart) (Packaged)	1
2	00-438082	Splash Cover (60 Quart) (Packaged)	1
3	00-438083	Splash Cover (80 Quart) (Packaged)	1
4	00-438084	Splash Cover (140 Quart) (Packaged)	1
5	00-438104-00004	Bowl Extension Assy. (60 Quart) (Packaged)	1
6	00-438104-00002	Bowl Extension Assy. (80 Quart) (Packaged)	1
7	00-916175	Bowl Assy. (40 Quart) (Packaged)	1
8	00-916174	Bowl Assy. (60 Quart) (Packaged)	1
9	00-875846	Bowl Assy. (80 Quart) (Packaged)	1
10	00-875845	Bowl Assy. (140 Quart) (SST) (Packaged)	1
	00-917344	Bowl Adapter Assy. (140-80 Quart) (Packaged)	1
	00-917345	NLA - Obsolete--Bowl Adapter Assy. (80-60 Quart) (Packaged)	1
	00-917346	Bowl Adapter Assy. (80-40 Quart) (Packaged)	1

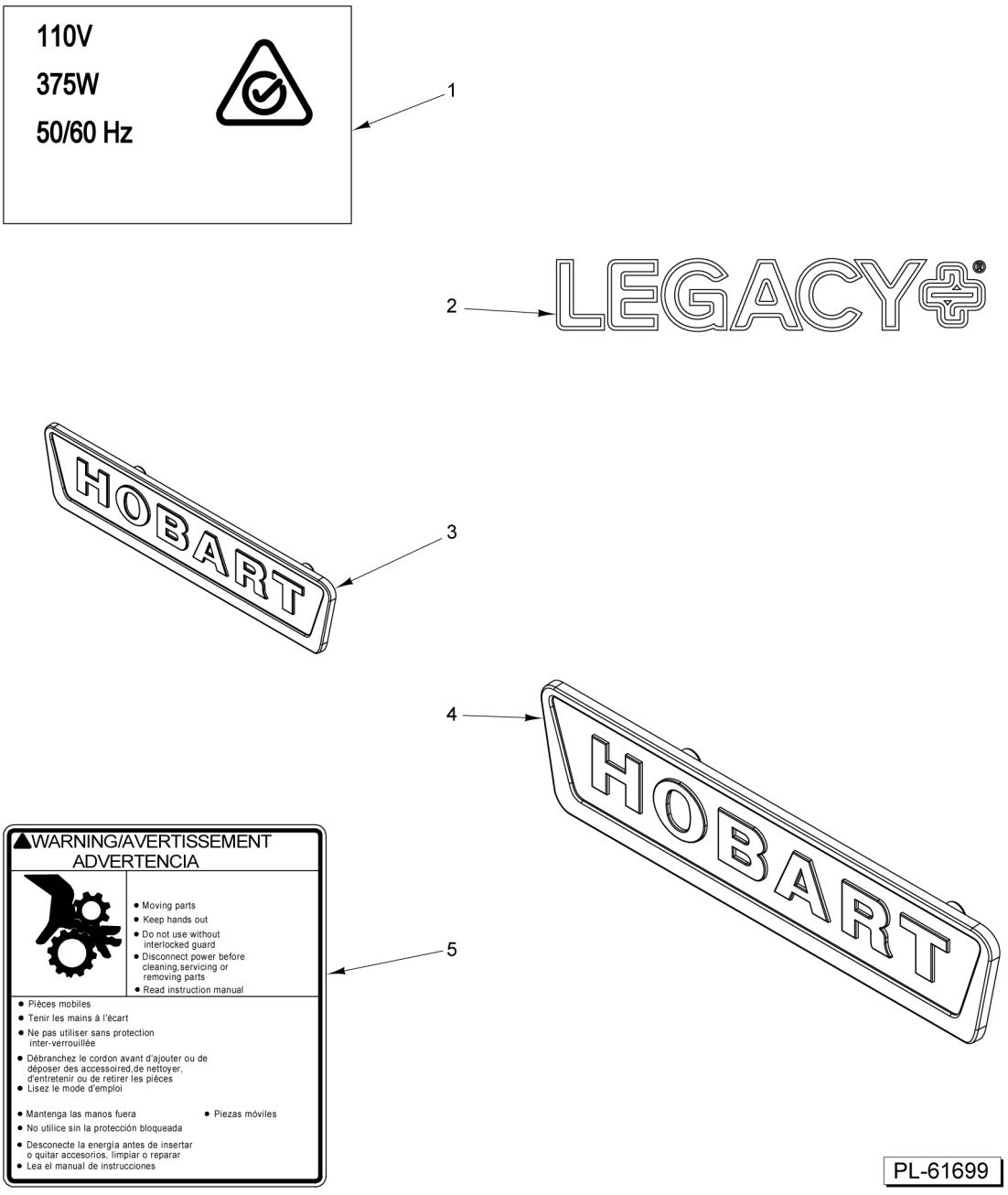

LABELS AND NAMEPLATES

LABELS AND NAMEPLATES

ILLUS. PL-61699	PART NO.	NAME OF PART	AMT.
1	00-938577	Label, RCM (Australia)	AR
2	00-938643	Label, Legacy "+" Medium	AR
3	00-938666	Nameplate - Hobart (Medium)	AR
4	00-938667	Nameplate, Hobart, Zinc XLarge R80	AR
5	00-916957-00065	Label - Moving Parts (Trilingual)	AR