HOBART

CATALOG OF REPLACEMENT PARTS



HL800/HL1400CE/AUS SERIES LEGACY MIXER

HL800CE

ML-134356

HL800AUS

ML-134357

HL1400CE

ML-134335

HL1400AUS

ML-134336

PRIOR MLS COVERED IN THIS MANUAL

HL800CE

ML-134319

HL800AUS

ML-134326

HL1400CE

ML-134320

HL1400AUS

ML-134330

A product of HOBART 701 S. RIDGE AVENUE TROY, OHIO 45374-0001

FORM 43126 Rev. D (January 2021)

 © HOBART 2021

Table of Contents

5 CONTROL PANEL

7 ELECTRICAL COMPONENTS (HL800 SERIES) (ML-134319, ML-134326, ML-134356, & ML-134357)

9 ELECTRICAL COMPONENTS (HL1400 SERIES) (ML-134320, ML-134330, ML-134335, & ML-134336)

11 BASE AND PEDESTAL

13 BOWL SUPPORT

17 TRANSMISSION CASE AND MOTOR

21 TRANSMISSION

23 PLANETARY (HL800 SERIES) (ML-134319, ML-134326, ML-134356, & ML-134357)

25 PLANETARY (HL1400 SERIES) (ML-134320, ML-134330, ML-134335, & ML-134336)

29 BOWL GUARD

31 AGITATORS AND ACCESSORIES (40 & 60 QUART)

33 AGITATORS AND ACCESSORIES (80 & 140 QUART)

35 BOWL AND EXTENSIONS

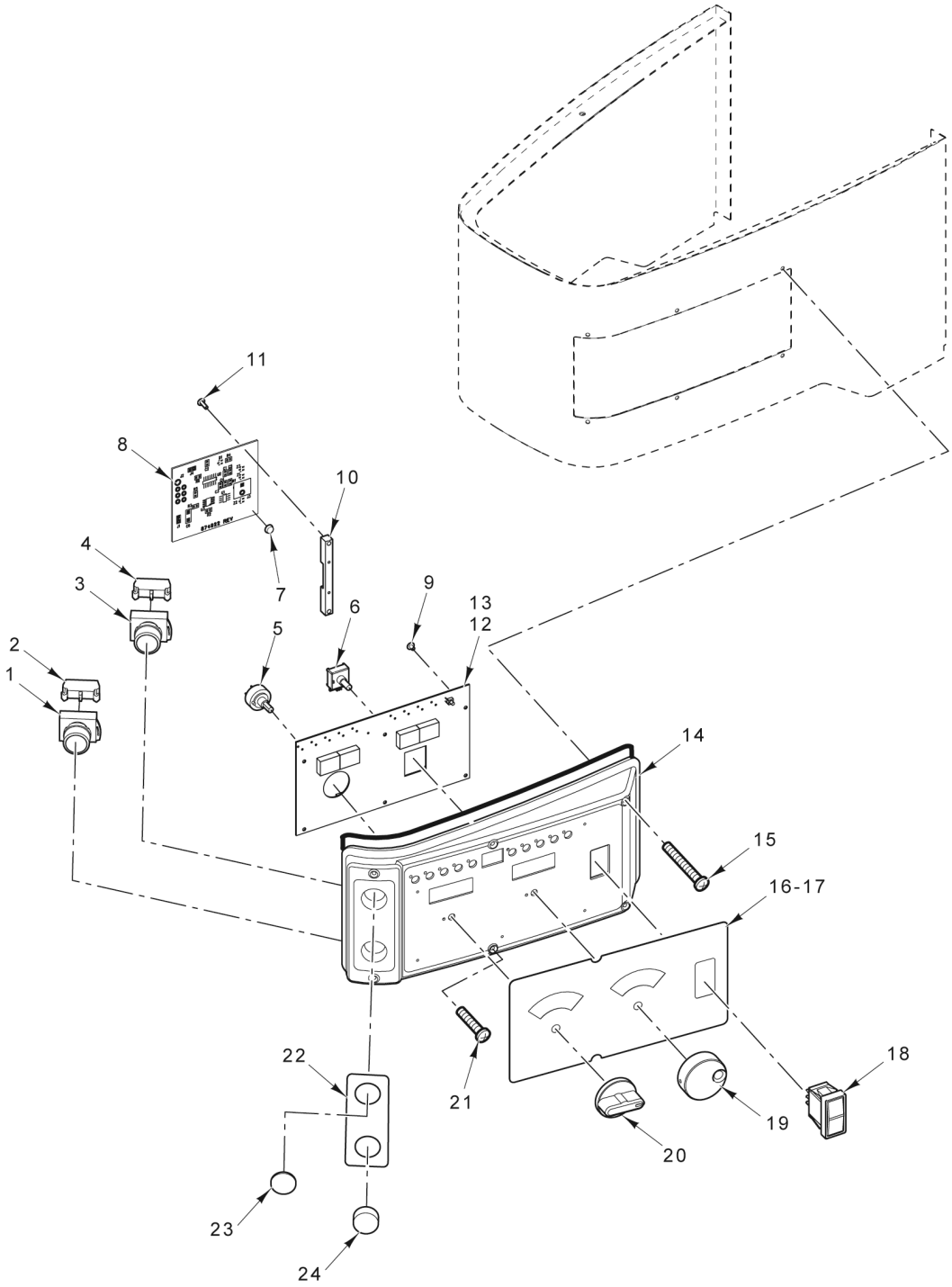

CONTROL PANEL

CONTROL PANEL

ILLUS. PL-57872	PART NO.	NAME OF PART	AMT.
1	00-478752-00002	Switch - Operator (Stop)	1
2	00-087711-322-3	Block - Contact (Stop)	1
3	00-478752-00001	Switch - Operator (Start)	1
4	00-087711-322-4	Block - Contact (Start)	1
5	00-874631	Selector - Switch Assy. (Speed Selector)	1
6	00-875723	Encoder Assy. (Time Selector)	1
7	00-916063	Bumper	1
*8	00-916818	Interface - Circuit Board Assy	1
9	SD-039-23	Self-Tapping Screw 6-32 x 1/4 Hex Washer Hd., Type RL	2
10	00-916061	Block - Interface	1
11	SD-038-49	Self-Tapping Screw 6-32 x 1/2 Hex Washer Hd., Type RL	2
12	00-916803	PCB Assy. (Timer Board)	1
13	00-916804	PCB Assy. (Timer Board) (With Recipe Timer)	1
14	00-873945	Panel - Control	1
15	SC-128-40	Mach. Screw 8-32 x 2-1/4 Phil. Oval Hd. (SST)	2
16	00-916233	Label - Overlay	1
17	00-916234	Label - Overlay (With Recipe Timer)	1
18	00-087711-330-1	Switch - Rocker (Bowl Lift)	1
19	00-875724	Knob - Timer	1
20	00-874630	Knob - Speed Selector	1
21	SC-128-39	Mach. Screw 8-32 x 1-1/2 Phil. Oval Hd. (SST)	4
22	00-875963	Label (Mix/Stop)	1
23	00-478753-00001	Cap - Round Push Button (Flush)	1
24	00-478751-00001	Cap - Round Push Button (Extended)	1

* Prior ML's - Order Kit 00-917037

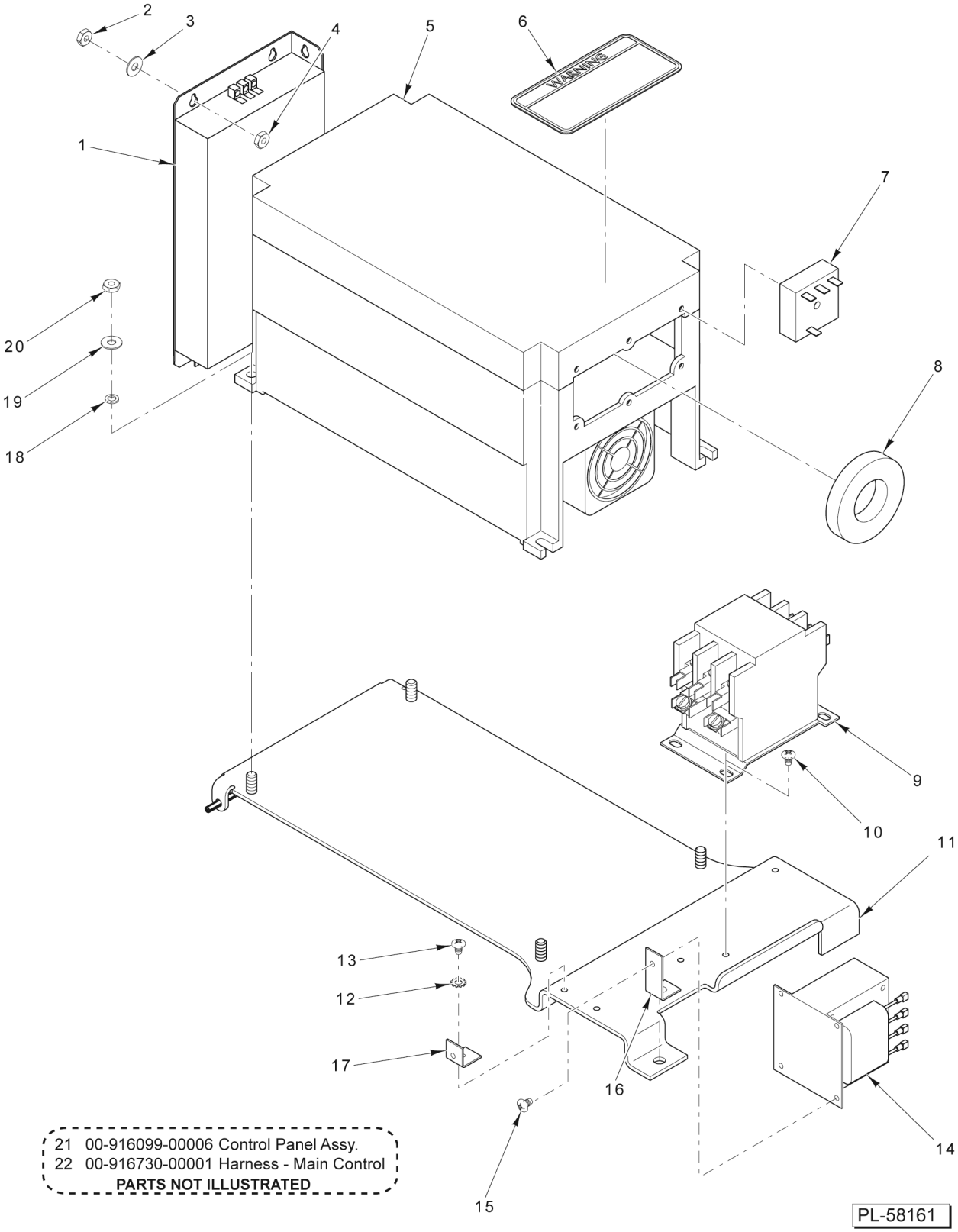

ELECTRICAL COMPONENTS
(HL800 SERIES)
(ML-134319, ML-134326, ML-134356, & ML-134357)

ELECTRICAL COMPONENTS
(HL800 SERIES)
(ML-134319, ML-134326, ML-134356, & ML-134357)

ILLUS. PL-58161	PART NO.	NAME OF PART	AMT.
1	00-916327-00001	Filter - Powerline	1
2	NS-013-01	Nut 1/4-20 Hex	2
3	WS-003-43	Washer	7
4	NS-038-04	Lock Nut 1/4-20	3
*5	00-916184-00004	Drive - Controller (460 V.)	1
6	00-438131-00180	Label - Warning	1
7	00-916642	Relay - Time Delay	1
8	00-916185-00001	Ferrite	1
9	00-087713-107-5	Contactor (30 Amp./Aux., 3 Ph.)	1
10	SD-015-39	Self-Tapping Screw 8-32 x 1/4 Phil. Pan Hd., Type TT	2
11	00-916098	NLA - Obsolete--Plate - Drive Mount Assy	1
12	WL-007-06	Lockwasher #8 External	1
13	SD-015-39	Self-Tapping Screw 8-32 x 1/4 Phil. Pan Hd., Type TT	1
14	00-916588	Transformer (460 V.)	1
15	SD-015-20	Self-Tapping Screw 10-32 x 3/8 Phil. Pan Hd., Type TT	1
16	00-916587	Bracket - Transformer Front (460 V.) (ML-134334 & ML-134337)	1
17	00-916586	Bracket - Transformer (460 V.)	1
18	WS-002-51	Washer	4
19	WL-003-22	Lockwasher #10 Light	4
20	NS-009-22	Nut 10-24 Hex	4
21	00-916099-00006	Control Panel Assy. (460 V.) (Incls. Items 5 thru 20)	1
22	00-916730-00001	Harness - Main Control	1

* Prior ML's Order W/Motor Assy. 00-875995-00002

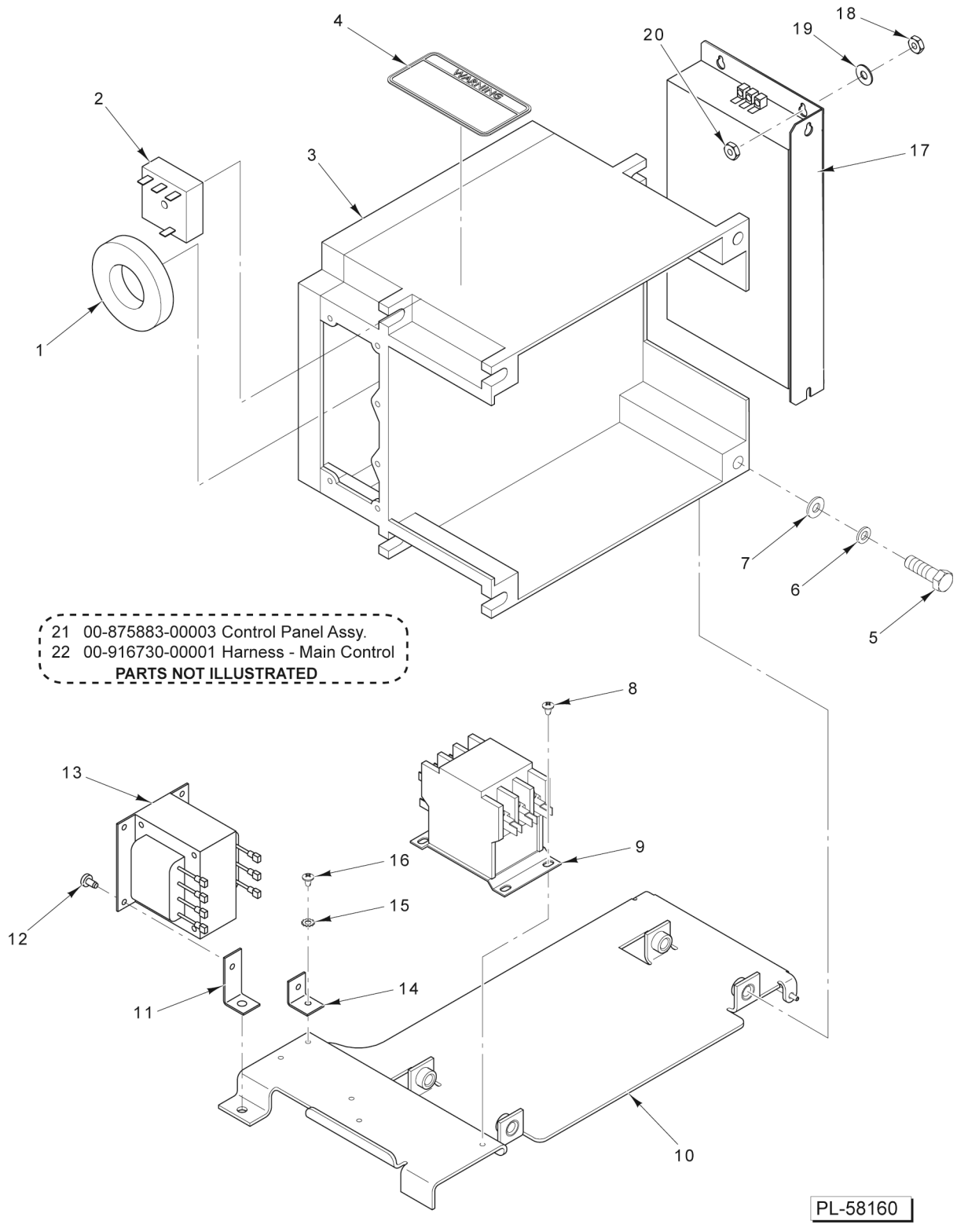

ELECTRICAL COMPONENTS
(HL1400 SERIES)
(ML-134320, ML-134330, ML-134335, & ML-134336)

ELECTRICAL COMPONENTS
(HL1400 SERIES)
(ML-134320, ML-134330, ML-134335, & ML-134336)

ILLUS. PL-58160	PART NO.	NAME OF PART	AMT.
1	00-916185-00001	Ferrite	1
2	00-916642	Relay - Time Delay	1
3	00-916183-00002	Drive - Controller (460 V.)	1
4	00-438131-00180	Label - Warning	1
5	SC-118-09	Cap Screw 3/8-16 x 1-1/4 Hex Hd	4
6	WL-004-02	Lockwasher 3/8 Helical	4
7	WS-006-36	Washer	4
8	SD-015-39	Self-Tapping Screw 8-32 x 1/4 Phil. Pan Hd., Type TT	2
9	00-087713-107-5	Contactor (30 Amp./Aux., 3 Ph.)	1
10	00-875974	NLA - Obsolete--Plate - Drive Mount Assy	1
11	00-916587	Bracket - Transformer (Front)	1
12	SD-015-39	Self-Tapping Screw 8-32 x 1/4 Phil. Pan Hd., Type TT	2
13	00-916588	Transformer Assy. (480 V.)	1
14	00-916586	Bracket - Transformer	1
15	WL-007-06	Lockwasher #8 External	1
16	SD-015-20	Self-Tapping Screw 10-32 x 3/8 Phil. Pan Hd., Type TT	1
17	00-916327-00002	Filter - Powerline	1
18	NS-013-01	Nut 1/4-20 Hex	2
19	WS-003-43	Washer	7
20	NS-038-04	Lock Nut 1/4-20	3
21	00-875883-00003	Control Panel Assy. (460 V.) (Incls. Items 1 thru 16)	1
22	00-916730-00001	Harness - Main Control	1

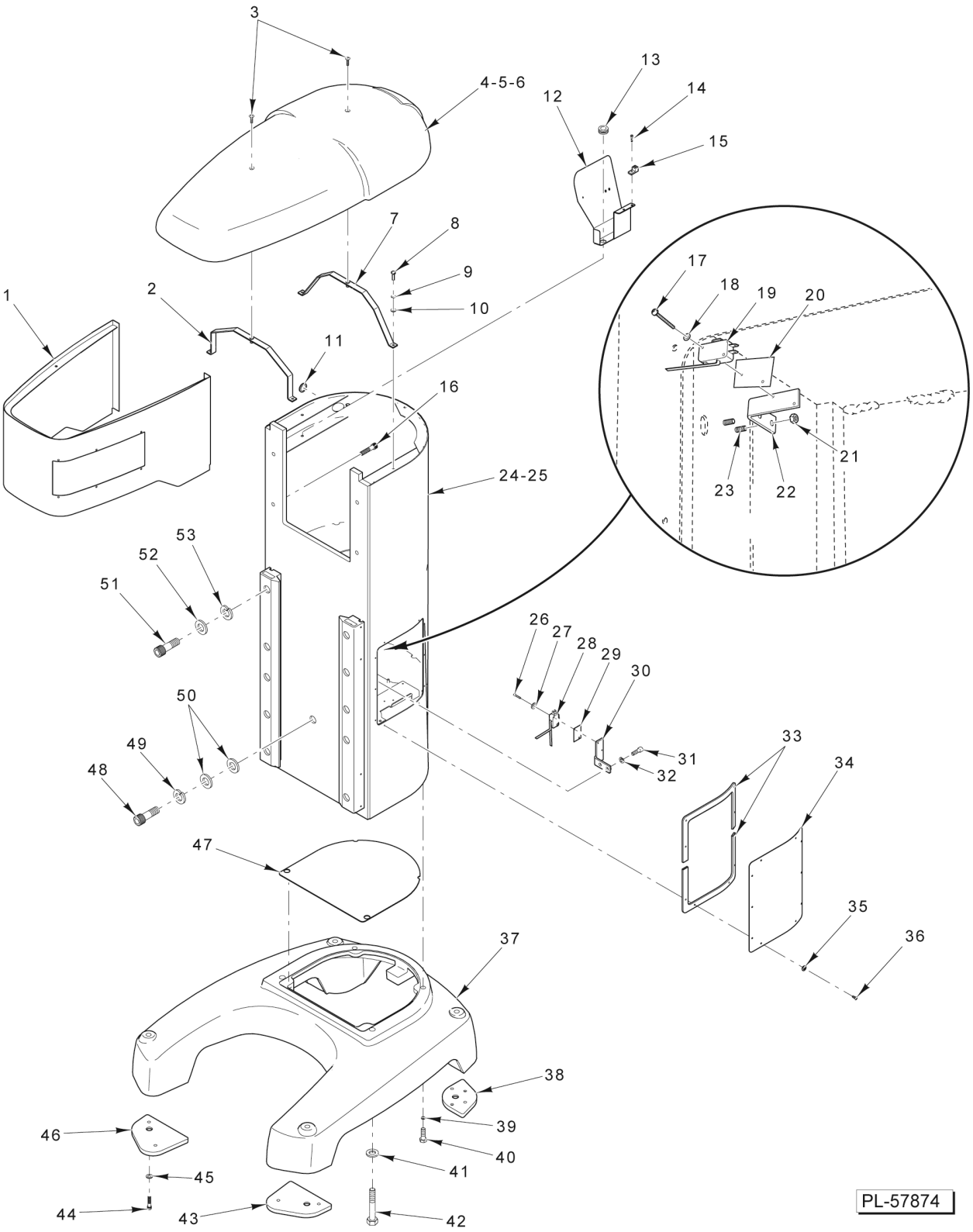

BASE AND PEDESTAL

BASE AND PEDESTAL

ILLUS. PL-57874	PART NO.	NAME OF PART	AMT.
1	00-875860	Wrapper Assy. - Transmission	1
2	00-874569	Strap Assy. - Top Cover	1
3	SC-120-29	Mach. Screw 1/4-20 x 1 Phil. Oval Hd	2
4	00-875786	Top - Cover	1
5	00-874512-00001	Seal - Top Cover (Rear)	1
6	00-874512-00002	Seal - Top Cover	1
7	00-874571	Strap Assy. - Top Cover	1
8	SC-036-06	Cap Screw 1/4-20 x 1 Hex Hd	4
9	WL-003-38	Lockwasher 1/4 Helical	4
10	WS-003-43	Washer	4
11	FE-026-44	Relief - Electrical Strain	1
12	00-916173	Shield - Wire	1
13	FE-021-13	Grommet	1
14	SD-029-02	Self-Tapping Screw 10-24 x 1/2 Slotted Pan Hd., Type F	2
15	00-118544-00001	Lug - Ground	1
16	SC-120-38	Cap Screw 5/16-18 x 1 Hex Hd	4
17	SC-060-40	Mach. Screw 4-40 x 5/8 Slotted Rd. Hd	2
18	WL-003-03	Lockwasher #4 Helical	2
19	00-087711-00248	Switch - Bowl Height	1
20	00-873376	Insulator	1
21	NS-009-30	Nut 10-32 Hex	2
22	00-874578	Bracket - Bowl Height Switch	1
23	00-113631-00040	Stud - Self-Clinching	2
24	00-916056-00002	Pedestal (ML-134319, ML-134326, ML-134356, & ML-134357)	1
25	00-916051-00002	Pedestal (ML-134320, ML-134330, ML-134335, & ML-134336)	1
26	SC-060-40	Mach. Screw 4-40 x 5/8 Slotted Rd. Hd	2
27	WL-003-03	Lockwasher #4 Helical	2
28	00-087711-00248	Switch - Bowl Height	1
29	00-873376	Insulator	1
30	00-873371	Bracket - Down Limit Switch	1
31	SC-089-02	Cap Screw 1/4-20 x 3/4 Hex Socket Hd	2
32	WL-003-38	Lockwasher 1/4 Helical	2
33	00-875815	Seal - Side Panel	2
34	00-874386-00001	Cover - Side	1
35	WS-023-22	Washer (SST)	8
36	SD-009-41	Self-Tapping Screw 8-32 x 3/8 Phil. Pan Hd., Type F (SST)	8
37	00-873960-003-2	Base	1
38	00-874149	Pad - Foot (Rear)	2
39	WL-004-11	Lockwasher 1/2 Helical	2
40	SC-037-01	Cap Screw 1/2-13 x 1-1/2 Hex Hd	2
41	WL-004-19	Lockwasher 5/8 Helical	2
42	SC-037-36	Cap Screw 5/8-11 x 3 1/2 Hex Hd	2
43	00-874150	Pad - Foot (Left)	1
44	SC-110-03	Cap Screw 3/8-16 x 3/4 Hex Socket Hd	8
45	WS-005-49	Washer	8
46	00-874153	Pad - Foot (Right)	1
47	00-874327	Plate - Pedestal Bottom	1
48	SC-110-55	Cap Screw 1/2-20 x 1-1/4 Socket Hex Hd	1
49	WL-004-11	Lockwasher 1/2 Helical	1
50	WS-008-04	Washer	2
51	SC-040-69	Cap Screw 1/2-20 x 2 Hex Socket Hd	10
52	WL-004-11	Lockwasher 1/2 Helical	10
53	WS-008-04	Washer	10

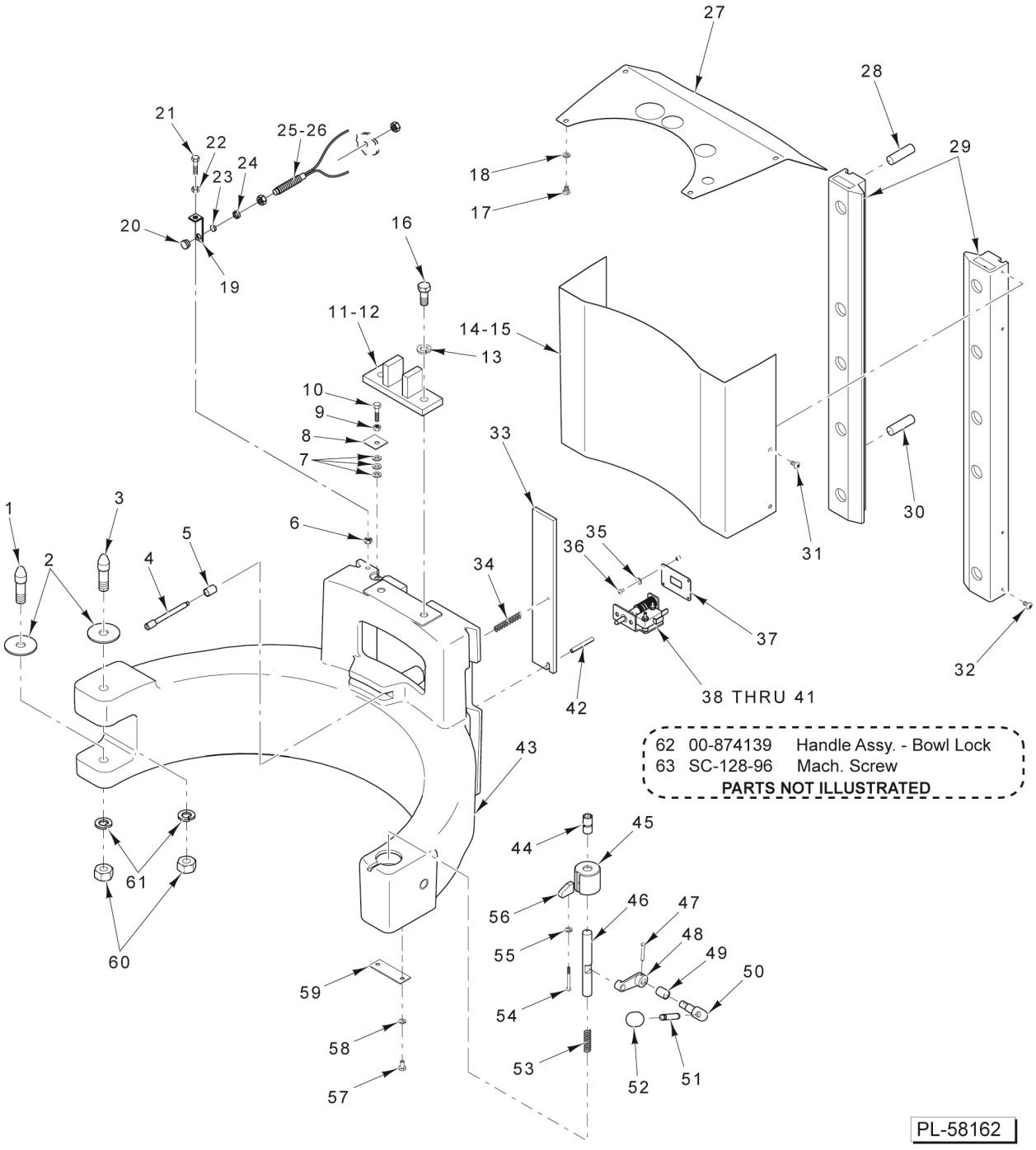

BOWL SUPPORT

BOWL SUPPORT

ILLUS. PL-58162	PART NO.	NAME OF PART	AMT.
1	00-916021	Pin - Bowl	1
2	00-916022	Bushing - Bowl Support	2
3	00-916351	Pin - Upper Bowl	1
4	00-874387	Pin - Limit	1
5	00-874492	Bushing - Bowl-In	1
6	NS-013-14	Nut 5/16-18 Hex	1
7	WS-006-36	Washer	3
8	00-916359	Plate - Stop Bowl Travel	1
9	NS-013-14	Nut 5/16-18 Hex	1
10	SC-041-13	Cap Screw 5/16-18 x 1 Hex Hd. (SST)	1
11	00-873352-00002	Actuator - Bracket (ML-134320, ML-134330, ML-134335, & ML-134336)	1
12	00-873352-00003	Actuator - Bracket (ML-134319, ML-134326, ML-134356, & ML-134357)	1
13	WL-004-11	Lockwasher 1/2 Helical	2
14	00-916087	Apron - Back (ML-134319, ML-134326, ML-134356, & ML-134357)	1
15	00-916088	Apron - Back (ML-134320, ML-134330, ML-134335, & ML-134336)	1
16	SC-062-88	Cap Screw 1/2-13 x 1-1/4 Hex Hd	2
17	SC-041-86	Cap Screw 1/4-20 x 3/8 Hex Hd. (SST)	4
18	WL-006-17	Lockwasher 1/4 Helical (SST)	4
19	00-916079	Bracket - Magnet	1
20	00-874886	Holder - Lower Magnet	1
21	SC-087-23	Cap Screw 5/16-18 x 1/2 Hex Socket Hd	1
22	WL-003-44	Lockwasher 5/16 Helical	1
23	00-874875	Magnet - Disc	1
24	00-874887	Holder - Upper Magnet	1
25	00-874929-00002	Switch - Reed-Fused Assy	1
26	00-874959-00001	Tube - Reed Switch (Short)	1
27	00-874597	Apron - Top	1
28	00-011800-00143	Pin - Dowel 1/2 x 1-3/4 SAE	2
29	00-479598	Slideway	2
30	00-011800-00143	Pin - Dowel 1/2 x 1-3/4 SAE	2
31	SC-128-95	Mach. Screw 10-24 x 1/4 Phil. Rd. Hd	4
32	SC-128-12	Mach. Screw 10-24 x 1/4 Phil. Pan Hd. (SST)	4
33	00-874566-00002	Plate - Bowl In Switch	1
34	00-873377	Spring - Bowl Pin	1
35	WL-003-12	Lockwasher #8 Helical	2
36	SC-018-33	Mach. Screw 8-32 x 5/16 Phil. Pan Hd	2
37	00-874479	Plate - Bowl In Switch	1
38	00-874893	Retainer (ML-134319 & ML-134326)	1
39	00-874893-00002	Retainer (ML-134335, ML-134336, ML-134356, & ML-134357)	1
40	00-874903-00002	Switch Assy (ML-134319, ML-134326, ML-134356, & ML-134357)	1
41	00-916391	Switch Assy. (ML-134320, ML-134330, ML-134335, & ML-134336)	1
42	RP-004-28	Pin - Roll 0.250	1
43	00-873337	Yoke - Bowl	1
44	00-874390	Bushing - Bowl Lock	1
45	00-874376	Button - Bowl Rest	1
46	00-874391	Pin - Bowl	1
47	00-874388	Detent - Clevis Pin	1
48	00-874218	Clevis - Bowl Lock	1
49	00-874138	Bushing - Bowl Pin Cam	1
50	00-874220	Handle - Bowl Pin	1
51	00-874197	Shaft - Bowl Pin Handle	1
52	00-875356	Handle - Lift Lever	1
53	00-874198	Spring - Bowl Pin	1
54	SC-092-27	Cap Screw 8-32 x 1-3/4 Hex Socket Hd	1
55	WL-003-12	Lockwasher #8 Helical	1

BOWL SUPPORT

ILLUS. PL-58162	PART NO.	NAME OF PART	AMT.
56	00-874380	Ramp - Wear	1
57	SC-036-14	Cap Screw 1/4-20 x 1/2 Hex Hd	2
58	WL-003-38	Lockwasher 1/4 Helical	2
59	00-874199	Strap - Spring Retaining	1
60	NS-013-40	Nut 5/8-11 Hex	2
61	WL-004-18	Lockwasher 5/8 Light	2
62	00-874139	Handle Assy. - Bowl Lock (Incls. Items 50, 51, & 52)	1
63	SC-128-96	Mach. Screw 8-32 x 3/8 Phil. Truss Hd. (SST) (ML-134335 & ML-134336)	4

NOTES

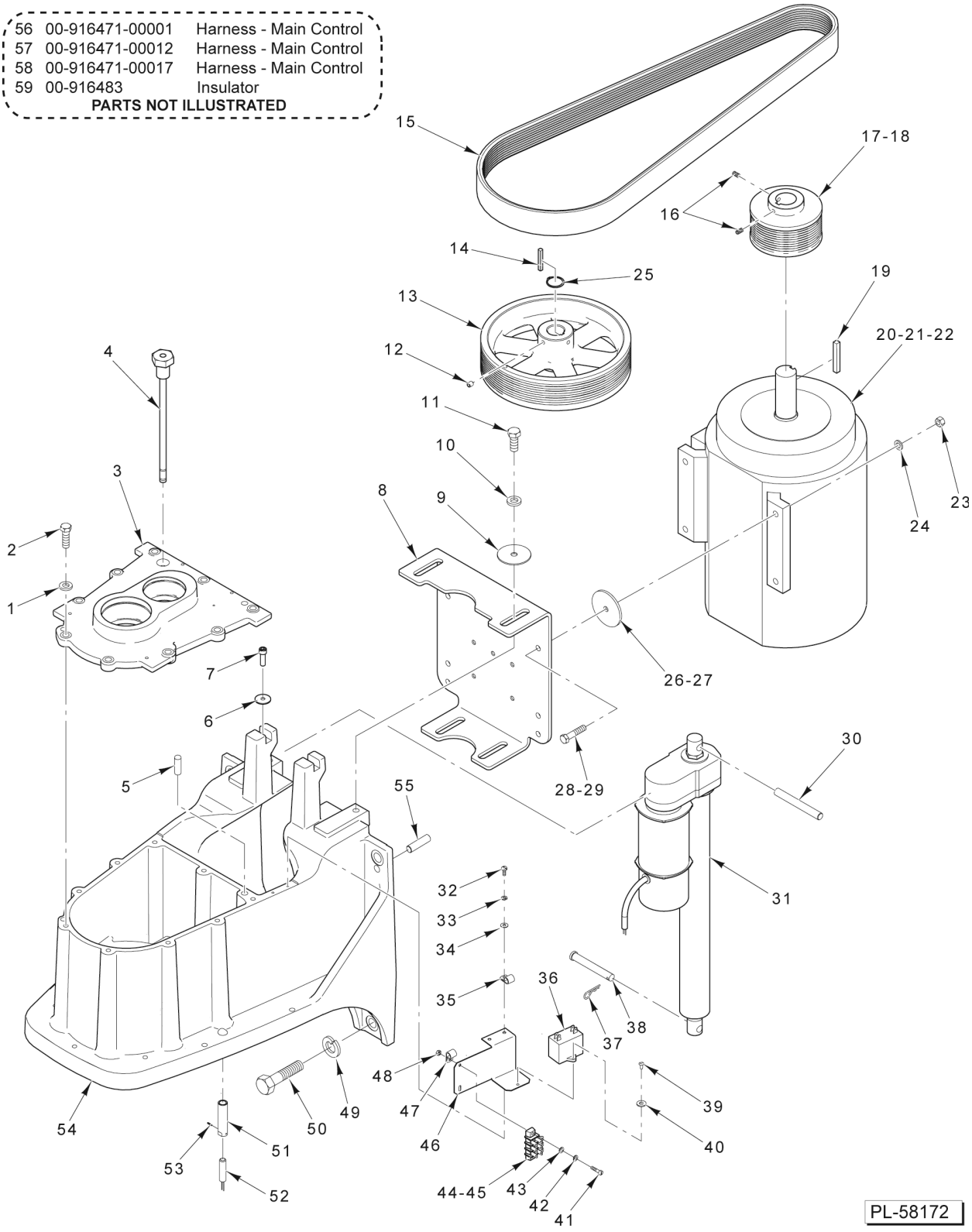

TRANSMISSION CASE AND MOTOR

TRANSMISSION CASE AND MOTOR

ILLUS. PL-58172	PART NO.	NAME OF PART	AMT.
1	WL-019-09	Lockwasher 3/8 Helical	9
2	SC-118-09	Cap Screw 3/8-16 x 1-1/4 Hex Hd	9
3	00-874653	Cover - Transmission	1
4	00-916182	Dipstick - Weldment	1
5	00-557555	NLA - Obsolete--Dowel	2
6	00-916352	Washer - Flat	2
7	SC-040-15	Cap Screw 5/16-18 x 1-1/4 Hex Socket Hd	2
8	00-874441-00002	Plate - Motor Mounting	1
9	WS-008-40	Washer	4
10	WL-019-11	Lockwasher 1/2 Helical	4
11	SC-062-88	Cap Screw 1/2-13 x 1-1/4 Hex Hd	4
12	SC-075-15	Set Screw 5/16-18 x 3/8 Hex Hdls., Cup Pt	1
13	00-916003	Sheave - Driven (10L)	1
14	00-875419-00069	Key - Chamfered	1
15	00-874493	Belt	1
16	SC-075-15	Set Screw 5/16-18 x 3/8 Hex Hdls., Cup Pt	2
17	00-875805	Sheave - Drive (ML-134320, ML-134330, ML-134335, & ML-134336)	1
18	00-875939	Sheave - Motor (ML-134319, ML-134326, ML-134356, & ML-134357)	1
19	00-875419-00079	Key 5/16 x 5/16 x 1-1/2	1
20	00-875993-00002	Motor Assy. (5 Hp.) (ML-134300, ML-134334, & ML-134337) (5 Hp., 200 - 400 V.) (ML-134320, ML-134330, ML-134335, & ML-134336)	1
*21	00-875995-00002	Motor Assy. (3 Hp.) (ML-134306 & ML-134322) (3 Hp., 200 - 400 V.) (ML-134319, ML-134326, ML-134356, & ML-134357)	1
22	00-875994-00005	Motor Assy. (5 Hp., 400 V.) (5 Hp., 400 V.) (ML-134335 & ML-134336)	1
23	NS-013-22	Nut 3/8-16 Hex	4
24	WL-004-06	Lockwasher 3/8 Helical	4
25	RR-007-02	Retaining Ring	1
26	00-875940	NLA - Obsolete--Spacer (ML-134319, ML-134326, ML-134356, & ML-134357)	4
27	00-873363	NLA - Obsolete--Spacer (ML-134320, ML-134330, ML-134335, & ML-134336)	4
28	SC-118-08	Cap Screw 3/8-16 x 1-3/4 Hex Hd. (ML-134319, ML-134326, ML-134356, & ML-134357)	4
29	SC-124-91	Cap Screw 3/8-16 x 2-1/2 Hex Hd. (ML-134320, ML-134330, ML-134335, & ML-134336)	4
30	00-874315	Pin - Actuator (Upper)	1
31	00-916565	Actuator Assy	1
32	SC-018-20	Mach. Screw 10-24 x 1/2 Slotted Pan Hd	2
33	WL-003-22	Lockwasher #10 Light	2
34	WS-002-51	Washer	2
35	00-078752-00012	Clamp (3/8 In.)	1
36	00-110979-00100	Capacitor	1
37	PC 003-50	Pin - Cotter	1
38	00-874117-00002	Pin - Clevis	1
39	SD-009-41	Self-Tapping Screw 8-32 x 3/8 Phil. Pan Hd., Type F (SST)	1
40	WS-023-22	Washer (SST)	1
41	SC-009-68	Mach. Screw 8-32 x 3/4 Slotted Rd. Hd	2
42	WL-003-15	Lockwasher #8 Light	2
43	WS-023-22	Washer (SST)	2
44	00-916269	Block - Terminal	1
45	00-065890-00139	Terminal - Spade	3
46	00-916270	Mount - Capacitor	1
47	00-294677-00002	Clamp (1/2 In.)	1
48	NS-009-12	Nut 8-32 Hex	2
49	WL-004-19	Lockwasher 5/8 Helical	4
50	SC-129-34	Cap Screw 5/8-11 x 1-1/2 Hex Hd	4
51	00-874128	Extension - Bowl Guard Switch (Bowl Guard)	1
52	00-874929-00002	Switch - Reed-Fused Assy	1
53	SC-075-14	Set Screw 6-32 x 1/8 Hex Hdls., Cup Pt	1
54	00-874641	Case - Transmission	1
55	00-508208	Pin - Dowel	2

TRANSMISSION CASE AND MOTOR

ILLUS. PL-58172	PART NO.	NAME OF PART	AMT.
56	00-916471-00001	Harness - Main Control	1
57	00-916471-00012	Harness - Main Control	1
58	00-916471-00017	Harness - Wiring	1
59	00-916483	NLA - Obsolete--Insulator	1

* Prior ML's Order W/Drive COntroller 00-916184-00004

NOTES

39	00-875856	Planetary Shaft Assy.
40	00-874447	Planetary Shaft Assy

PARTS NOT ILLUSTRATED

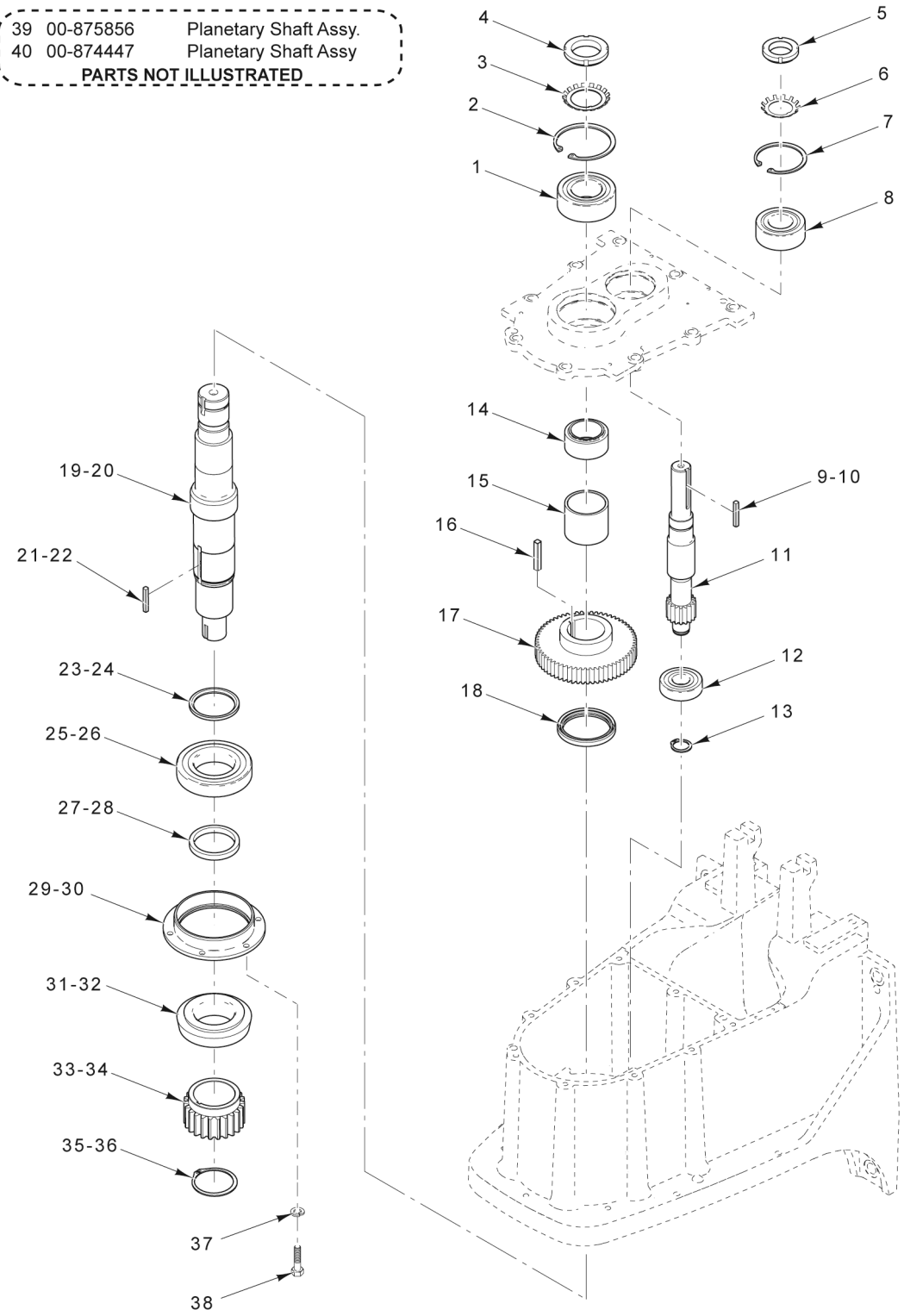

PL-58098

TRANSMISSION

TRANSMISSION

ILLUS. PL-58098	PART NO.	NAME OF PART	AMT.
1	BB-021-59	Bearing - Ball	AR
2	RR-012-21	Retaining Ring	AR
3	WL-012-10	Lockwasher	AR
4	NS-034-10	Lock Nut	AR
5	NS-034-08	Lock Nut	1
6	WL-012-08	Lockwasher	1
7	RR-004-24	Retaining Ring	1
8	BB-021-56	Bearing - Ball	1
9	00-875419-00069	Key - Chamfered (ML-134320 & ML-134330)	1
10	00-875419-00079	Key 5/16 x 5/16 x 1-1/2 Key - Chamfered (ML-134319, ML-134326, ML-134335, ML-134336, ML-134356, & ML-134357)	1
11	00-916178	Shaft - Input	1
12	BB-018-22	Bearing - Ball	1
13	RR-009-07	Retaining Ring	1
14	00-874564	Spacer - Upper (Without Att. Hub)	1
15	00-874565	Spacer - Lower (Without Att. Hub)	1
16	00-875419-00079	Key 5/16 x 5/16 x 1-1/2	1
17	00-874448	Gear	1
18	00-874454	Seal - Oil	1
19	00-875855	Shaft - Planetary (ML-134319, ML-134326, ML-134356, & ML-134357)	1
20	00-874452	Shaft - Planetary (ML-134320, ML-134330, ML-134335, & ML-134336)	1
21	00-875419-00078	Key - Chamfered (ML-134319, ML-134326, ML-134356, & ML-134357)	1
22	00-875419-00066	Key - Chamfered (ML-134320, ML-134330, ML-134335, & ML-134336)	1
23	00-064467	Spacer - Upper (Lower Planetary) (ML-134319, ML-134326, ML-134356, & ML-134357)	1
24	00-067900	Spacer - Upper (Lower Planetary) (ML-134320, ML-134330, ML-134335, & ML-134336)	1
25	BB-007-07	Ball Bearing - Sgl. Rod (ML-134319, ML-134326, ML-134356, & ML-134357)	1
26	BB-021-49	Bearing - Ball Sgl. Rod (ML-134320, ML-134330, ML-134335, & ML-134336)	1
27	00-875858	Spacer - Lower (Lower Planetary) (ML-134319, ML-134326, ML-134356, & ML-134357)	1
28	00-874567	Spacer - Lower (Lower Planetary) (ML-134320, ML-134330, ML-134335, & ML-134336)	1
29	00-875857	Carrier - Lower Bearing (ML-134319, ML-134326, ML-134356, & ML-134357)	1
30	00-874451	Carrier - Lower Bearing (ML-134320, ML-134330, ML-134335, & ML-134336)	1
31	BR-003-11	Bearing - Roller Cone (ML-134319, ML-134326, ML-134356, & ML-134357)	1
32	BR-003-29	Bearing - Roller Cone (ML-134320, ML-134330, ML-134335, & ML-134336)	1
33	00-064386	Gear - Sun (ML-134319, ML-134326, ML-134356, & ML-134357)	1
34	00-067904	Gear - Sun (ML-134320, ML-134330, ML-134335, & ML-134336)	1
35	RR-004-14	Retaining Ring (ML-134319, ML-134326, ML-134356, & ML-134357)	1
36	RR-011-96	Retaining Ring (ML-134320, ML-134330, ML-134335, & ML-134336)	1
37	WL-003-48	Lockwasher 5/16 High Collar	6
38	SC-123-75	Cap Screw 5/16-18 x 3/4 Socket Fil. Hd	6
39	00-875856	NLA - Obsolete--Planetary Shaft Assy. (ML-134319, ML-134326, ML-134356, & ML-134357) (Incls. Items 19, 21, 23, 25, 27, 29, 31, 33, & 35)	1
40	00-874447	Planetary Shaft Assy. (ML-134320, ML-134330, ML-134335, & ML-134336) (Incls. Items 20, 22, 24, 26, 28, 30, 32, 34, & 36)	1

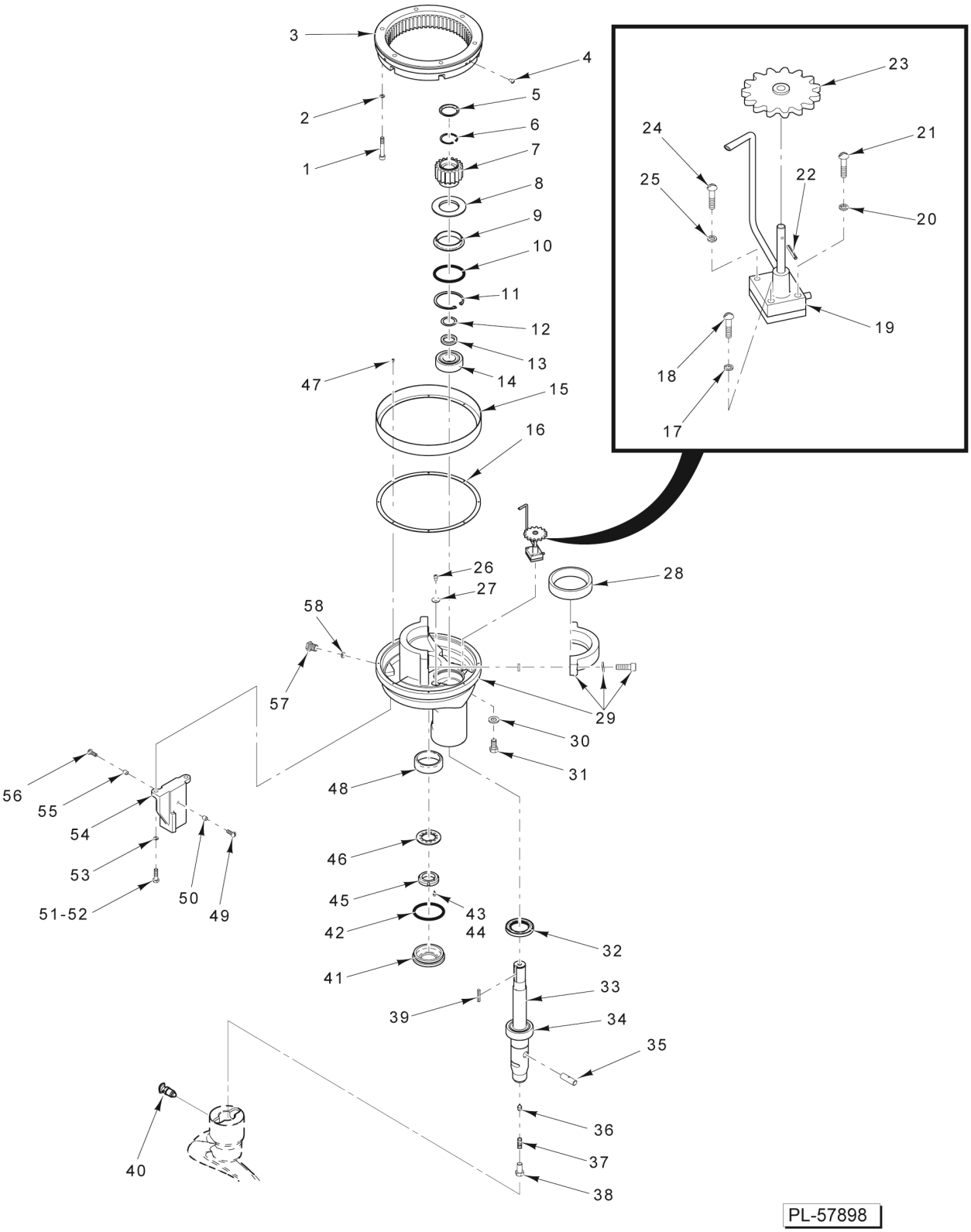

PLANETARY
(HL800 SERIES)
(ML-134319, ML-134326, ML-134356, & ML-134357)

PLANETARY
(HL800 SERIES)
(ML-134319, ML-134326, ML-134356, & ML-134357)

ILLUS. PL-57898	PART NO.	NAME OF PART	AMT.
1	SC-040-27	Cap Screw 3/8-16 x 2-1/4 Hex Socket Hd	6
2	WL-019-92	Lockwasher 3/8 Helical	6
3	00-438121	Gear - Internal (59T)	1
4	SC-021-37	Mach. Screw 1/4-20 x 3/8 Slotted Rd. Hd. (SST)	3
5	00-060071	Cap - Oil Retaining	1
6	RR-005-08	Retaining Ring	1
7	00-064732	Internal Pinion & Deflector Assy. (18T) (Incls. Item 8)	1
8	00-065372	NLA - Obsolete--Deflector - Oil	1
9	00-073011	Baffle - Planetary Oil	1
10	00-067500-00021	O-Ring	1
11	RR-004-24	Retaining Ring	1
12	00-060768	Shim - Internal Pinion	1
13	00-065408	Spacer - Agitator Shaft	1
14	BB-006-36	Ball Bearing	1
15	00-064478	Extension	1
16	00-064464	Gasket	1
17	WL-003-22	Lockwasher #10 Light	2
18	SC-009-51	Mach. Screw 10-32 x 7/8 Slotted Rd. Hd	2
19	00-290232-00001	Pump Assy. - Oil (Incls. Items 20 thru 25)	1
20	WL-003-22	Lockwasher #10 Light	1
21	SC-060-87	Mach. Screw 10-32 x 3/4 Slotted Rd. Hd. (SST)	1
22	RP-002-08	Roll Pin 5/64 Dia. x 11/16 Lg	1
23	00-064614	Gear - Drive Assy	1
24	SC-009-68	Mach. Screw 8-32 x 3/4 Slotted Rd. Hd	1
25	WL-003-15	Lockwasher #8 Light	1
26	SC-011-72	Mach. Screw 1/4-20 x 3/8 Slotted Phil. Hd	2
27	WS-003-46	Washer	2
28	BR-003-12	Bearing - Roller Cap (Incls. Items 50, 51, 52, & Bearing Cap)	1
29	00-916068	Planetary Assy	1
30	WS-021-20	Washer (Nylon)	1
31	SC-129-38	Cap Screw 7/16-20 x 1 Hex Hd. (SST)	1
32	00-916065	Seal - Oil	1
33	00-916048	Shaft - Agitator (Incls. Item 34)	1
34	BB-007-39	Ball Bearing - M.R.C. #207-SZZ	1
35	00-873953	Pin - Agitator Shaft	1
36	00-007744	Set Screw Hdls., Cone Pt	1
37	SC-047-41	Set Screw 3/8-16 x 3/8 Hex Hdls., Cup Pt	1
38	00-064723	Plug - Agitator Shaft	1
39	00-875958	Key - Chamfered	1
40	00-874145	Plunger Assy	1
41	00-437496-00002	Cap - Seal (Painted)	1
42	00-067500-00021	O-Ring	1
43	00-065277	Cap Screw Socket Hd	1
44	WL-003-15	Lockwasher #8 Helical	1
45	00-065275	Bearing - Special Lock Nut	1
46	00-064982	Washer - Tongue	1
47	SC-009-70	Mach. Screw 6-32 x 1/4 Slotted Rd. Hd	8
48	BR-002-15	Roller Bearing - Cup & Cone Assy	1
49	SC-021-54	Mach. Screw 5/16-18 x 7/8 Slotted Rd. Hd. (SST)	1
50	00-874181	Spacer - Scraper Arm	1
51	SC-041-31	Cap Screw 3/8-16 x 1-1/4 Hex Hd. (SST)	1
52	SC-041-49	Cap Screw 3/8-16 x 1 Hex Hd. (SST)	1
53	WL-006-28	Lockwasher 3/8 Helical	2
54	00-873284	Bracket - Bowl Scraper	1
55	00-874181	Spacer - Scraper Arm	1
56	SC-021-54	Mach. Screw 5/16-18 x 7/8 Slotted Rd. Hd. (SST)	1
57	00-064465-00001	Plug - Oil Fill	1
58	WS-021-20	Washer (Nylon)	1

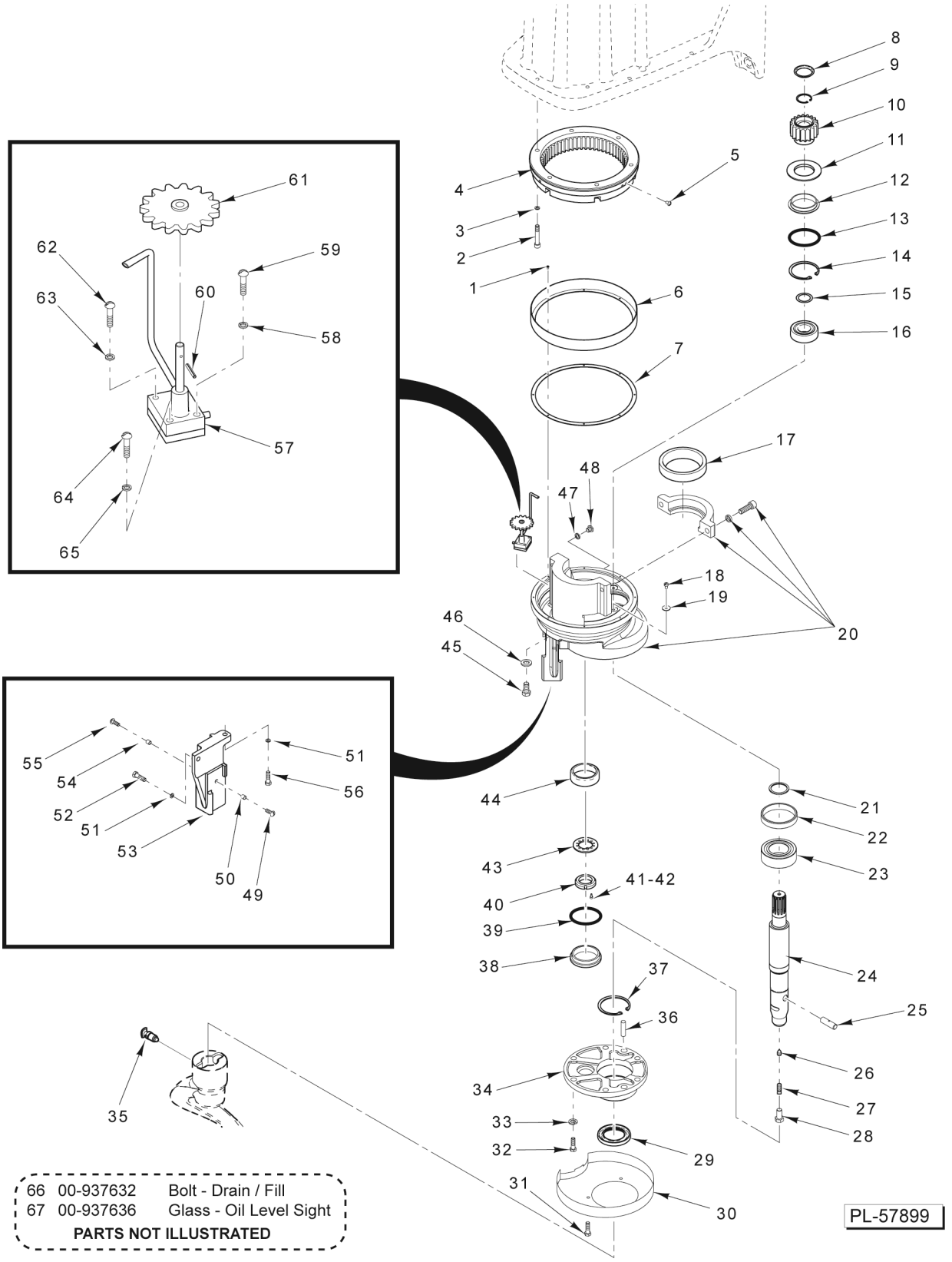

66	00-937632	Bolt - Drain / Fill
67	00-937636	Glass - Oil Level Sight

PARTS NOT ILLUSTRATED

PLANETARY
(HL1400 SERIES)
(ML-134320, ML-134330, ML-134335, & ML-134336)

PLANETARY
(HL1400 SERIES)
(ML-134320, ML-134330, ML-134335, & ML-134336)

ILLUS. PL-57899	PART NO.	NAME OF PART	AMT.
1	SC-009-70	Mach. Screw 6-32 x 1/4 Slotted Rd. Hd.	8
2	SC-040-28	Cap Screw 3/8-16 x 2-1/2 Hex Socket Hd.	6
3	WL-019-92	Lockwasher 3/8 Helical	6
4	00-438050	Gear - Internal	1
5	SC-021-37	Mach. Screw 1/4-20 x 3/8 Slotted Rd. Hd. (SST)	3
6	00-064478	Extension	1
7	00-064464	Gasket	1
8	00-060071	Cap - Oil Retaining	1
9	RR-006-08	Retaining Ring	1
10	00-067886	Pinion - Internal (18T) (Incls. Item 11)	1
11	00-065372	NLA - Obsolete--Deflector - Oil	1
12	00-073011	Baffle - Planetary Oil	1
13	00-067500-00021	O-Ring	1
14	RR-004-24	Retaining Ring	1
15	00-068277	Shim - Internal Pinion	1
16	BB-021-56	Bearing - Ball	1
17	BR-003-30	Bearing - Roller Assy	1
18	SC-011-72	Mach. Screw 1/4-20 x 3/8 Slotted Phil. Hd.	2
19	WS-003-46	Washer	2
20	00-874690-00002	Planetary Assy. (Incls. Bearing Cap) (Must Also Order Items 66 & 67)	1
21	00-067902	Spacer - Agitator Shaft	1
22	00-067903	Locator - Bearing	1
23	BB-021-55	Bearing - Ball	1
24	00-916037	Shaft - Agitator	1
25	00-873953	Pin - Agitator Shaft	1
26	00-007744	Set Screw Hdls., Cone Pt.	1
27	SC-047-41	Set Screw 3/8-16 x 3/8 Hex Hdls., Cup Pt.	1
28	00-064723	Plug - Agitator Shaft	1
29	00-068045	Seal - Planetary Oil	1
30	00-874669	Cover - Planetary	1
31	00-080531	Screw - Nylok Hex Hd.	2
32	SC-120-28	Cap Screw 1/2-13 x 2 Hex Hd.	6
33	WL-004-11	Lockwasher 1/2 Helical	6
34	00-067921-00001	Plate - Bearing	1
35	00-874145	Plunger Assy.	1
36	00-011800-00237	Dowel	2
37	RR-006-07	Retaining Ring	1
38	00-437496-00002	Cap - Seal (Painted)	1
39	00-067500-00021	O-Ring	1
40	00-065275	Bearing - Special Lock Nut	1
41	00-065277	Cap Screw Socket Hd.	1
42	WL-003-15	Lockwasher #8 Light	1
43	00-064982	Washer - Tongue	1
44	BR-002-15	Roller Bearing - Cup & Cone Assy.	1
45	SC-129-38	Cap Screw 7/16-20 x 1 Hex Hd. (SST)	1
46	WS-021-20	Washer (Nylon)	1
47	WS-021-20	Washer (Nylon)	1
48	00-064465-00001	Plug - Oil Fill	1
49	SC-021-54	Mach. Screw 5/16-18 x 7/8 Slotted Rd. Hd. (SST)	1
50	00-874181	Spacer - Scraper Arm	1
51	WL-006-28	Lockwasher 3/8 Helical	2
52	SC-041-49	Cap Screw 3/8-16 x 1 Hex Hd. (SST)	1
53	00-874649-00002	Bracket - Bowl Scraper	1
54	00-874181	Spacer - Scraper Arm	1
55	SC-021-54	Mach. Screw 5/16-18 x 7/8 Slotted Rd. Hd. (SST)	1

PLANETARY
(HL1400 SERIES)
(ML-134320, ML-134330, ML-134335, & ML-134336)

ILLUS. PL-57899	PART NO.	NAME OF PART	AMT.
56	SC-041-31	Cap Screw 3/8-16 x 1-1/4 Hex Hd. (SST)	1
57	00-290232-00002	Pump Assy. - Oil (Incls. Items 58, 59, & 60)	1
58	WL-003-22	Lockwasher #10 Light	1
59	SC-060-87	Mach. Screw 10-32 x 3/4 Slotted Rd. Hd. (SST)	1
60	RP-002-08	Roll Pin 5/64 Dia. x 11/16 Lg	1
61	00-064614	Gear - Drive Assy	1
62	SC-009-68	Mach. Screw 8-32 x 3/4 Slotted Rd. Hd	1
63	WL-003-15	Lockwasher #8 Light	1
64	SC-081-17	Mach. Screw 10-32 x 1 Slotted Rd. Hd. (SST)	2
65	WL-003-22	Lockwasher #10 Light	2
66	00-937632	Bolt - Drain / Fill (Order with Item 20)	1
67	00-937636	Glass - Oil Level Sight Glass (Order with Item 20)	1

NOTES

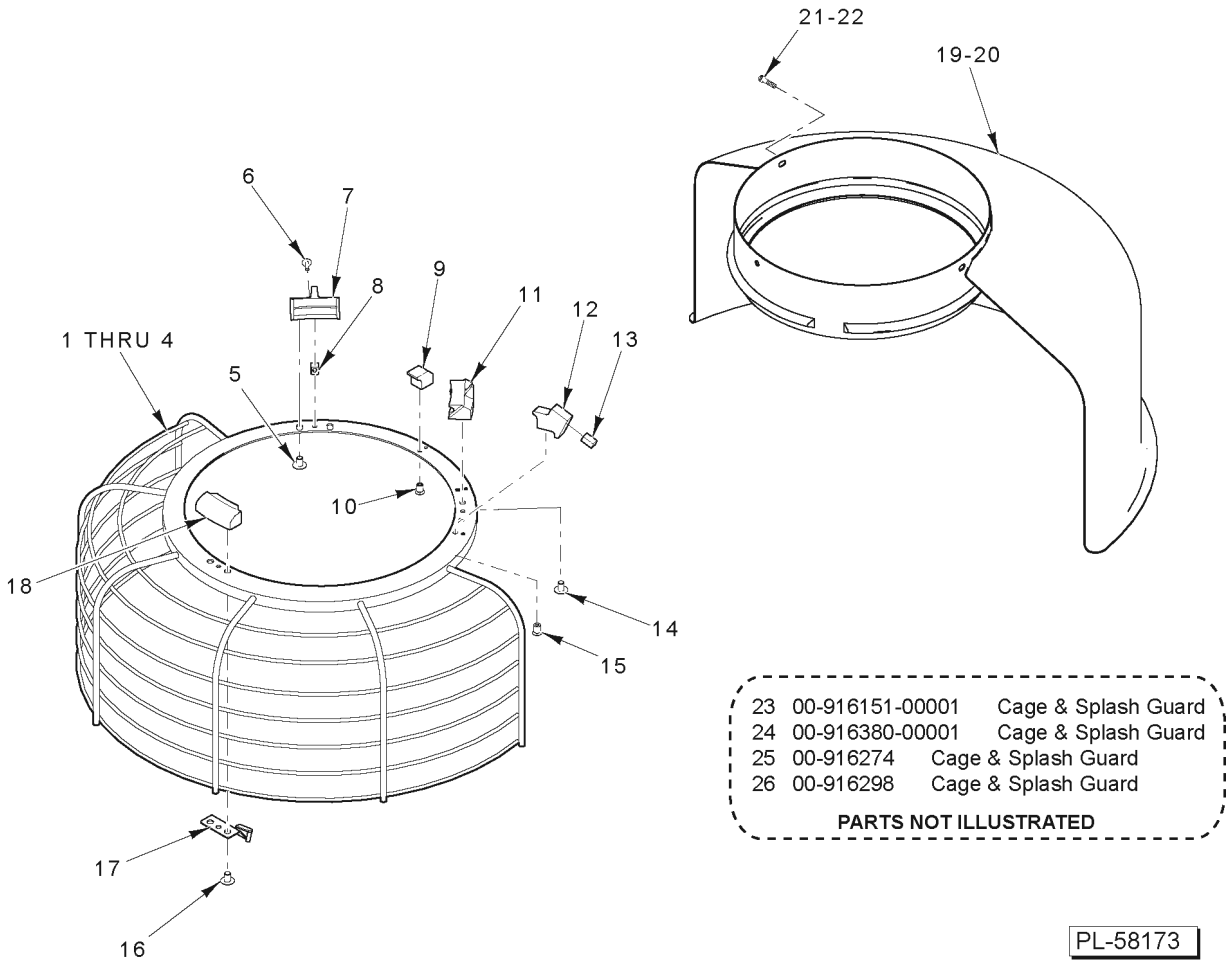

23	00-916151-00001	Cage & Splash Guard
24	00-916380-00001	Cage & Splash Guard
25	00-916274	Cage & Splash Guard
26	00-916298	Cage & Splash Guard

PARTS NOT ILLUSTRATED

BOWL GUARD

BOWL GUARD

ILLUS. PL-58173	PART NO.	NAME OF PART	AMT.
1	00-916155-00001	Wire - Cage (ML-134319 & ML-134357)	1
2	00-874953-00001	Wire - Cage (ML-134320 & ML-134335)	1
3	00-916489-00001	Wire - Cage (ML-134326 & ML-134356)	1
4	00-916300-00001	Wire - Cage (ML-134330 & ML-134336)	1
5	SC-122-45	Mach. Screw 1/4-20 x 3/8 Slotted Truss Hd	2
6	SC-123-07	Mach. Screw 8-32 x 1/2 Slotted Truss Hd	1
7	00-437433-00003	Shoe - Adjustable	1
8	00-437720	Key - Shoe	1
9	00-438055	Bumper - Cage	1
10	SC-122-44	Mach. Screw 8-32 x 3/8 Slotted Truss Hd	2
11	00-437433-00002	Shoe - Fixed	1
12	00-437442	Retainer - Magnet	1
13	00-111941	Magnet	1
14	SC-122-45	Mach. Screw 1/4-20 x 3/8 Slotted Truss Hd	2
15	SC-122-44	Mach. Screw 8-32 x 3/8 Slotted Truss Hd	2
16	SC-122-45	Mach. Screw 1/4-20 x 3/8 Slotted Truss Hd	2
17	00-875795	Stop - Cage	1
18	00-874126	Shoe - Front	1
19	00-916152	Guard - Splash & Drip (ML-134319, ML-134326, ML-134356, & ML-134357)	1
20	00-874951	Guard - Splash & Drip (ML-134320, ML-134330, ML-134335, & ML-134336)	1
21	SC-021-37	Mach. Screw 1/4-20 x 3/8 Slotted Rd. Hd. (SST) (ML-134320, ML-134330, ML-134335, & ML-134336)	3
22	SC-021-39	Mach. Screw 1/4-20 x 5/8 Slotted Rd. Hd. (SST) (ML-134319, ML-134326, ML-134356, & ML-134357)	3
23	00-916151-00001	NLA - Obsolete--Cage & Splash Guard (Incls. Items 1 & 5 thru 19) (ML-134319 & ML-134357)	1
24	00-916380-00001	Cage & Splash Guard (Incls. Items 3 & 5 thru 19) (ML-134326 & ML-134356)	1
25	00-916274	Cage & Splash Guard (Incls. Items 2, 5 thru 18, & 20) (ML-134320 & ML-134335)	1
26	00-916298	Cage & Splash Guard (Incls. Items 4 thru 18 & 20) (ML-134330 & ML-134336)	1

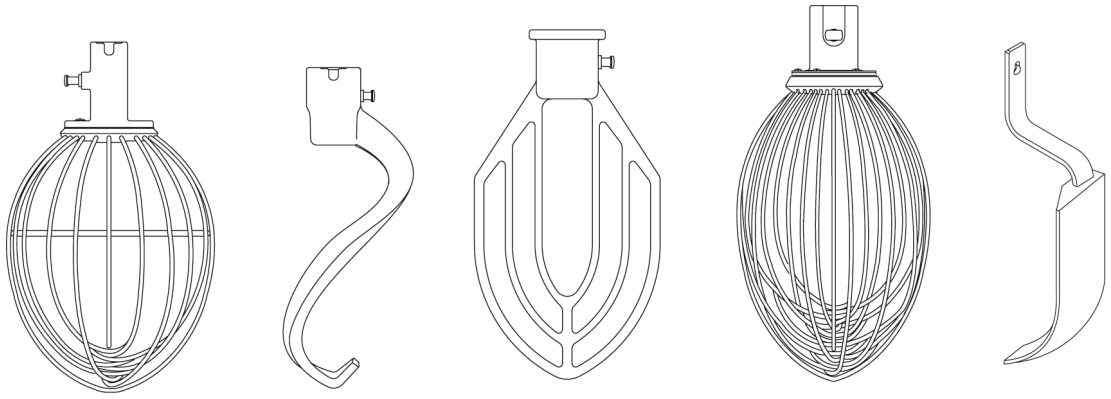

1 2 3 4 5-6

40-QUART AGITATORS

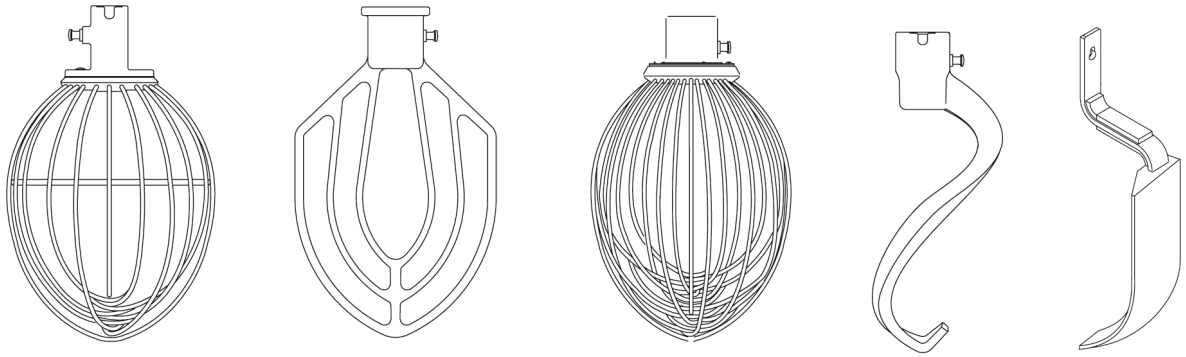

7 8 9 10 11-12

60-QUART AGITATORS

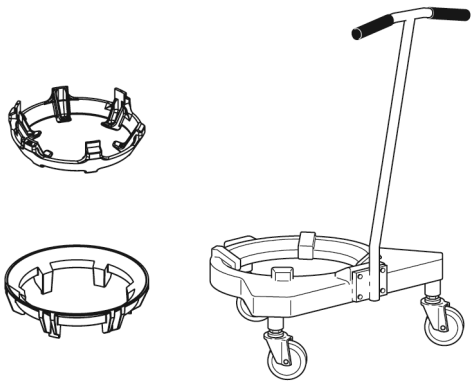

13-14 15-16-17

BOWL TRUCK

PL-57887

AGITATORS AND ACCESSORIES
(40 & 60 QUART)

AGITATORS AND ACCESSORIES
(40 & 60 QUART)

ILLUS. PL-57887	PART NO.	NAME OF PART	AMT.
1	00-916321	"I" Wire Whip (40 Quart) (Packaged)	1
2	00-916316	"ED" Dough Arm (40 Quart) (Packaged)	1
3	00-916313	"B" Flat Beater (40 Quart) (Packaged)	1
4	00-916319	"D" Wire Whip (40 Quart) (Packaged)	1
5	00-874268	Bowl Scraper (40 Quart) (Packaged) (Incls. Item 6)	1
6	00-435637-00004	Scraper - Bowl (40 Qt.)	1
7	00-916268	"I" Wire Whip (60 Quart) (Packaged)	1
8	00-916257	"B" Flat Beater (60 Quart) (Packaged)	1
9	00-916265	"D" Wire Whip (60 Quart) (Packaged)	1
10	00-916260	"ED" Dough Arm (60 Quart) (Packaged)	1
11	00-874267	Bowl Scraper (60 Quart) (Packaged) (Incls. Item 12)	1
12	00-435637-00001	Scraper - Bowl (60 Qt.)	1
13	00-916493	Bowl Truck Adapter (60-80-140 Quart) (Packaged)	1
14	00-916495	Bowl Truck Adapter (40-60 Quart) (Packaged)	1
15	00-873307	Bowl Truck (Packaged) (HL800 Series)	1
16	00-873308	Bowl Truck (Packaged) (HL1400 Series)	1
17	00-874288	Caster (4 In.)	1
18	00-438047	Chute - Ingredient (Pkg.)	1

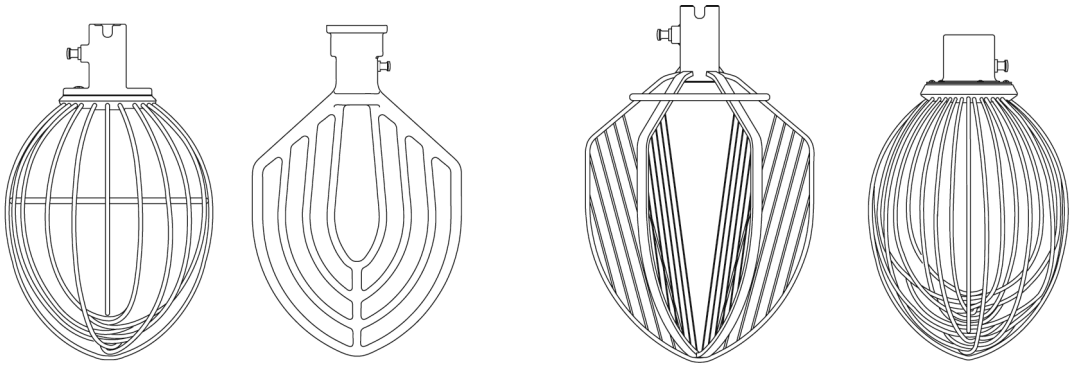

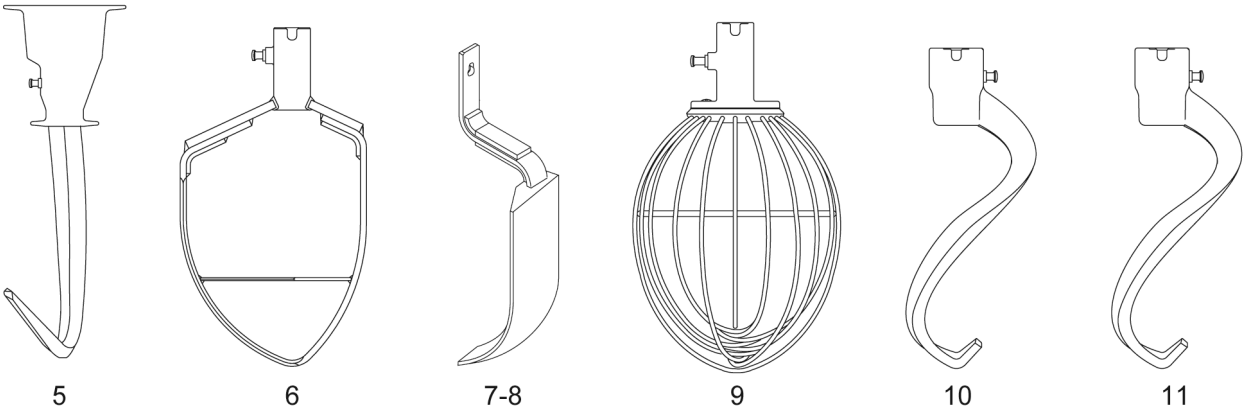

80-QUART AGITATORS

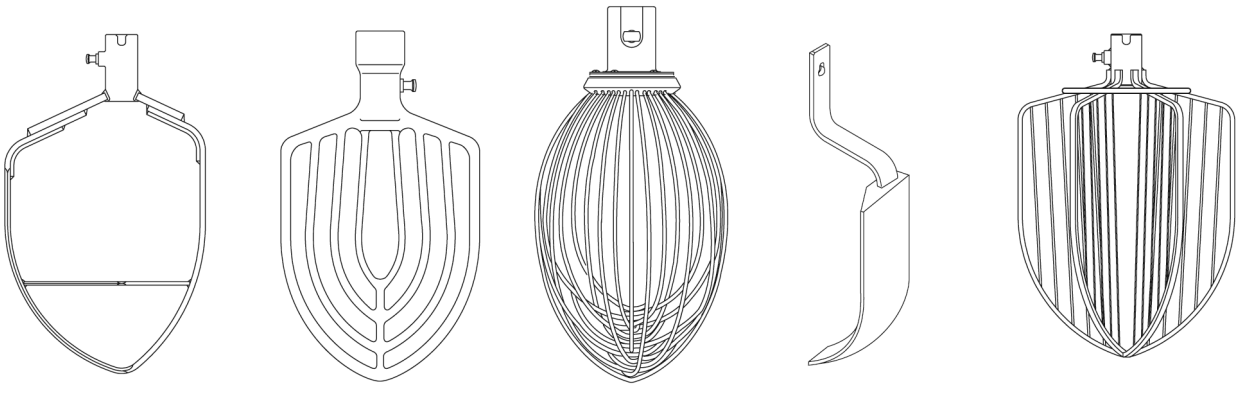

140-QUART AGITATORS

PL-57888

AGITATORS AND ACCESSORIES (80 & 140 QUART)

AGITATORS AND ACCESSORIES
(80 & 140 QUART)

ILLUS. PL-57888	PART NO.	NAME OF PART	AMT.
1	00-875931	"I" Wire Whip (80 Quart) (Packaged)	1
2	00-874654	"B" Beater (80 Quart) (Packaged)	1
3	00-875946	"C" Wire Whip (80 Quart) (Packaged)	1
4	00-875866	"D" Wire Whip (80 Quart) (Packaged)	1
5	00-874647	"ED" Dough Arm (80 Quart) (Packaged)	1
6	00-875914	Pastry Knife (80 Quart) (Packaged)	1
7	00-874700	Bowl Scraper (80 Quart) (Packaged) (Incls. Item 8)	1
8	00-435637-00002	Scraper - Bowl (80 Qt.)	1
9	00-875929	"I" Wire Whip (140 Quart) (Packaged)	1
10	00-875847	"ED" Dough Arm (140 Quart) (Packaged)	1
11	00-916316	"ED" Dough Arm (40 Quart) (Packaged)	1
12	00-875906	Pastry Knife (140 Quart) (Packaged)	1
13	00-874409	"B" Flat Beater (Alum.) (140 Quart) (Packaged)	1
14	00-875863	"D" Wire Whip (140 Quart) (Packaged)	1
15	00-874699	Bowl Scraper (140 Quart) (Packaged) (Incls. Item 16)	1
16	00-435637-00003	Scraper - Bowl (140 Quart)	1
17	00-875938	"C" Wire Whip (140 Quart) (Packaged)	1

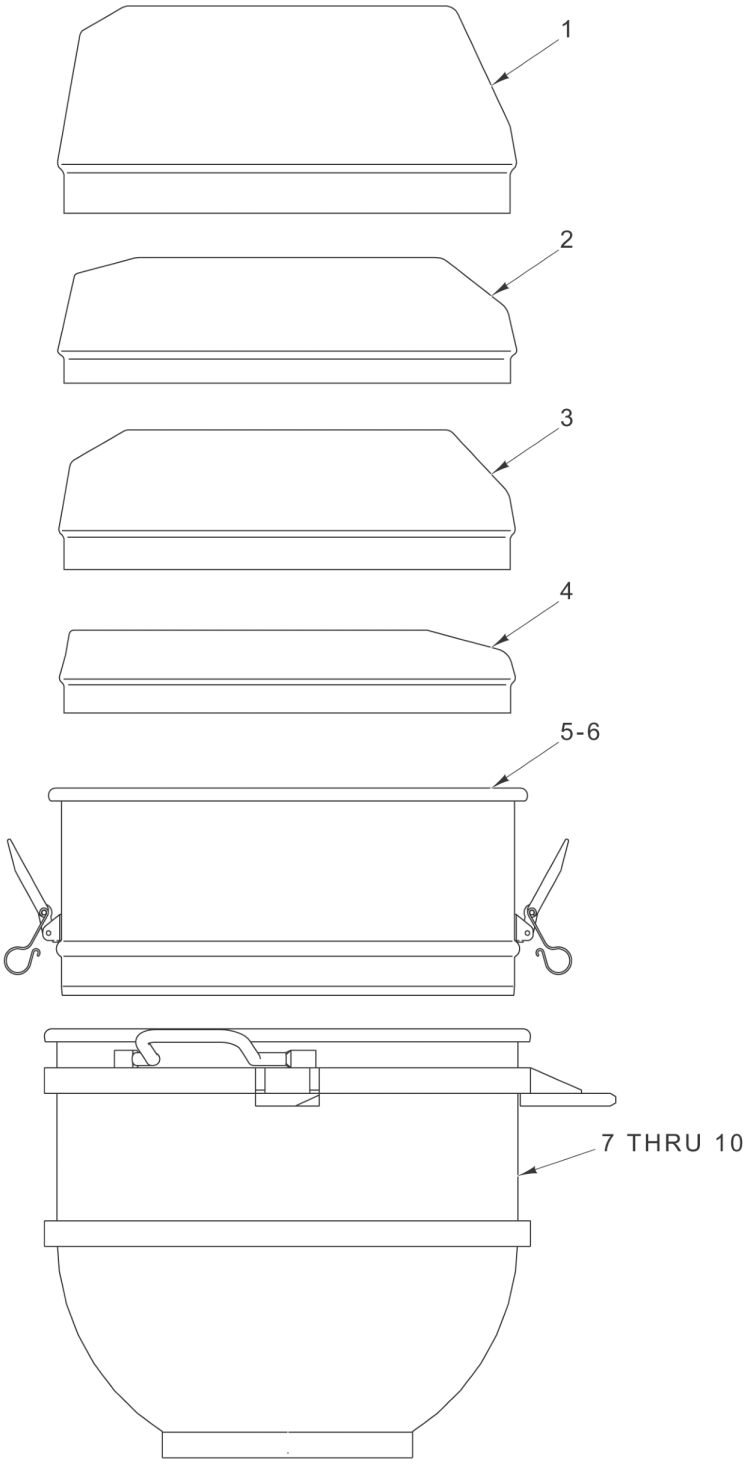

BOWL AND EXTENSIONS

BOWL AND EXTENSIONS

ILLUS. PL-57889	PART NO.	NAME OF PART	AMT.
1	00-438081	Splash Cover (40 Quart) (Packaged)	1
2	00-438082	Splash Cover (60 Quart) (Packaged)	1
3	00-438083	Splash Cover (80 Quart) (Packaged)	1
4	00-438084	Splash Cover (140 Quart) (Packaged)	1
5	00-438104-00004	Bowl Extension Assy. (60 Quart) (Packaged)	1
6	00-438104-00002	Bowl Extension Assy. (80 Quart) (Packaged)	1
7	00-916175	Bowl Assy. (40 Quart) (Packaged)	1
8	00-916174	Bowl Assy. (60 Quart) (Packaged)	1
9	00-875846	Bowl Assy. (80 Quart) (Packaged)	1
10	00-875845	Bowl Assy. (140 Quart) (SST) (Packaged)	1