# CATALOG OF REPLACEMENT PARTS




## HLX SERIES SCALE

**Scale/Printer**

**ML-29278**
**ML-29280**
**ML-29281**
**ML-29282**
**ML-29283**
**ML-29284**
**ML-29286**
**ML-29289**
**ML-29290**
**ML-29292**

**Printer**

**ML-29287**
**ML-29298**
**ML-29299**
**ML-29300**
**ML-29301**
**ML-29314**
**ML-29315**

**Hanging Scale/Printer**

**ML-29288**

**Self Service Scale/Printer**

**ML-29309**
**ML-29313**

**Scale/Printer with GCD**

**ML-29334**
**ML-29335**
**ML-29336**
**ML-29337**

**A product of HOBART 701 S. RIDGE AVENUE TROY, OHIO 45374-0001**

**FORM 43139 Rev. I (September 2016)**

 © HOBART 2016

## Table of Contents


5 CONSOLE
7 WEIGHER COMPONENTS
9 MAIN CIRCUIT COMPONENTS
11 POWER SUPPLY
13 PRINTER
15 CASSETTE (WIDE LABEL)
17 CASSETTE (NARROW LABEL)
19 PRINTER ONLY (ML-29287) (USED WITH TWO-PIECE SCALE/PRINTER)
21 SCALE UNIT (USED WITH ML-29287) (USED WITH TWO-PIECE SCALE/ PRINTER)
23 HANGING SCALE SUPPORT UNIT (ML-29288)
25 PAN AND ARM (ML-29288)
27 STATIONARY MOUNT ASSEMBLY (USED WITH HANGING SCALE)
29 MOVEABLE MOUNT ASSEMBLY (USED WITH HANGING SCALE)
31 ELEVATED DISPLAY OPTION
33 RFID OPTION
35 SELF SERVICE STAND (ML-29309)
37 GRAPHICAL CUSTOMER DISPLAY PARTS

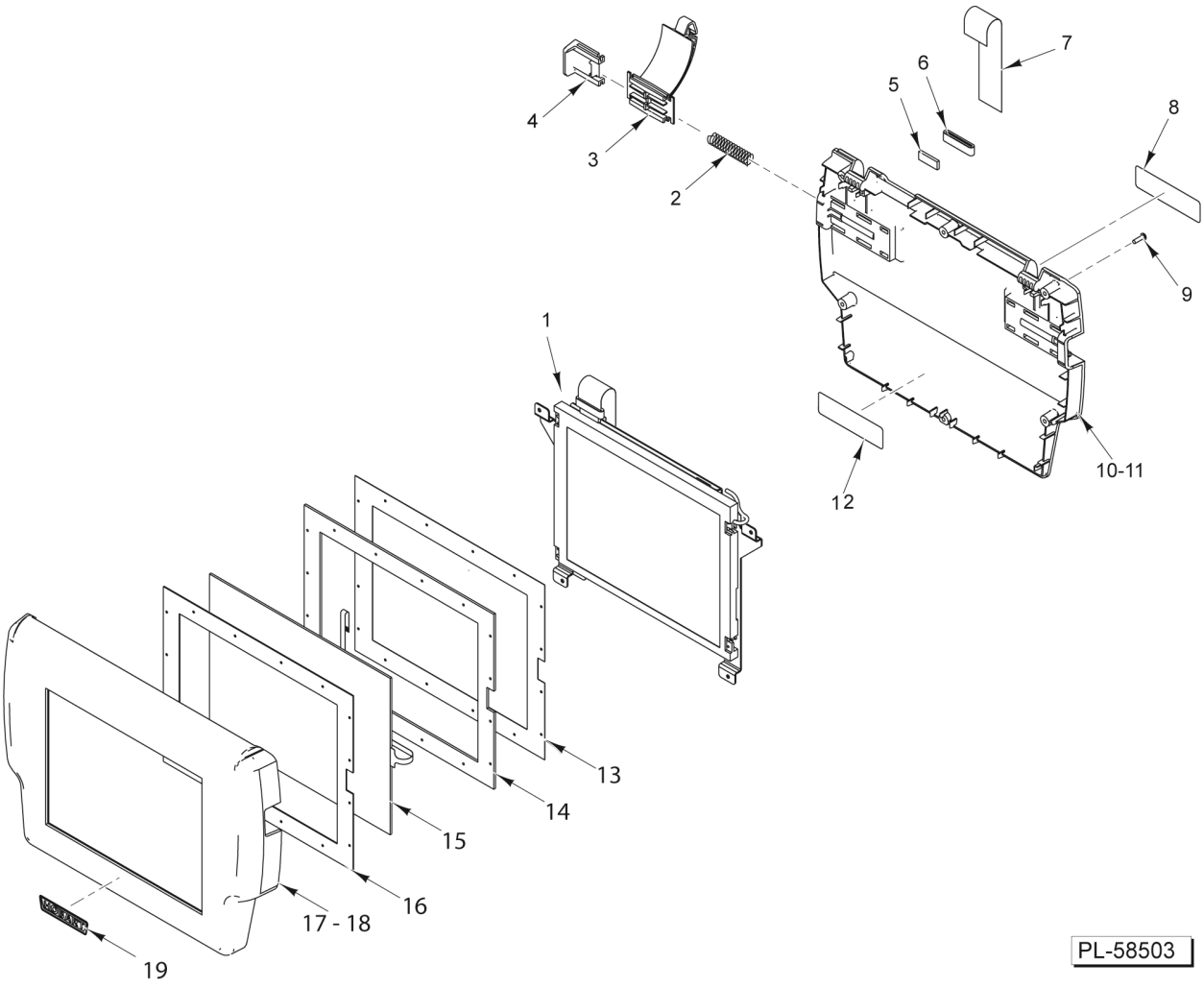


**CONSOLE**

## CONSOLE

| ILLUS. PL-58503 | PART NO. | NAME OF PART | AMT. |
|---|---|---|---|
| 1 | 00-446748 | Display Assy. (LED) Includes Mounting Bracket, Cable and Console Board | 1 |
| 2 | 00-043316 | Spring - Latch Return | 2 |
| 3 | 00-043314 | Arm - Console | 2 |
| 4 | 00-043315 | Button - Console Latch | 2 |
| 5 | 00-445076 | Tape - Foam | 1 |
| 6 | 00-445075 | Ferrite - Flat Cable | 1 |
| 7 | 00-444720 | Cable (Console to Main Board) | 1 |
| 8 | 00-443066 | Label - Notice (Mercury) | 1 |
| 9 | SD-037-72 | Self-Tapping Screw 6-19 x 1/2 Phil. Pan Hd | 6 |
| 10 | 00-443517-00002 | Housing - Rear Console (Dark Gray) | 1 |
| 11 | 00-443517-00003 | Housing - Rear Console (Black) (Units Starting With Serial Number 45-1055-510) | 1 |
| 12 | 00-443066 | Label - Notice (Mercury) | 1 |
| 13 | 00-445392 | Mask - Display Gasket | 1 |
| 14 | 00-445307 | Gasket - Display (Behind The Touchscreen, Thick Gasket) | 1 |
| 15 | 00-445363 | Touchscreen Assy. (5-Wire, 90-Deg. Turn In Cable) | 1 |
| 16 | 00-445309 | Gasket - Touchscreen (Front Of The Touchscreen, Thin Gasket) | 1 |
| 17 | 00-445423-00002 | Housing - Front Console (With Pins) (Dark Gray) | 1 |
| 18 | 00-445423-00003 | Housing - Front Console (Black) (Units Starting With Serial Number 45-1055-510) | 4 |
| 19 | 00-076971 | Plate - Logo | 4 |

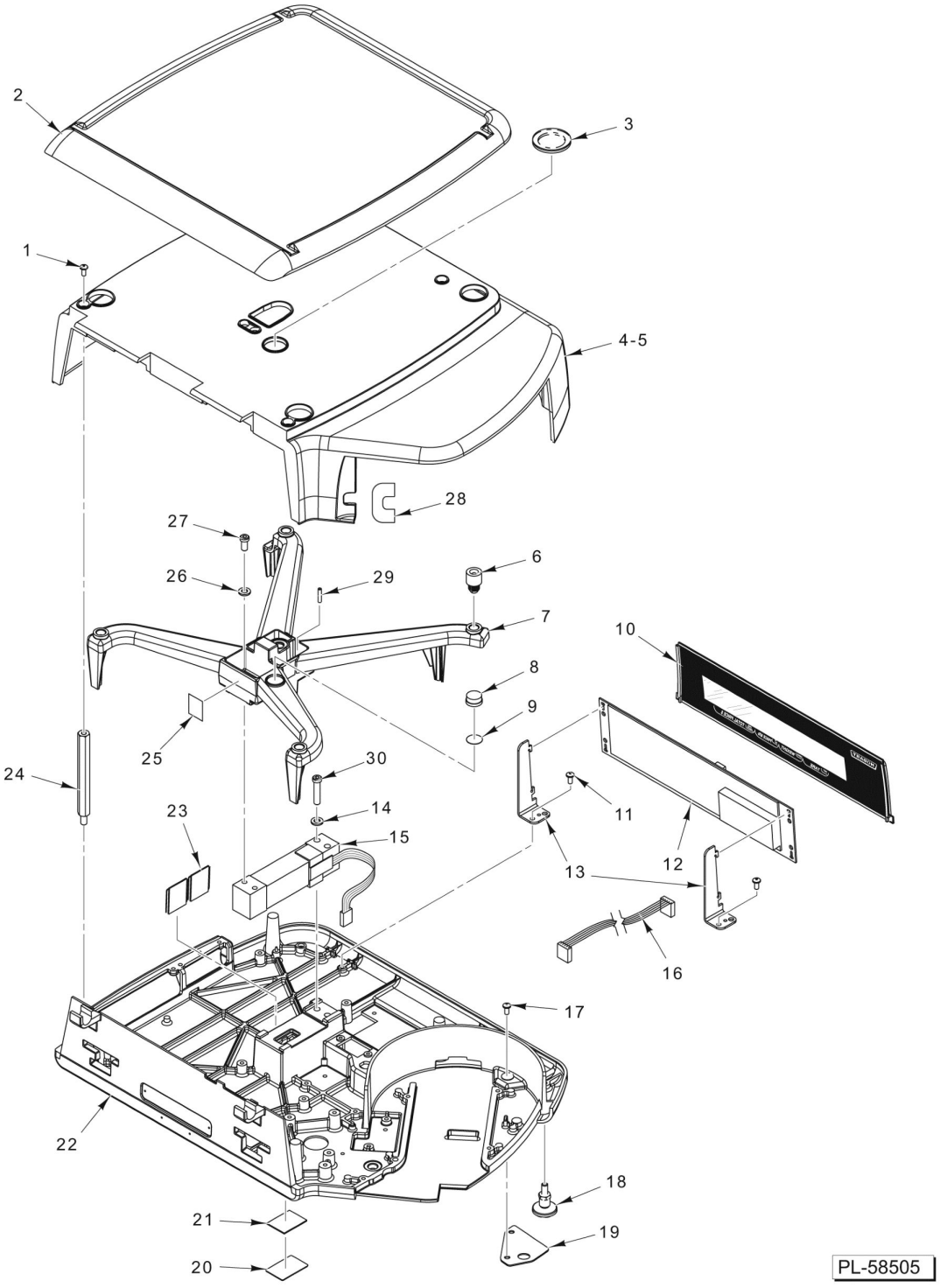


**WEIGHER COMPONENTS**

## WEIGHER COMPONENTS

| ILLUS. PL-58505 | PART NO. | NAME OF PART | AMT. |
|---|---|---|---|
| 1 | SC-129-33 | Mach. Screw 8-32 x 3/8 Phil. Pan Hd | 4 |
| 2 | 00-043304 | Platter Assy | 1 |
| 3 | 00-441243 | Cover - Level Bubble (Incls. Foam Gasket) | 1 |
| 5 | 00-443633-00003 | Housing - Main (Black) (Units Starting With Serial Number 45-1055-510) | 1 |
| 6 | 00-043319 | Mount - Platter | 5 |
| 7 | 00-043302 | Platter - Sub | 1 |
| 8 | 00-043112 | Level - Spirit | 1 |
| 9 | 00-043257 | Tape - Level | 1 |
| 10 | 00-444871 | Screen Assy. - Display (Customer) | 1 |
| 11 | SD-015-41 | Self-Tapping Screw 8-32 x 1/2 Phil. Pan Hd., Type TT | 2 |
| 12 | 00-444590-00001 | Board Assy. - VF Display | 1 |
| 13 | 00-043342 | Bracket - VFD Mounting | 2 |
| 14 | WL-008-17 | Lockwasher 1/4 Internal | 2 |
| 15 | 00-443075 | Load Cell - Multiple Range (15 kg) | 1 |
| 16 | 00-444726 | Cable Assy. (Customer Display) | 1 |
| 17 | SD-015-41 | Self-Tapping Screw 8-32 x 1/2 Phil. Pan Hd., Type TT | 2 |
| 18 | 00-443045 | Foot Assy | 4 |
| 19 | 00-043371 | Cover - Cable Hole | 1 |
| 20 | 00-043389 | Plate - Remote Weigher | 1 |
| 21 | 00-043256 | Tape | 1 |
| 22 | 00-444750-00002 | Base - Main | 1 |
| 23 | 00-443047 | Plate Assy. - SM Port | 2 |
| 24 | 00-043318 | Standoff (Housing Mount) | 4 |
| 25 | 00-445341 | Label - Battery | 1 |
| 26 | WL-008-17 | Lockwasher 1/4 Internal | 2 |
| 27 | SC-040-77 | Cap Screw 1/4-20 x 5/8 Hex Socket Hd | 2 |
| 28 | 00-043274 | Shield - Infrared | 1 |
| 29 | 00-043286 | Screw - Overload (Stop) | 2 |
| 30 | SC-120-70 | Cap Screw 1/4-20 x 1-5/8 Hex Socket Hd | 2 |

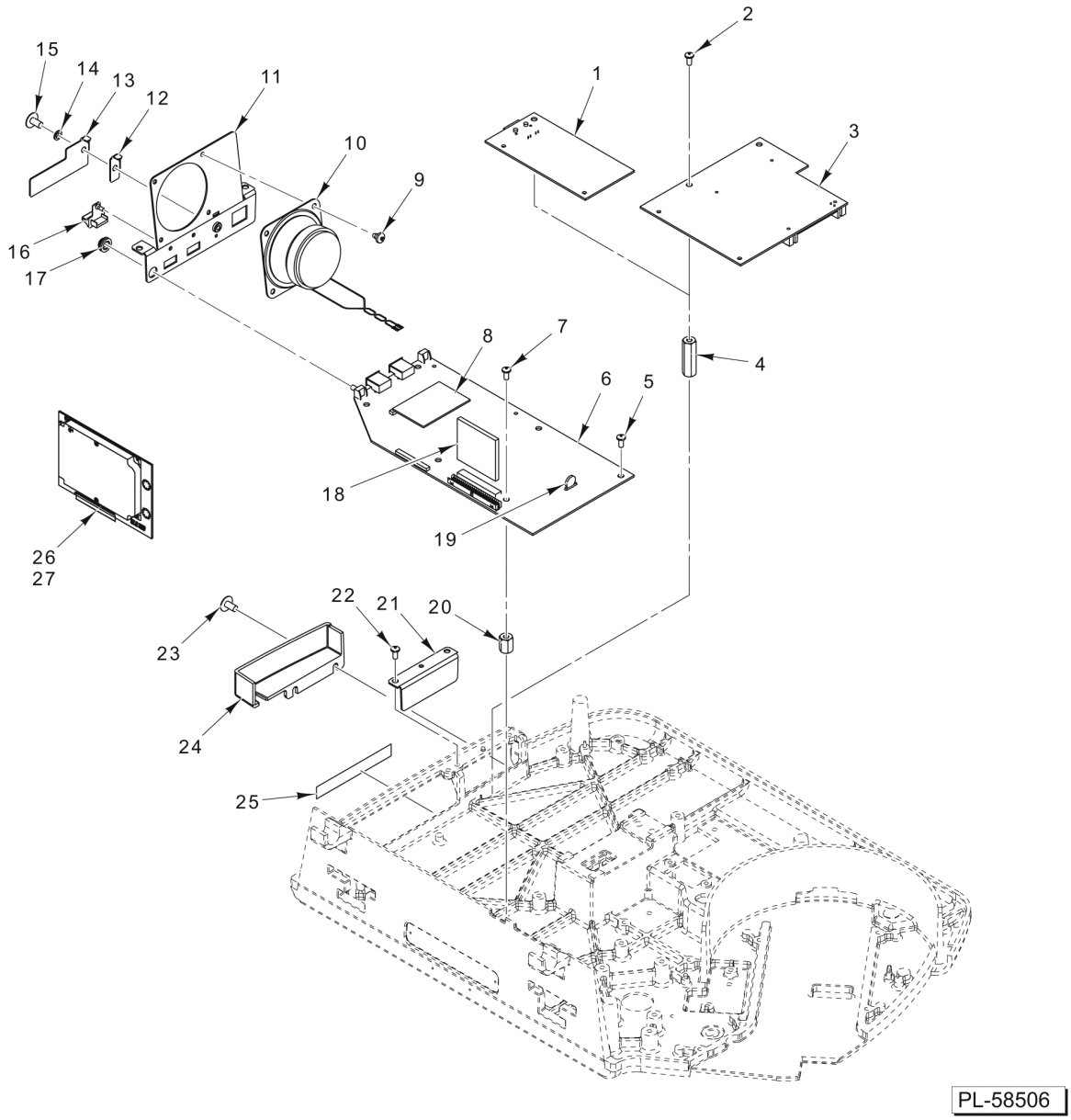


**MAIN CIRCUIT COMPONENTS**

## MAIN CIRCUIT COMPONENTS

| ILLUS. PL-58506 | PART NO. | NAME OF PART | AMT. |
|---|---|---|---|
| 1 | 00-444702 | Board Assy. - Wired Adapter | 1 |
| 2 | SC-129-33 | Mach. Screw 8-32 x 3/8 Phil. Pan Hd | 2 |
| 3 | 00-444705 | Board Assy. - Wireless Adapter | 1 |
| | 00-444562 | Card - Wireless Cisco CB21AG (WEP, WPA, & WPA2 Security) | AR |
| | 00-444560 | Card - Wireless Symbol LA4137 (Use with Adapter) (WEP & WPA Security) | AR |
| | 00-444936 | Adapter - PCMIA to CF (For 00-444560 Card - Wirless Symbol LA4137) | AR |
| | 00-441686 | Card - Cisco 352 (WEP Security Only) | AR |
| 4 | 00-444695 | Standoff - Cardbus Mounting | 2 |
| 5 | SD-015-41 | Self-Tapping Screw 8-32 x 1/2 Phil. Pan Hd., Type TT | 2 |
| 6 | 00-444635 | Board Assy. - Main | 1 |
| 7 | SC-129-33 | Mach. Screw 8-32 x 3/8 Phil. Pan Hd | 6 |
| 8 | 00-445268 | Board Assy. (512 MB DDR PC3200) | 1 |
| 9 | SD-007-38 | Self-Tapping Screw 8-18 x 1/4 Phil. Bndg. Hd., Type B | 4 |
| 10 | 00-444802 | Speaker Assy | 1 |
| 11 | 00-444690 | Bracket Assy. - Main Board | 1 |
| 12 | 00-043277 | Cover - Service Switch Access | 1 |
| 13 | 00-445061 | Plate - USB Cover | 1 |
| 14 | WL-003-12 | Lockwasher #8 Helical | 1 |
| 15 | 00-183906 | Screw (Special Fil. Hd.) | 1 |
| 16 | 00-443581 | Plug - USB Type A | 2 |
| 17 | 00-443606 | Seal - Power / Reset Button | 1 |
| 18 | 00-445964 | Drive - Compact Flash (Recovery) | 1 |
| 19 | 00-441827 | Battery - Lithium Coin (CR2032) | 1 |
| 20 | 00-444692 | Standoff - Main PCB | 4 |
| 21 | 00-043338 | Bracket - ECB Blank | 1 |
| 22 | SD-015-41 | Self-Tapping Screw 8-32 x 1/2 Phil. Pan Hd., Type TT | 2 |
| 23 | SD-015-41 | Self-Tapping Screw 8-32 x 1/2 Phil. Pan Hd., Type TT | 2 |
| 24 | 00-446799 | Cover - Antenna | 1 |
| 25 | 00-444873 | Label - Connector | 1 |
| *26 | 00-445625-00001 | Hard Drive - Recovery (Lowe's) | 1 |
| 27 | 00-447565-00002 | Recovery Compact Flash (Walmart/Samls CLub) | 1 |
| | 00-445965 | Drive - Compact Flash (Recovery) (Standard Self Serve) | 1 |
| | 00-445966 | Drive - Compact Flash (Recovery) (Extended Self Serve) | 1 |
| | 00-032998 | Kit - Security Seal (Incls. Items 12, 14, & 15) | 1 |
| | 00-444424 | Seal - Wire Roto (8 In.) (Walmart) | 1 |

* Customer Unique Recovery Hard Drive

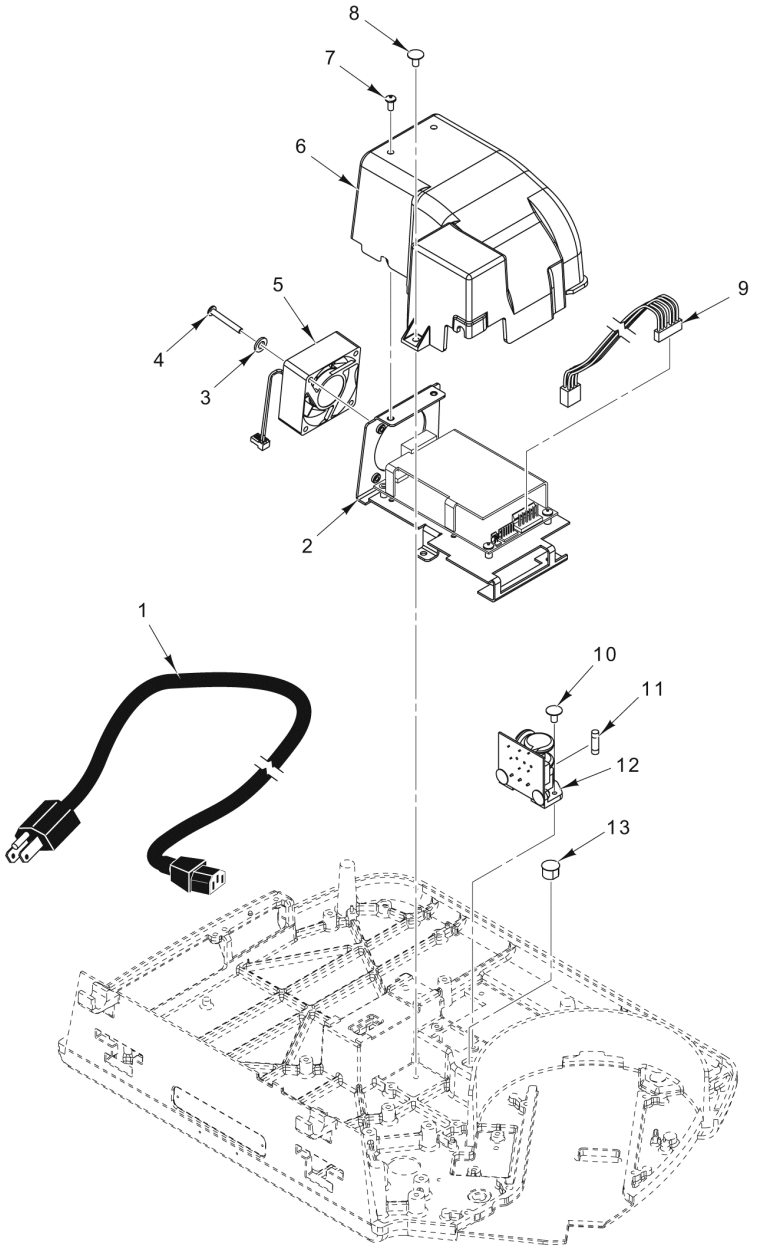


PL-58507

## POWER SUPPLY

## POWER SUPPLY

| ILLUS. PL-58507 | PART NO. | NAME OF PART | AMT. |
|---|---|---|---|
| 1 | 00-044479 | Cord - Power (120 V.) | 1 |
| 2 | 00-444870-00002 | Power Supply & Baffle Assy | 1 |
| 3 | WL-008-07 | Lockwasher 8 Internal Shakeproof | 4 |
| 4 | SC-111-94 | Mach. Screw 8-32 x 1-1/4 Phil. Pan Hd | 4 |
| 5 | 00-444906 | Fan Assy | 1 |
| 6 | 00-444799 | Shroud - Power Supply | 1 |
| 7 | SC-129-33 | Mach. Screw 8-32 x 3/8 Phil. Pan Hd | 2 |
| 8 | SD-015-41 | Self-Tapping Screw 8-32 x 1/2 Phil. Pan Hd., Type TT | 1 |
| 9 | 00-444769 | Cable Assy. - DC Power | 1 |
| 10 | SD-015-38 | Self-Tapping Screw 6-32 x 3/8 Phil. Pan Hd., Type TT | 2 |
| 11 | FE-025-32 | Fuse (250 V., 3.0 Amp.) (SLO) (Power Input Board) | 1 |
| 12 | 00-444745 | Board - Power Input (Incls. Item 11) | 1 |
| 13 | PB-005-28 | Plug - Button (1/2 In.) | 1 |

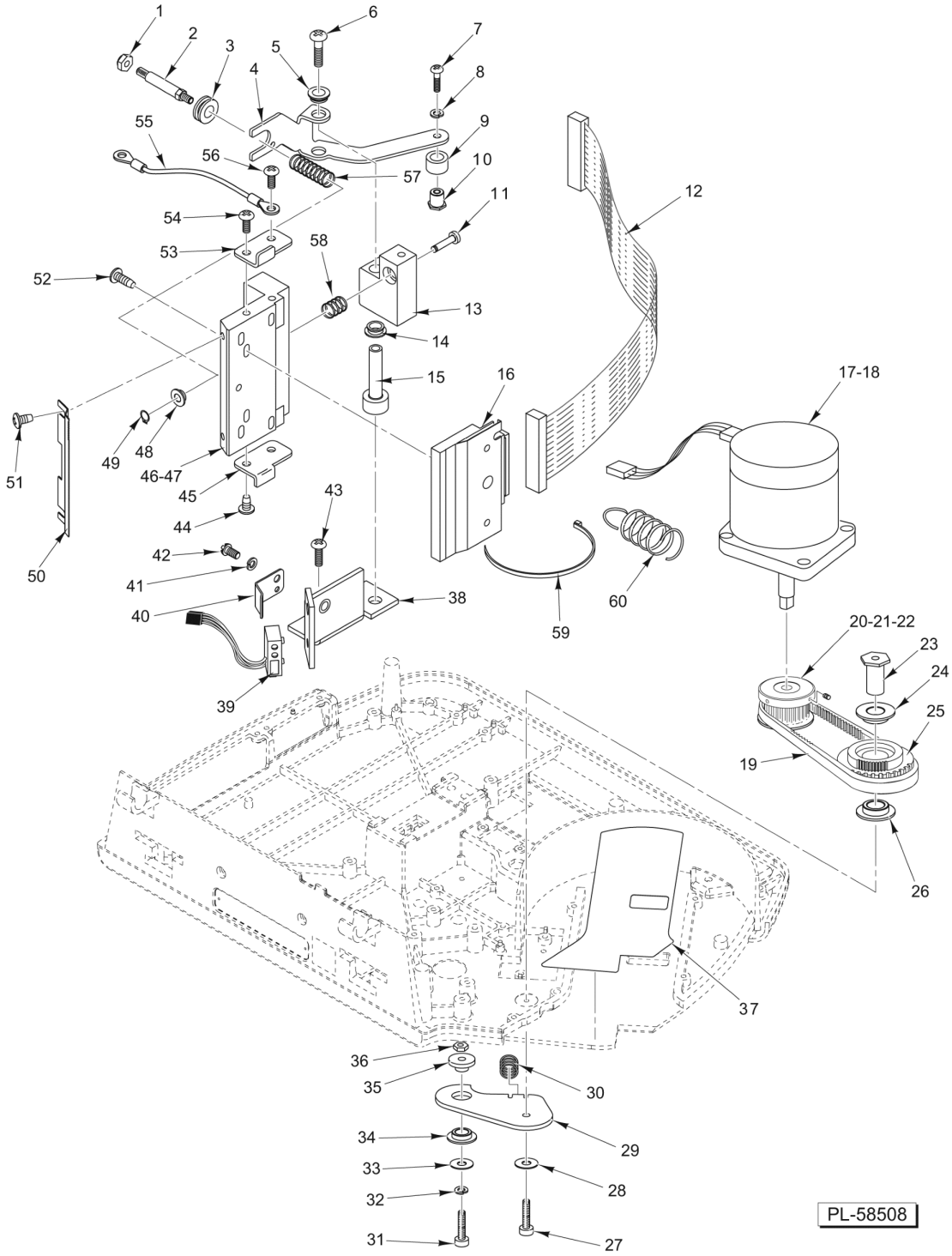
1
2
3
4
5
6
7
8
9
10
11
12
13
14
15
16
17-18
19
20-21-22
23
24
25
26
27
28
29
30
31
32
33
34
35
36
37
38
39
40
41
42
43
44
45
46-47
48
49
50
51
52
53
54
55
56
57
58
59
60
PL-58508

**PRINTER**

# PRINTER

| ILLUS. PL-58508 | PART NO. | NAME OF PART | AMT. |
|---|---|---|---|
| 1 | NS-031-49 | Stop Nut 10-32 Hex (SST) | 1 |
| 2 | 00-043267 | Stud - Adjusting | 1 |
| 3 | 00-043382 | Bushing - Stud | 1 |
| 4 | 00-043299 | Bracket - Spring Pivot | 1 |
| 5 | 00-043253 | Bushing - Nyliner | 1 |
| 6 | SD-038-05 | Self-Tapping Screw 8-32 x 1-3/4 Phil. Pan Hd., Type TT | 1 |
| 7 | SC-018-31 | Mach. Screw 8-32 x 3/8 Phil. Pan Hd | 1 |
| 8 | WL-008-07 | Lockwasher 8 Internal Shakeproof | 1 |
| 9 | 00-043385 | Roller - Pivot Arm | 1 |
| 10 | 00-043386 | Retainer - Roller | 1 |
| 11 | 00-047424 | Shaft - Printhead Pivot | 1 |
| 12 | 00-444846 | Cable - Printhead | 1 |
| 13 | 00-047423 | Pivot Block - Printhead | 1 |
| 14 | 00-043253 | Bushing - Nyliner | 1 |
| 15 | 00-047441 | Sleeve - Pivot | 1 |
| 16 | 00-442859 | Printhead - Thermal | 1 |
| 17 | 00-440142-00002 | Motor Assy. - Stepper | 1 |
| 18 | SD-015-41 | Self-Tapping Screw 8-32 x 1/2 Phil. Pan Hd., Type TT | 3 |
| 19 | 00-442823 | Belt - Timing | 1 |
| 20 | 00-442822 | Pulley - Take-Up Motor | 1 |
| 21 | SC-047-74 | Set Screw 8-32 x 1/4 Hdls. Cup Pt | 2 |
| 22 | 00-512987 | Adhesive - Loctite 222 | AR |
| 23 | 00-441758 | Shaft - Pulley & Gear | 1 |
| 24 | 00-043365 | Bushing | 1 |
| 25 | 00-043250 | Pulley & Gear Assy. (Incls. Items 24 & 26) | 1 |
| 26 | 00-043365 | Bushing | 1 |
| 27 | SC-092-36 | Cap Screw 6-32 x 1/2 Hex Socket Hd | 1 |
| 28 | WL-008-02 | Lockwasher #6 Internal Shakeproof | 1 |
| 29 | 00-447373 | Plate - Pivot | 1 |
| 30 | 00-048374 | Spring - Printhead Adjusting | 1 |
| 31 | SC-111-83 | Cap Screw 6-32 x 3/4 Hex Socket Hd | 1 |
| 32 | WL-008-02 | Lockwasher #6 Internal Shakeproof | 1 |
| 33 | WS-019-41 | Washer (SST) | 1 |
| 34 | 00-043365 | Bushing | 1 |
| 35 | 00-441760 | Bushing - Gear Adjusting | 1 |
| 36 | NS-031-03 | Stop Nut 6-32 Hex | 1 |
| 37 | 00-441701 | Label - Anti-Friction | 1 |
| 38 | 00-047442 | Bracket - Label Taken Mtg | 1 |
| 39 | 00-043610 | Sensor Assy. - Label Taken | 1 |
| 40 | 00-043394 | Bracket - Label Taken | 1 |
| 41 | WL-008-07 | Lockwasher 8 Internal Shakeproof | 1 |
| 42 | SC-018-31 | Mach. Screw 8-32 x 3/8 Phil. Pan Hd | 1 |
| 43 | SD-015-41 | Self-Tapping Screw 8-32 x 1/2 Phil. Pan Hd., Type TT | 2 |
| 44 | SD-015-37 | Self-Tapping Screw 6-32 x 1/4 Phil. Pan Hd., Type TT | 2 |
| 45 | 00-047438 | Stop - Printhead Lower | 1 |
| 46 | 00-442996 | Heat Sink and Bushing Assy. (Incls. Item 48) | 1 |
| 47 | 00-519504 | Thermo Joint Compound (2 Oz.) | AR |
| 48 | 00-043365 | Bushing | 2 |
| 49 | RR-006-22 | Retaining Ring 1/4 In. (SST) | 1 |
| 50 | 00-032887 | Tearbar | 1 |
| 51 | SD-015-37 | Self-Tapping Screw 6-32 x 1/4 Phil. Pan Hd., Type TT | 2 |
| 52 | SA-021-46 | Screw Assy. M3 x 0.5 x 12 mm Phil. Pan Hd | 2 |
| 53 | 00-047437 | Stop - Printhead Upper | 1 |
| 54 | SD-015-37 | Self-Tapping Screw 6-32 x 1/4 Phil. Pan Hd., Type TT | 1 |
| 55 | 00-049396 | Wire - Drain (Ground) | 1 |
| 56 | SD-015-37 | Self-Tapping Screw 6-32 x 1/4 Phil. Pan Hd., Type TT | 1 |
| 57 | 00-043333 | Spring - Printhead | 1 |
| 58 | 00-048374 | Spring - Printhead Adjusting | 1 |
| 59 | 00-255502 | Tie - Cable Locking | 1 |
| 60 | 00-043387 | Spring - Extension | 1 |

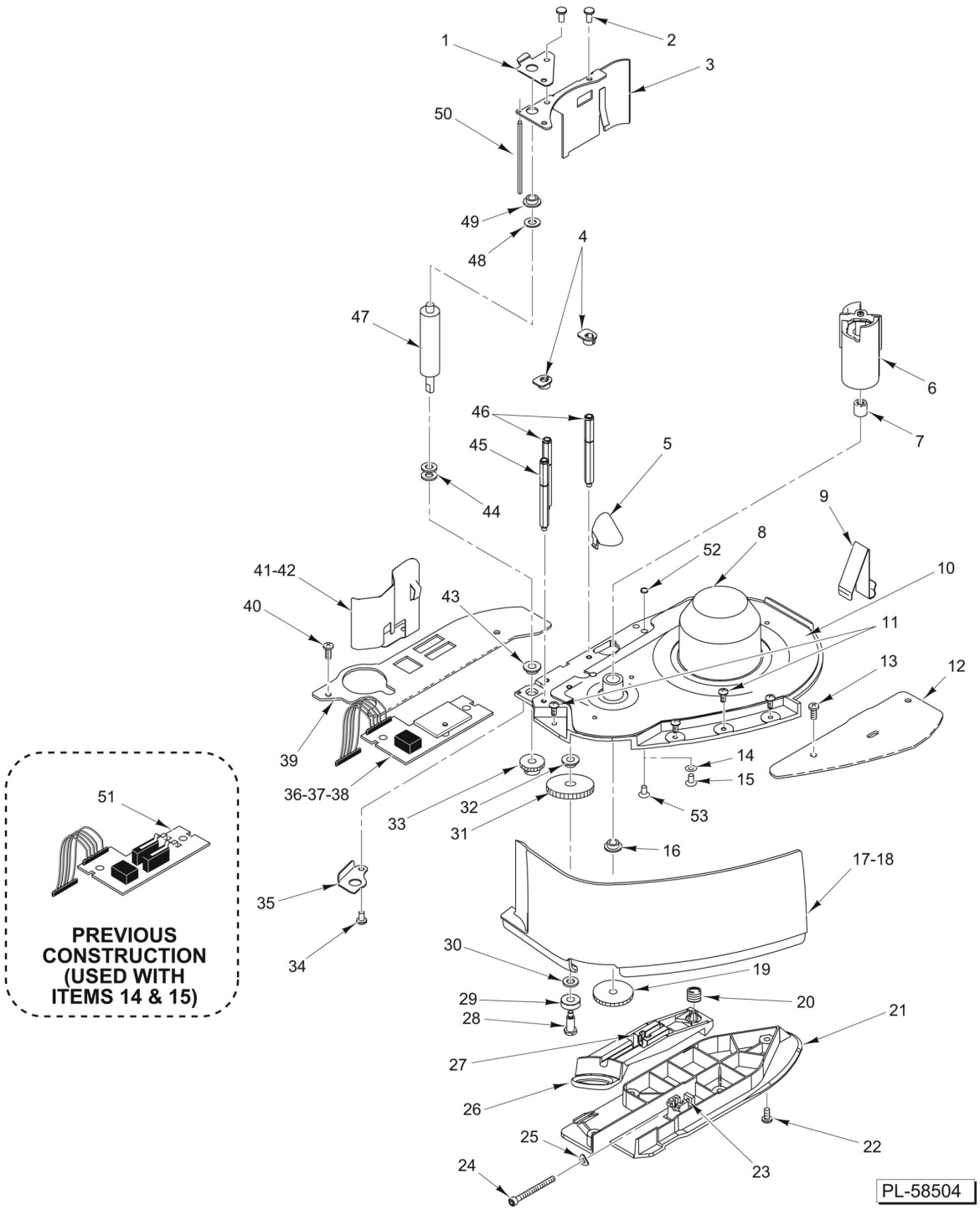


**CASSETTE**
**(WIDE LABEL)**

# CASSETTE
# (WIDE LABEL)

| ILLUS. PL-58504 | PART NO. | NAME OF PART | AMT. |
|---|---|---|---|
| 1 | 00-047456 | Plate - Cassette Locating (Upper) | 1 |
| 2 | 00-048489 | Mach. Screw 8-32 x 3/8 Phil. Pan Hd | 3 |
| 3 | 00-047392 | Retaining Plate - Roller | 1 |
| 4 | 00-043369 | Guide - Label | 2 |
| 5 | 00-043367 | Reflector | 1 |
| 6 | 00-444660 | Take-Up Assy | 1 |
| 7 | 00-043396 | Needle Bearing | 1 |
| 8 | 00-043351 | Base - Cassette | 1 |
| 9 | 00-443735 | Spring - Cassette Eject | 1 |
| 10 | 00-440635 | Label - Threading Instructions | 1 |
| 11 | SA-021-39 | Screw Assy. 8-32 x 3/8 Phil. Pan Hd | 4 |
| 12 | 00-043343 | Rail - Guide (RH) | 1 |
| 13 | SD-015-40 | Self-Tapping Screw 8-32 x 3/8 Phil. Pan Hd., Type TT | 2 |
| 14 | WS-019-13 | NLA - Obsolete--Washer (Previous Construction) | 1 |
| 15 | 00-043259 | Rivet - Snap (Nylon) (Previous Construction) | 1 |
| 16 | 00-043365 | Bushing | 1 |
| 17 | 00-443634-00002 | Cover - Cassette Front (Dark Gray) | 1 |
| 18 | 00-443634-00003 | Cover - Cassette Front (Black) (Units Starting With Serial Number 45-1055-510) | 1 |
| 19 | 00-043362 | Gear - Take-Up (Incls. Set Screw) | 1 |
| 20 | 00-043356 | Spring - Cassette Latch | 1 |
| 21 | 00-043355 | Guide - Cassette | 1 |
| 22 | SD-015-40 | Self-Tapping Screw 8-32 x 3/8 Phil. Pan Hd., Type TT | 4 |
| 23 | NS-008-25 | Nut 8-32 Sq. Hd | 1 |
| 24 | 00-441172 | Cap Screw 8-32 x 1-3/4 Hex Socket Hd | 1 |
| 25 | 00-043271 | Washer - Wavy | 1 |
| 26 | 00-043353 | Latch - Cassette | 1 |
| 27 | 00-043354 | Pivot Block - Adjust | 1 |
| 28 | 00-043363 | Shaft - Idler | 1 |
| 29 | 00-131761 | Ball Bearing - Double-Shielded Radial | 1 |
| 30 | 00-043269 | Washer | 1 |
| 31 | 00-032974 | Gear - Idler (Incls. Item 32) | 1 |
| 32 | 00-043365 | Bushing | 1 |
| 33 | 00-043360 | Gear - Roller (Incls. Set Screw) | 1 |
| 34 | SC-018-34 | Mach. Screw 8-32 x 1/2 Phil. Pan Hd | 1 |
| 35 | 00-047457 | Plate - Cassette Locating (Lower) | 1 |
| 36 | 00-446820 | Kit - Media Hall Sensor (Incls. Item 52) | 1 |
| 37 | 00-044631 | Insulator - Media Sensor Board | 1 |
| 38 | SD-015-40 | Self-Tapping Screw 8-32 x 3/8 Phil. Pan Hd., Type TT | 2 |
| 39 | 00-043270 | Rail - Guide (LH) | 1 |
| 40 | SD-015-40 | Self-Tapping Screw 8-32 x 3/8 Phil. Pan Hd., Type TT | 2 |
| 41 | 00-046479 | Spring - Label Guide | 1 |
| 42 | SD-015-40 | Self-Tapping Screw 8-32 x 3/8 Phil. Pan Hd., Type TT | 1 |
| 43 | 00-047458 | Bearing - Flange | 1 |
| 44 | 00-043269 | Washer | 2 |
| 45 | 00-047455 | Standoff | 1 |
| 46 | 00-032914 | Standoff | 2 |
| 47 | 00-047506 | Roller - Print | 1 |
| 48 | 00-043269 | Washer | 1 |
| 49 | 00-043365 | Bushing | 1 |
| 50 | 00-043357 | Peel Bar | 1 |
| 51 | 00-043538 | Board Assy. - Sensor (Previous Construction) | 1 |
| 52 | 00-446589 | Magnet - Disc | 1 |
| 53 | 00-446917 | Mach. Screw 8-32 x 1/8 Phil. Pan Hd | 1 |
| | 00-444875-00003 | Cassette - Assembly Black | 1 |

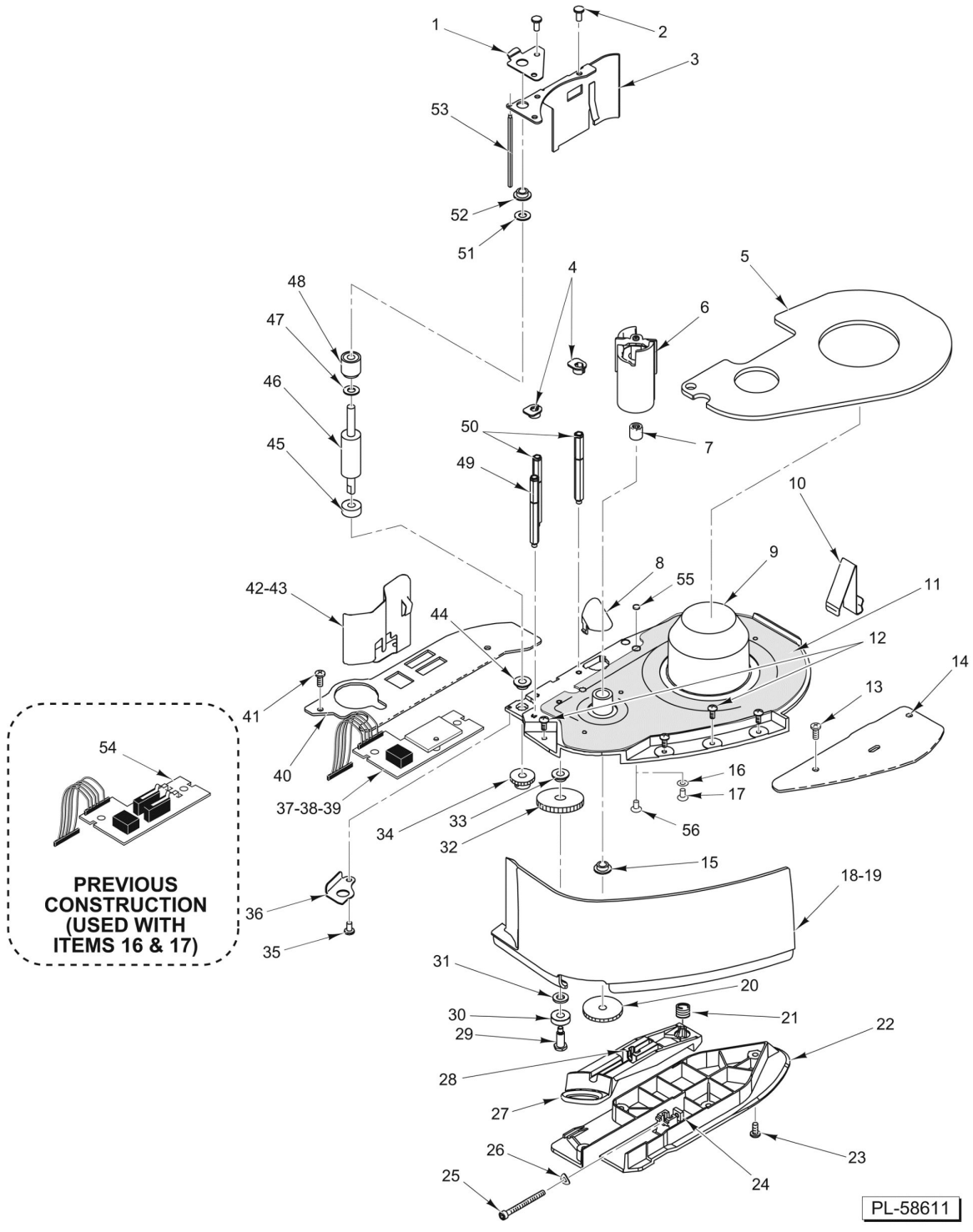


**CASSETTE**
**(NARROW LABEL)**

# CASSETTE
# (NARROW LABEL)

| ILLUS. PL-58611 | PART NO. | NAME OF PART | AMT. |
|---|---|---|---|
| 1 | 00-047456 | Plate - Cassette Locating (Upper) | 1 |
| 2 | 00-048489 | Mach. Screw 8-32 x 3/8 Phil. Pan Hd | 3 |
| 3 | 00-047392 | Retaining Plate - Roller | 1 |
| 4 | 00-043369 | Guide - Label | 2 |
| 5 | 00-032905 | Spacer - Narrow Label | 1 |
| 6 | 00-444660 | Take-Up Assy | 1 |
| 7 | 00-043396 | Needle Bearing | 1 |
| 8 | 00-043367 | Reflector | 1 |
| 9 | 00-043351 | Base - Cassette | 1 |
| 10 | 00-443735 | Spring - Cassette Eject | 1 |
| 11 | 00-440635 | Label - Threading Instructions | 1 |
| 12 | SA-021-39 | Screw Assy. 8-32 x 3/8 Phil. Pan Hd | 4 |
| 13 | SD-015-40 | Self-Tapping Screw 8-32 x 3/8 Phil. Pan Hd., Type TT | 2 |
| 14 | 00-043343 | Rail - Guide (RH) | 1 |
| 15 | 00-043365 | Bushing | 1 |
| 16 | WS-019-13 | NLA - Obsolete--Washer (Previous Construction) | 1 |
| 17 | 00-043259 | Rivet - Snap (Nylon) (Previous Construction) | 1 |
| 18 | 00-443634-00002 | Cover - Cassette Front (Dark Gray) | 1 |
| 19 | 00-443634-00003 | Cover - Cassette Front (Black) (Units Starting With Serial Number 45-1055-510) | 1 |
| 20 | 00-043362 | Gear - Take-Up (Incls. Set Screw) | 1 |
| 21 | 00-043356 | Spring - Cassette Latch | 1 |
| 22 | 00-043355 | Guide - Cassette | 1 |
| 23 | SD-015-40 | Self-Tapping Screw 8-32 x 3/8 Phil. Pan Hd., Type TT | 4 |
| 24 | NS-008-25 | Nut 8-32 Sq. Hd | 1 |
| 25 | 00-441172 | Cap Screw 8-32 x 1-3/4 Hex Socket Hd | 1 |
| 26 | 00-043271 | Washer - Wavy | 1 |
| 27 | 00-043353 | Latch - Cassette | 1 |
| 28 | 00-043354 | Pivot Block - Adjust | 1 |
| 29 | 00-043363 | Shaft - Idler | 1 |
| 30 | 00-131761 | Ball Bearing - Double-Shielded Radial | 1 |
| 31 | 00-043269 | Washer | 1 |
| 32 | 00-032974 | Gear - Idler (Incls. Item 33) | 1 |
| 33 | 00-043365 | Bushing | 1 |
| 34 | 00-043360 | Gear - Roller (Incls. Set Screw) | 1 |
| 35 | SC-018-34 | Mach. Screw 8-32 x 1/2 Phil. Pan Hd | 1 |
| 36 | 00-047457 | Plate - Cassette Locating (Lower) | 1 |
| 37 | 00-446820 | Kit - Media Hall Sensor (Incls. Item 55) | 1 |
| 38 | 00-044631 | Insulator - Media Sensor Board | 1 |
| 39 | SD-015-40 | Self-Tapping Screw 8-32 x 3/8 Phil. Pan Hd., Type TT | 2 |
| 40 | 00-043270 | Rail - Guide (LH) | 1 |
| 41 | SD-015-40 | Self-Tapping Screw 8-32 x 3/8 Phil. Pan Hd., Type TT | 2 |
| 42 | 00-046479 | Spring - Label Guide | 1 |
| 43 | SD-015-40 | Self-Tapping Screw 8-32 x 3/8 Phil. Pan Hd., Type TT | 1 |
| 44 | 00-047458 | Bearing - Flange | 1 |
| 45 | 00-032930 | Spacer - Narrow Roller Bottom | 1 |
| 46 | 00-047505 | Roller - Print | 1 |
| 47 | 00-032915 | Spacer - Narrow Roller | 1 |
| 48 | 00-047504 | Support - Roller | 1 |
| 49 | 00-047455 | Standoff | 1 |
| 50 | 00-032914 | Standoff | 2 |
| 51 | 00-043269 | Washer | 1 |
| 52 | 00-043365 | Bushing | 1 |
| 53 | 00-043357 | Peel Bar | 1 |
| 54 | 00-043538 | Board Assy. - Sensor (Previous Construction) | 1 |
| 55 | 00-446589 | Magnet - Disc | 1 |
| 56 | 00-446917 | Mach. Screw 8-32 x 1/8 Phil. Pan Hd | 1 |
| | 00-447770 | Cassette Assy. - Narrow Label | 1 |

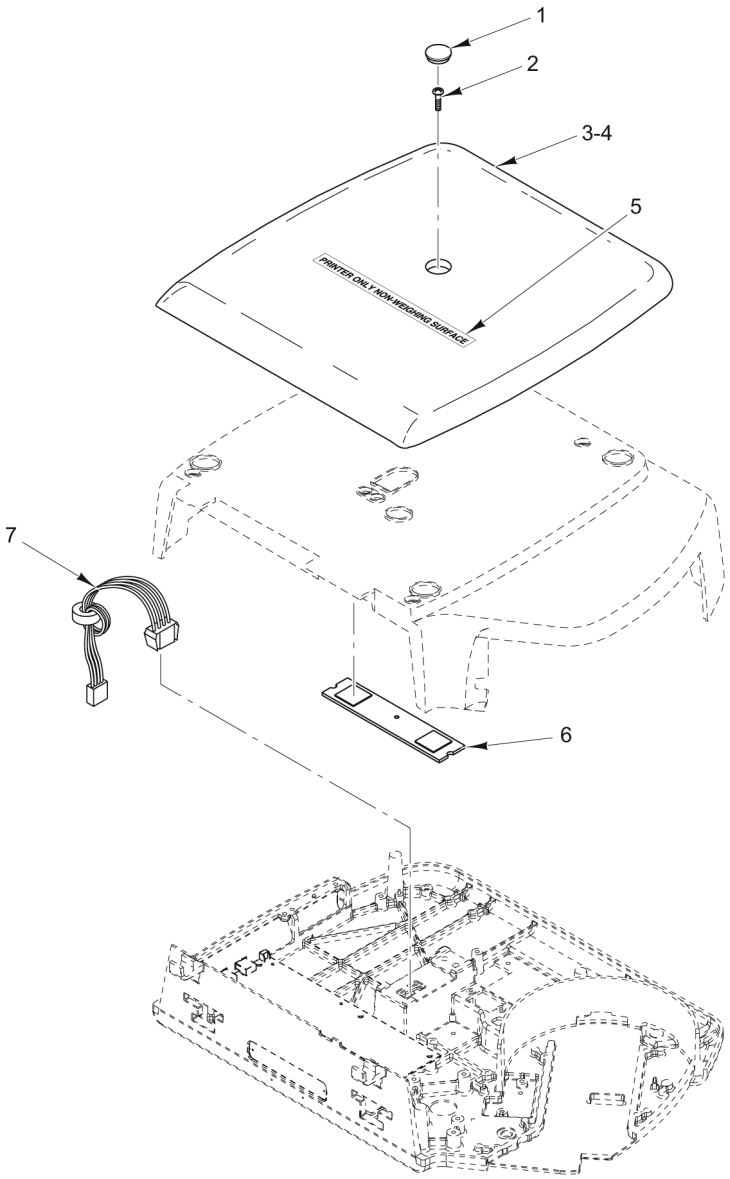


**PRINTER ONLY**
**(ML-29287)**
**(USED WITH TWO-PIECE SCALE/PRINTER)**

## PRINTER ONLY
## (ML-29287)
## (USED WITH TWO-PIECE SCALE/PRINTER)

| ILLUS. PL-58612 | PART NO. | NAME OF PART | AMT. |
|---|---|---|---|
| 1 | 00-445214-00002 | Plug - Cover | 1 |
| 2 | SC-018-31 | Mach. Screw 8-32 x 3/8 Phil. Pan Hd | 1 |
| 4 | 00-445262-00003 | Cover - Printer Top (Black) (Units Starting With Serial Number 45-1055-510) | 1 |
| 5 | 00-445215 | Label - Printer | 1 |
| 6 | 00-440726 | Bracket Assy. - Cover | 1 |
| 7 | 00-445270-00001 | Cable Assy | 1 |

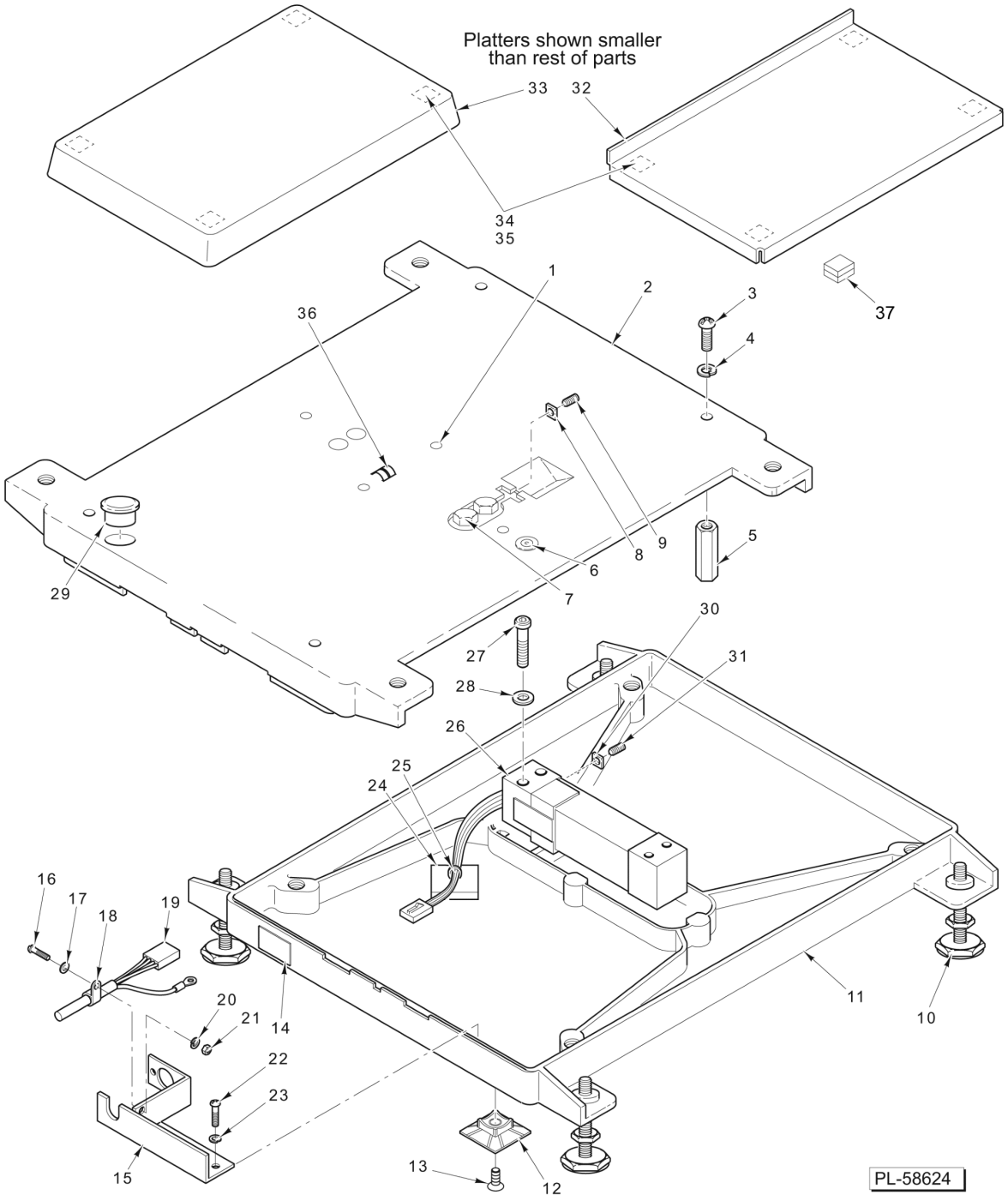


**SCALE UNIT**
**(USED WITH ML-29287)**
**(USED WITH TWO-PIECE SCALE/PRINTER)**

# SCALE UNIT
# (USED WITH ML-29287)
# (USED WITH TWO-PIECE SCALE/PRINTER)

| ILLUS. PL-58624 | PART NO. | NAME OF PART | AMT. |
|---|---|---|---|
| 1 | SC-123-20 | Set Screw 10-32 x 3/8 Hex Hdls., Socket Hd | 2 |
| 2 | 00-041559 | Support - Platter | 1 |
| 3 | SC-113-08 | Mach. Screw 10-32 x 1/2 Phil. Pan Hd | 4 |
| 4 | WL-004-40 | Lockwasher 10 Helical | 4 |
| 5 | 00-441780 | Stop - Loadcell | 4 |
| 6 | 00-013931 | Level - Spirit | 1 |
| 7 | SC-110-12 | Cap Screw 1/4-20 x 5/8 Hex Hd | 2 |
| 8 | NS-046-58 | Nut 10-32 Square | 1 |
| 9 | SC-123-20 | Set Screw 10-32 x 3/8 Hex Hdls., Socket Hd | 1 |
| 10 | 00-093160 | Foot - Leveling Screw | 4 |
| 11 | 00-042604 | Base Assy | 1 |
| 12 | 00-446051 | Holder - Tie-Down | 1 |
| 13 | SC-022-07 | Mach. Screw 8-32 x 1/2 Slotted Flat Hd. (SST) | 1 |
| 14 | 00-184534 | Label - Capacity | 1 |
| 15 | 00-441657 | Clamp - Cable | 1 |
| 16 | SC-018-31 | Mach. Screw 8-32 x 3/8 Phil. Pan Hd | 1 |
| 17 | WS-019-41 | Washer (SST) | 1 |
| 18 | 00-253363 | Clamp | 1 |
| 19 | 00-183634 | Cable - Scale | 1 |
| 20 | WL-003-12 | Lockwasher #8 Helical | 1 |
| 21 | NS-009-12 | Nut 8-32 Hex | 1 |
| 22 | SC-018-31 | Mach. Screw 8-32 x 3/8 Phil. Pan Hd | 2 |
| 23 | WL-003-12 | Lockwasher #8 Helical | 2 |
| 24 | 00-255503 | Mount - Cable Tie | 1 |
| 25 | 00-251199 | Tie - Cable (4 In. Long) | 1 |
| 26 | 00-443075 | Load Cell - Multiple Range (15 kg) | 1 |
| 27 | SC-120-70 | Cap Screw 1/4-20 x 1-5/8 Hex Socket Hd | 2 |
| 28 | WL-003-39 | Lockwasher 1/4 Light | 2 |
| 29 | 00-041562 | Plug - Transparent (1/2) | 1 |
| 30 | NS-046-58 | Nut 10-32 Square | 1 |
| 31 | SC-123-20 | Set Screw 10-32 x 3/8 Hex Hdls., Socket Hd | 1 |
| 32 | 00-043813 | Platter (Incls. Items 34 & 35) | 1 |
| 33 | 00-043812 | Platter (Incls. Items 34 & 35) | 1 |
| 34 | 00-258959 | Fastener - Dual Lock | 4 |
| 35 | 00-258958 | Fastener - Dual Lock | 4 |
| 36 | 00-184929 | Contact - Compression Spring (Qty. of 8) | AR |
| 37 | 00-259185 | Pad - Platter | 4 |

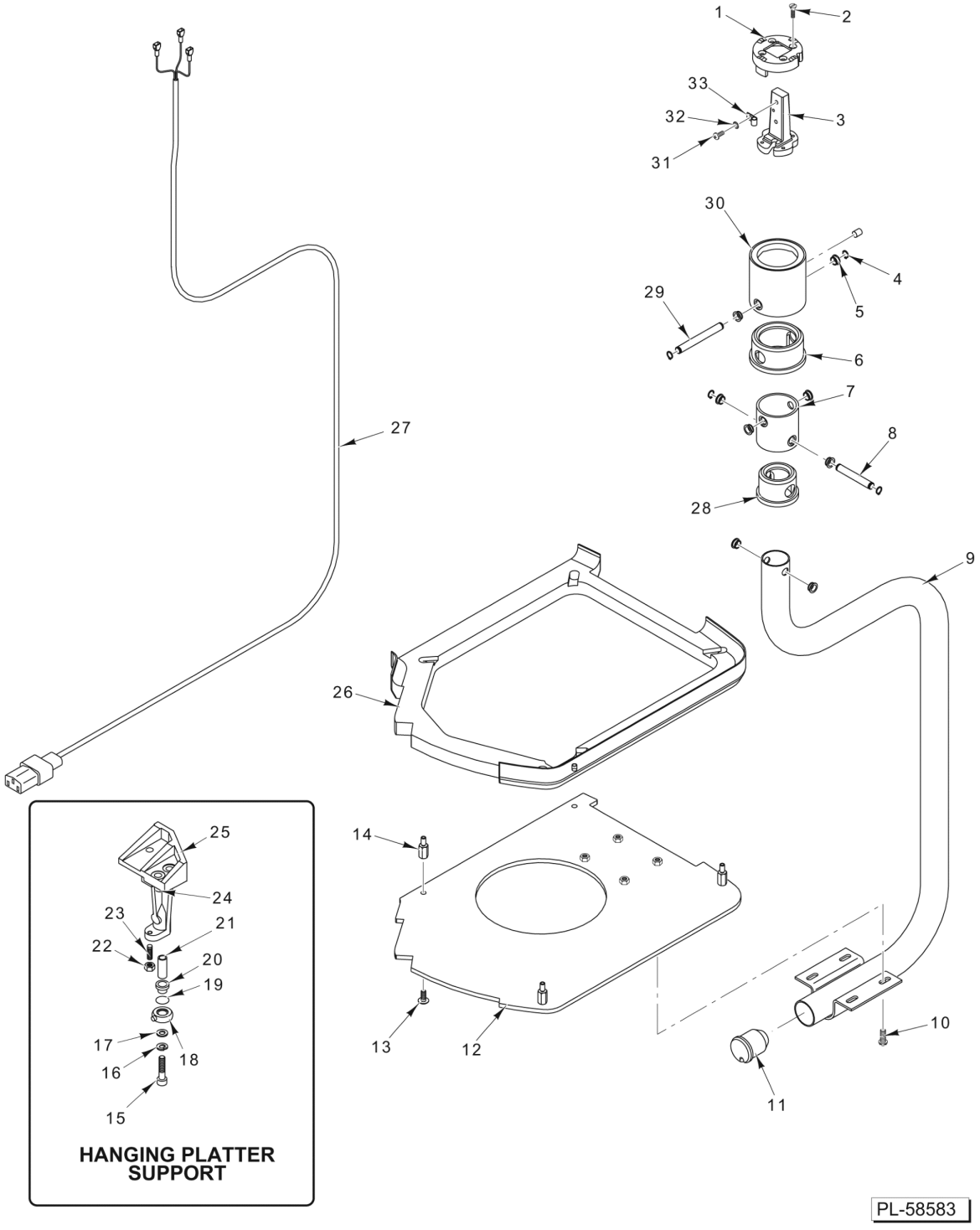


**HANGING SCALE SUPPORT UNIT (ML-29288)**

## HANGING SCALE SUPPORT UNIT (ML-29288)

| ILLUS. PL-58583 | PART NO. | NAME OF PART | AMT. |
|---|---|---|---|
| 1 | 00-440668 | Detent - Lower | 1 |
| 2 | SC-119-95 | Mach. Screw 10-24 x 1/2 Phil. Flat Hd | 4 |
| 3 | 00-440667 | Detent - Support | 1 |
| 4 | RR-006-21 | Retaining Ring | 4 |
| 5 | 00-041488 | Bearing (Nyliner) | 8 |
| 6 | 00-440185 | Cap - Upper Tube | 1 |
| 7 | 00-440252 | Tube - Lower Hanger | 1 |
| 8 | 00-440253 | Shaft - Lower Tube | 1 |
| 9 | 00-440163 | Tubing Assy. - Support | 1 |
| 10 | SC-053-42 | Mach. Screw 1/4-20 x 5/8 Slotted Truss Hd. (SST) | 4 |
| 11 | 00-440933 | Plug - Tube | 1 |
| 12 | 00-440678 | Base Plate | 1 |
| 13 | SC-053-42 | Mach. Screw 1/4-20 x 5/8 Slotted Truss Hd. (SST) | 4 |
| 14 | 00-440188 | Gasket - Spacer | 4 |
| 15 | SC-120-70 | Cap Screw 1/4-20 x 1-5/8 Hex Socket Hd | 1 |
| 16 | WL-006-17 | Lockwasher 1/4 Helical (SST) | 1 |
| 17 | WS-022-01 | Washer | 1 |
| 18 | 00-440135 | Ball - Pivot | 1 |
| 19 | 00-440194 | O-Ring | 1 |
| 20 | 00-440186 | Spacer - Ball Pivot | 1 |
| 21 | 00-440187 | Spacer | 1 |
| 22 | NS-009-12 | Nut 8-32 Hex | 1 |
| 23 | SC-110-42 | Set Screw 8-32 x 1/2 Slotted Hdls., Cup Pt | 1 |
| 24 | 00-043286 | Screw - Overload | 1 |
| 25 | 00-440094 | Platter - Support | 1 |
| 26 | 00-445273-00002 | Gasket - Base | 1 |
| 27 | 00-445263 | Cord Assy. - Power | 1 |
| 28 | 00-440184 | Cap - Support Tube | 1 |
| 29 | 00-440257 | Shaft - Upper Tube | 1 |
| 30 | 00-440256 | Tube Assy. - Upper | 1 |
| 31 | SC-123-76 | Mach. Screw 10-24 x 1/2 Phil. Pan Hd | 1 |
| 32 | WL-014-07 | Lockwasher #10 External Shakeproof (SST) | 1 |
| 33 | 00-030695 | Clip | 1 |

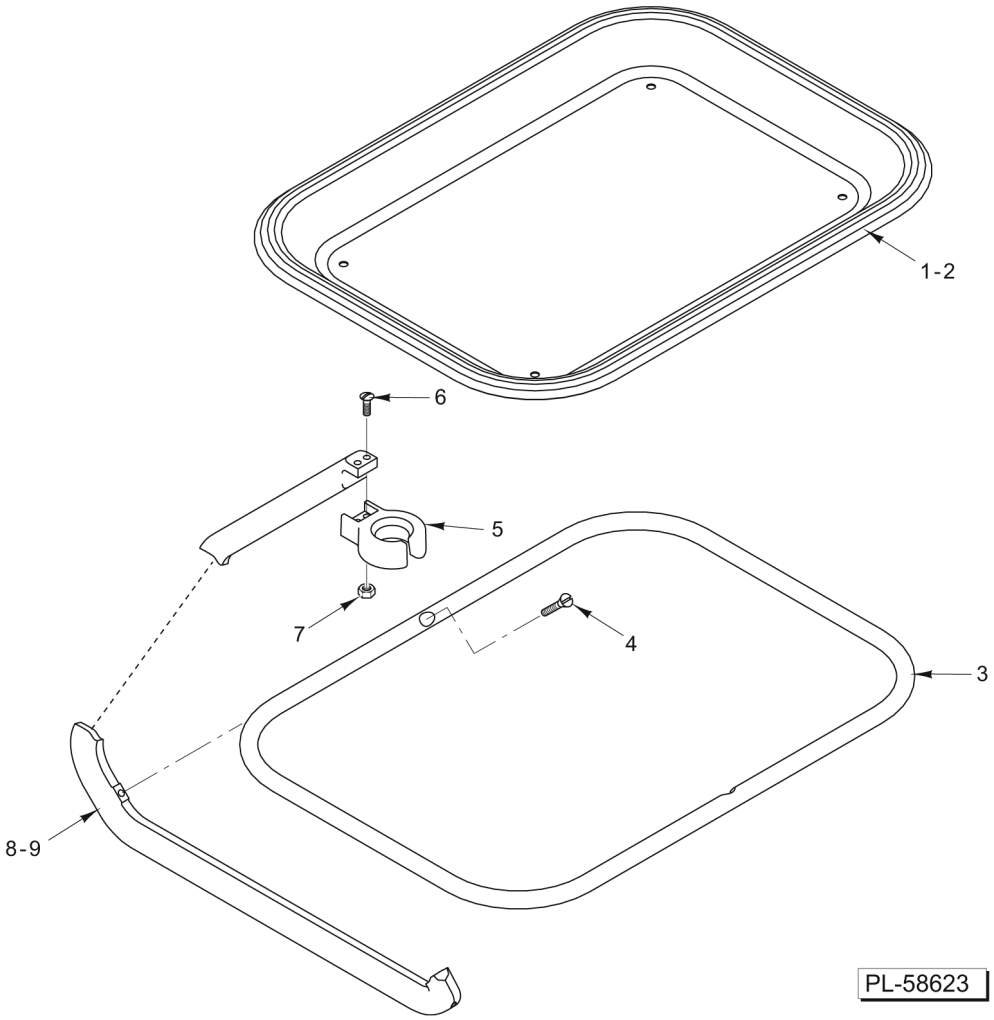


**PAN AND ARM (ML-29288)**

## PAN AND ARM (ML-29288)

| ILLUS. PL-58623 | PART NO. | NAME OF PART | AMT. |
|---|---|---|---|
| 1 | 00-440051 | Pan (2-In. Deep) | 1 |
| 2 | 00-440052 | Pan (1-In. Deep) (Shown) | 1 |
| 3 | 00-440110 | Ring - Pan Support | 1 |
| 4 | SC-015-36 | Mach. Screw 10-24 x 5/8 Slotted Oval Hd | 2 |
| 5 | 00-440114 | Cup - Swivel | 1 |
| 6 | SC-015-36 | Mach. Screw 10-24 x 5/8 Slotted Oval Hd | 2 |
| 7 | NS-011-18 | Nut 10-24 Hex (SST) | 2 |
| 8 | 00-440106 | Arm - Support (10 In.) | 1 |
| 9 | 00-440107 | Arm - Support (15 In.) | 1 |
| | 00-440673 | Arm Assy. - Pan (10 In.) (Incls. Items 3 thru 8) | 1 |
| | 00-440674 | Arm Assy. - Pan (15 In.) (Incls. Items 3 thru 7 & 9) | 1 |

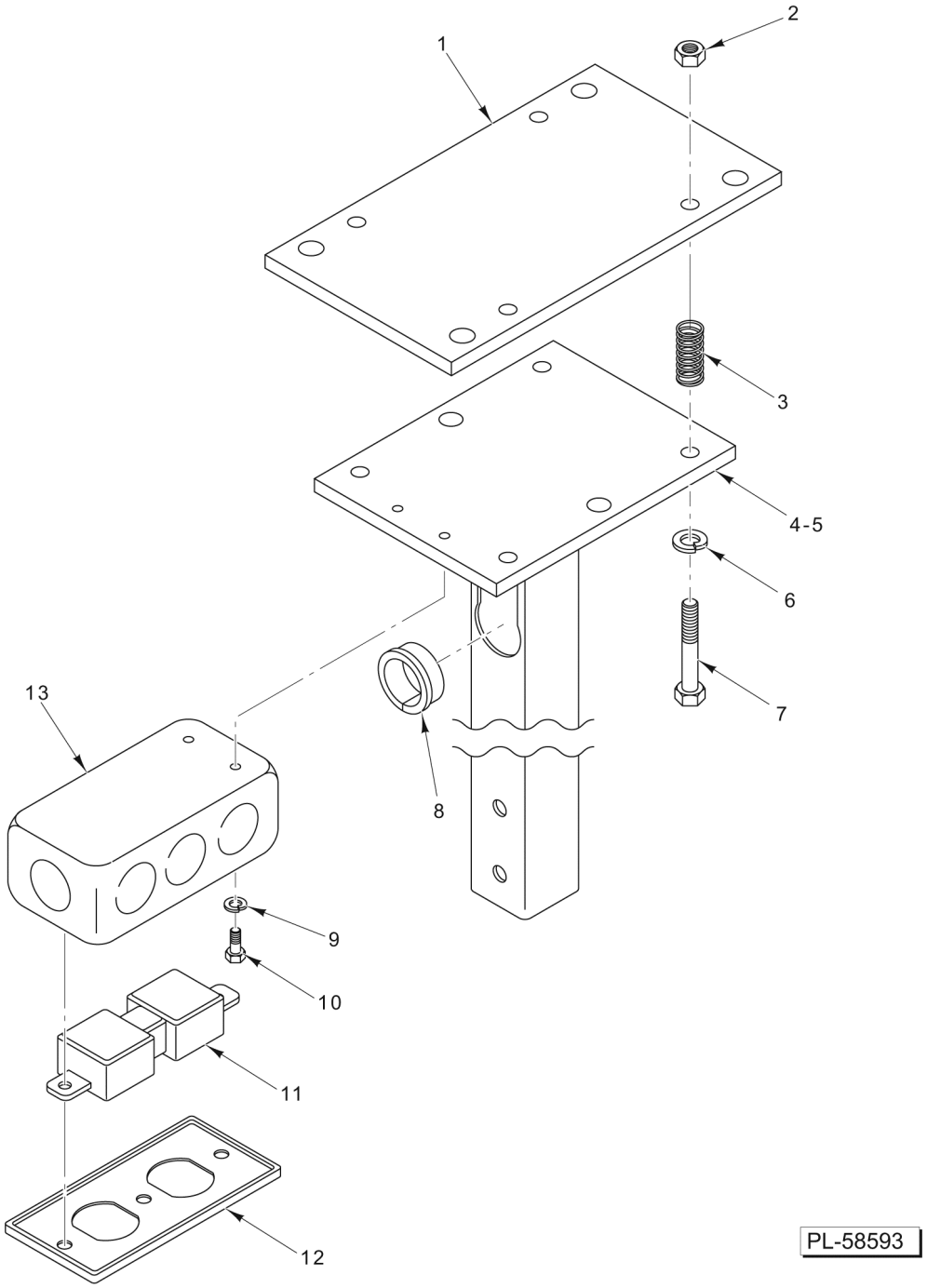


**STATIONARY MOUNT ASSEMBLY**
**(USED WITH HANGING SCALE)**

## STATIONARY MOUNT ASSEMBLY
## (USED WITH HANGING SCALE)

| ILLUS. PL-58593 | PART NO. | NAME OF PART | AMT. |
|---|---|---|---|
| 1 | 00-044126 | Plate - Mounting | 1 |
| 2 | NS-038-04 | Lock Nut 1/4-20 | 4 |
| 3 | 00-044219 | Spring - Trolley | 4 |
| 4 | 00-044087 | Tube Assy. (6 Ft.) | 1 |
| 5 | 00-044340 | Tube Assy. (9 Ft.) | 1 |
| 6 | WL-003-38 | Lockwasher 1/4 Helical | 4 |
| 7 | SC-097-15 | Cap Screw 1/4-20 x 1-5/8 Hex Hd | 4 |
| 8 | FE-024-43 | Bushing - Split (Electrical) | 1 |
| 9 | WL-004-40 | Lockwasher 10 Helical | 2 |
| 10 | SC-018-14 | Mach. Screw 10-32 x 3/8 Slotted Pan Hd | 2 |
| 11 | FE-010-04 | Receptacle - Electrical | 1 |
| 12 | FE-004-52 | Cover - Electrical | 1 |
| 13 | FE-003-03 | Box - Conduit | 1 |
| | 00-044521 | Plate - Spacer | 1 |

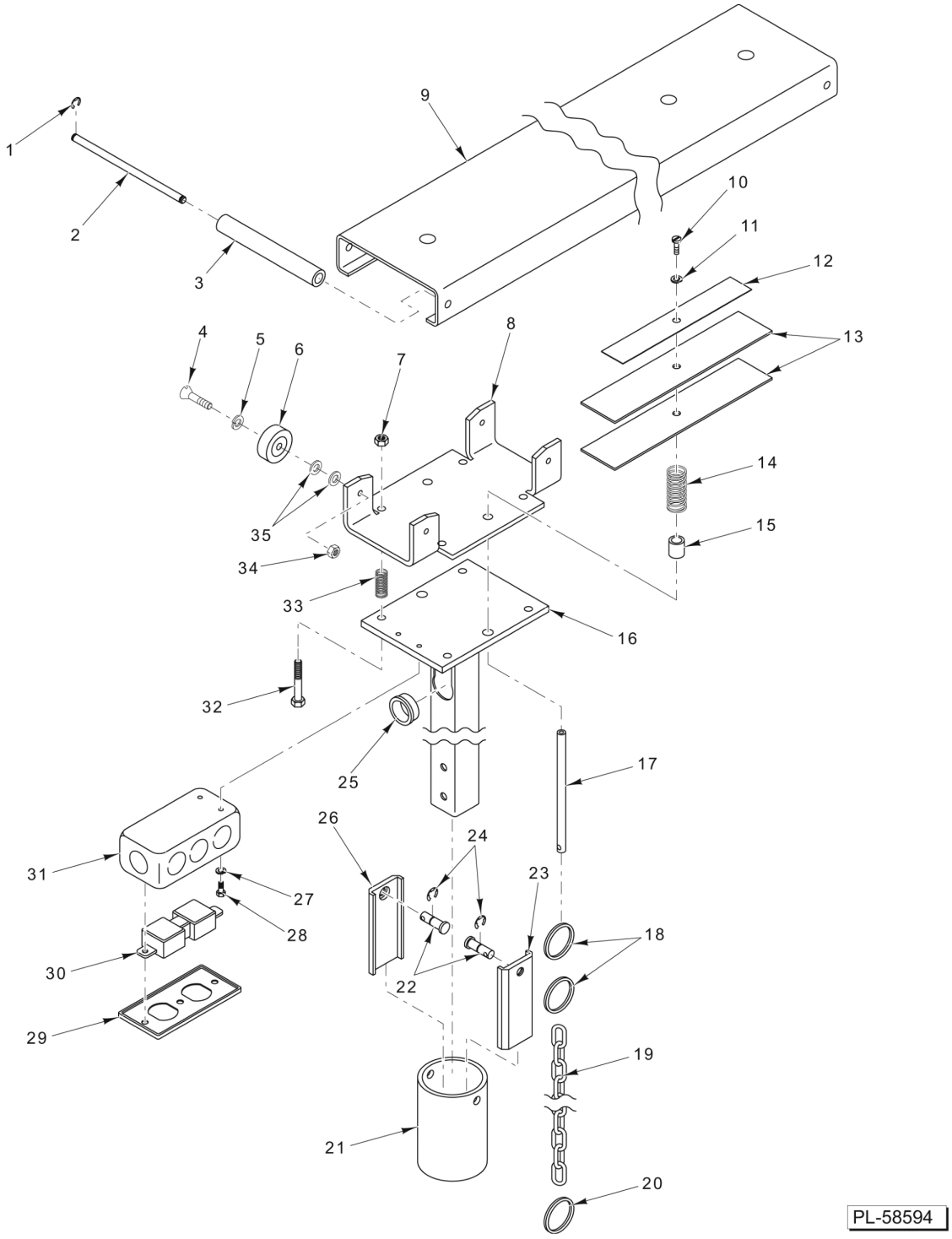


**MOVEABLE MOUNT ASSEMBLY**
**(USED WITH HANGING SCALE)**

## MOVEABLE MOUNT ASSEMBLY (USED WITH HANGING SCALE)

| ILLUS. PL-58594 | PART NO. | NAME OF PART | AMT. |
|---|---|---|---|
| 1 | RR-004-26 | Retaining Ring | 4 |
| 2 | 00-044504 | Stop - Trolley | 2 |
| 3 | 00-044505 | Tubing - Trolley Stop | 2 |
| 4 | SC-022-35 | Mach. Screw 1/4-20 x 1 Slotted Flat Hd. (SST) | 4 |
| 5 | WL-003-38 | Lockwasher 1/4 Helical | 4 |
| 6 | 00-044500 | Wheel Assy. - Trolley | 4 |
| 7 | NS-018-01 | Jam Nut 1/4-20 Hex (SST) | 4 |
| 8 | 00-044468 | NLA - Obsolete--Frame - Trolley | 1 |
| 9 | 00-044496 | NLA - Obsolete--Track - Scale Mount | 1 |
| 10 | SC-018-14 | Mach. Screw 10-32 x 3/8 Slotted Pan Hd | 1 |
| 11 | WL-004-40 | Lockwasher 10 Helical | 1 |
| 12 | 00-044317 | Spring - Flat | 2 |
| 13 | 00-044092 | Spring - Flat | 4 |
| 14 | 00-332402 | Spring - Underfolder | 2 |
| 15 | 00-044467 | Limiter - Release | 2 |
| 16 | 00-044087 | Tube Assy. (6 Ft.) | 1 |
| 17 | 00-044093 | Pin - Spring | 2 |
| 18 | 00-044239 | Ring - Brake | 4 |
| 19 | 00-044452 | Chain - Brake | 1 |
| 20 | 00-044239 | Ring - Brake | 1 |
| 21 | 00-044509 | Sleeve - Brake Release | 1 |
| 22 | 00-044240 | Pin - Brake Release | 2 |
| 23 | 00-044499 | Guide - Brake Release | 1 |
| 24 | RR-004-02 | Retaining Ring | 2 |
| 25 | FE-024-43 | Bushing - Split (Electrical) | 1 |
| 26 | 00-044499 | Guide - Brake Release | 1 |
| 27 | WL-004-40 | Lockwasher 10 Helical | 1 |
| 28 | SC-018-14 | Mach. Screw 10-32 x 3/8 Slotted Pan Hd | 1 |
| 29 | FE-004-52 | Cover - Electrical | 1 |
| 30 | FE-010-04 | Receptacle - Electrical | 1 |
| 31 | FE-003-03 | Box - Conduit | 1 |
| 32 | SC-113-60 | Cap Screw 1/4-20 x 1 Hex Hd | 4 |
| 33 | 00-044219 | Spring - Trolley | 4 |
| 34 | NS-013-02 | Nut 1/4-20 Hex | 4 |
| 35 | WS-022-10 | Washer | 8 |

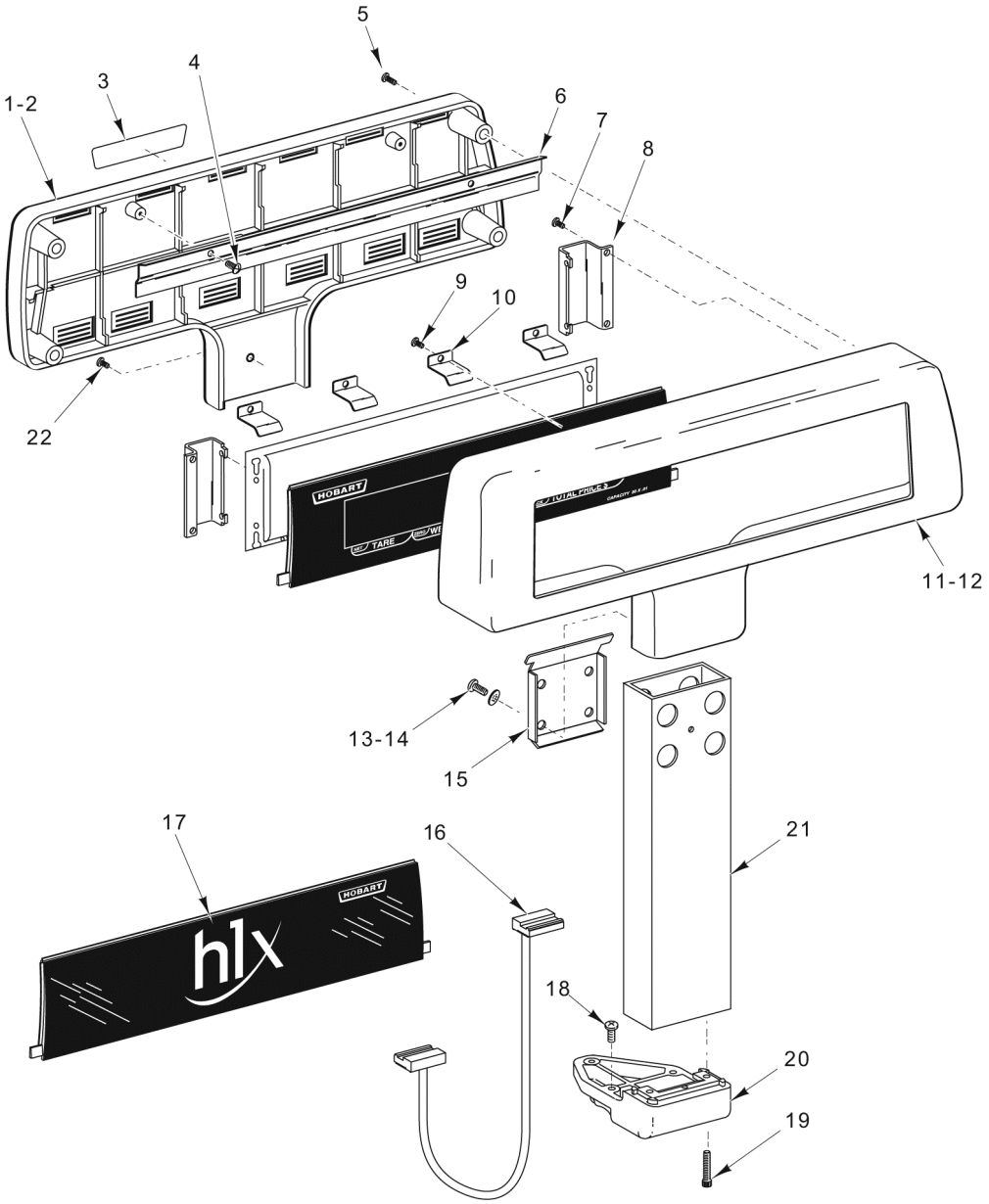


**ELEVATED DISPLAY OPTION**

## ELEVATED DISPLAY OPTION

| ILLUS. PL-58584 | PART NO. | NAME OF PART | AMT. |
|---|---|---|---|
| 1 | 00-445261-00002 | Housing - Rear Elevated Display (Dark Gray) | 1 |
| 2 | 00-445261-00003 | Housing - Rear Elevated Display (Black) (Units Starting With Serial Number 45-1055-510) | 1 |
| 3 | 00-117893-00003 | Logo | 1 |
| 4 | SD-037-71 | Self-Tapping Screw 6-19 x 5/16 Phil. Pan Hd | 2 |
| 5 | SD-037-72 | Self-Tapping Screw 6-19 x 1/2 Phil. Pan Hd | 4 |
| 6 | 00-043258 | Baffle - Elevated Display | 1 |
| 7 | SD-037-71 | Self-Tapping Screw 6-19 x 5/16 Phil. Pan Hd | 4 |
| 8 | 00-043399 | Bracket - VF Mount (Elevated Display) | 2 |
| 9 | SD-037-71 | Self-Tapping Screw 6-19 x 5/16 Phil. Pan Hd | 4 |
| 10 | 00-043398 | Bracket - Filter (Elevated Display) | 4 |
| 11 | 00-445260-00002 | Housing - Front Elevated Display (Dark Gray) | 1 |
| 12 | 00-445260-00003 | Housing - Front Elevated Display (Black) (Units Starting With Serial Number 45-1055-510) | 1 |
| 13 | SC-093-23 | Mach. Screw 10-24 x 3/8 Phil. Pan Hd | 4 |
| 14 | WL-013-11 | Lockwasher #10 Internal Shakeproof | 4 |
| 15 | 00-043397 | Bracket - Clamp | 1 |
| 16 | 00-445234 | Cable Assy. (Elevated Display) | 1 |
| 17 | 00-445233 | Panel - Rear Assy | 1 |
| 18 | SD-015-41 | Self-Tapping Screw 8-32 x 1/2 Phil. Pan Hd., Type TT | 3 |
| 19 | SC-059-15 | Cap Screw 10-24 x 1 Hex Socket Hd | 2 |
| 20 | 00-445259-00002 | Support - Elevated Display | 1 |
| 21 | 00-043329 | Post (12-1/8 Lg.) | 1 |
| 22 | SC-066-01 | Mach. Screw 6-32 x 1/4 Phil. Truss Hd | 1 |
| | 00-445235 | Display Assy. - Elevated | 1 |

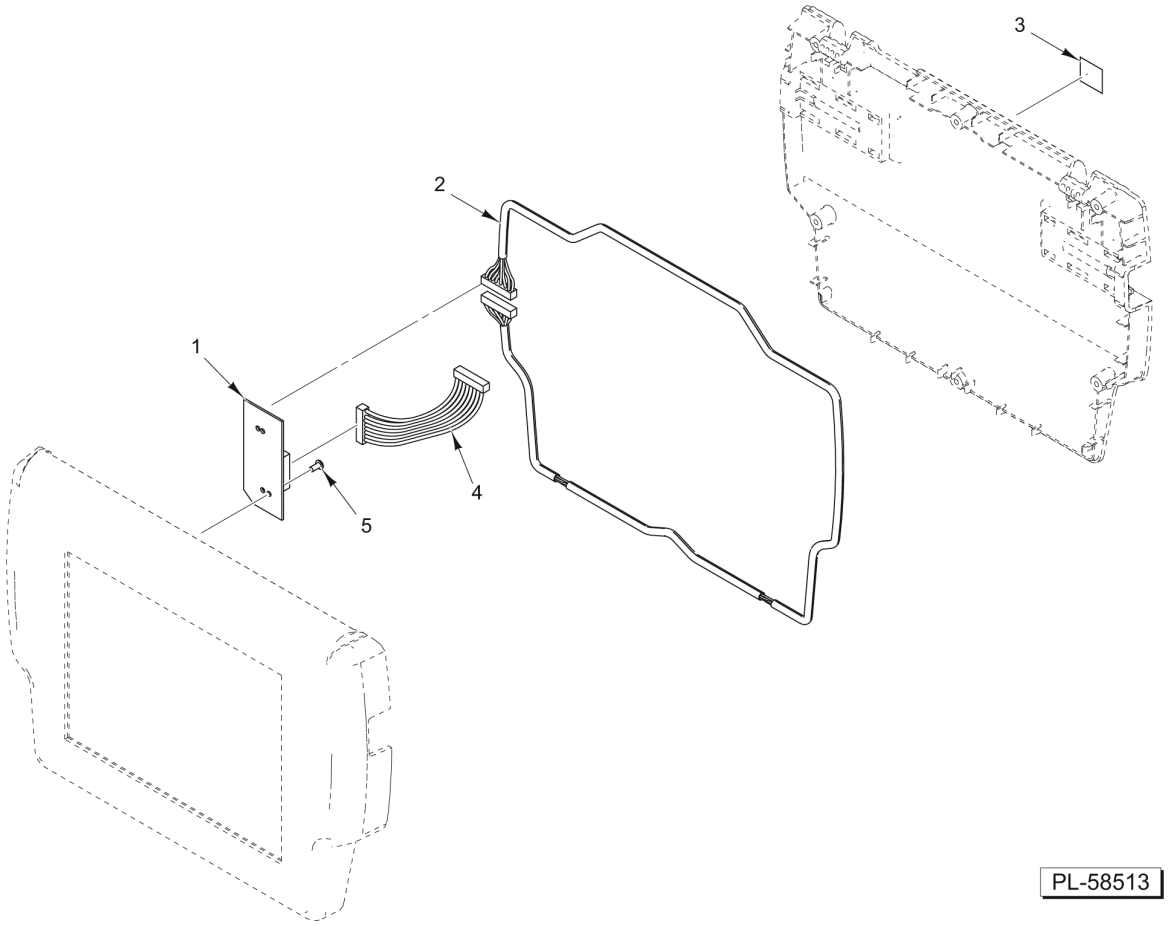


**RFID OPTION**

## RFID OPTION

| ILLUS. PL-58513 | PART NO. | NAME OF PART | AMT. |
|---|---|---|---|
| *1 | 00-445029 | Board Assy. (RFID) | 1 |
| 2 | 00-445099 | Cable Assy. (RFID Antenna) | 1 |
| 3 | 00-445128 | Label (RFID FCC) | 1 |
| 4 | 00-444847 | Cable Assy. (RFID) | 1 |
| 5 | SD-037-71 | Self-Tapping Screw 6-19 x 5/16 Phil. Pan Hd | 2 |
| | 00-447486 | Kit - Compact Flash Card Recovery | AR |

* (When replacing the RFID Board Assembly on HLX Scale with an application version of 3.1.57 or earlier, order 00-447486 Kit - Compact Flash Card Recovery.)

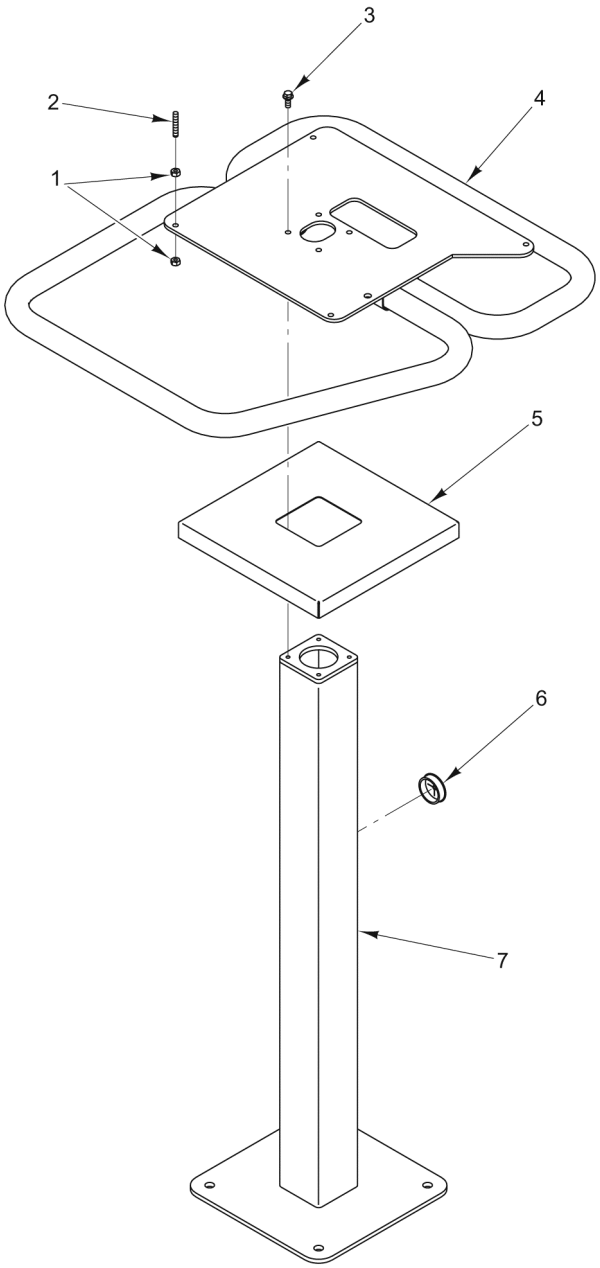


PL-59518

**SELF SERVICE STAND (ML-29309)**

## SELF SERVICE STAND (ML-29309)

| ILLUS. PL-59518 | PART NO. | NAME OF PART | AMT. |
|---|---|---|---|
| 1 | NS-015-01 | Nut 1/4-20 Hex (SST) | 8 |
| 2 | SC-049-04 | Set Screw 1/4-20 x 5/8 Hdls. Slotted Oval Pt | 4 |
| 3 | SC-129-50 | Mach. Screw 1/4-20 x 5/8 Hex Washer Hd. (SST) | 4 |
| 4 | 00-446091 | Stand Assy. - Upper | 1 |
| 5 | 00-446098 | Cover - Lower Stand | 1 |
| 6 | FE-026-28 | Bushing - Electric Snap | 1 |
| 7 | 00-446092 | Stand Assy. - Lower | 1 |

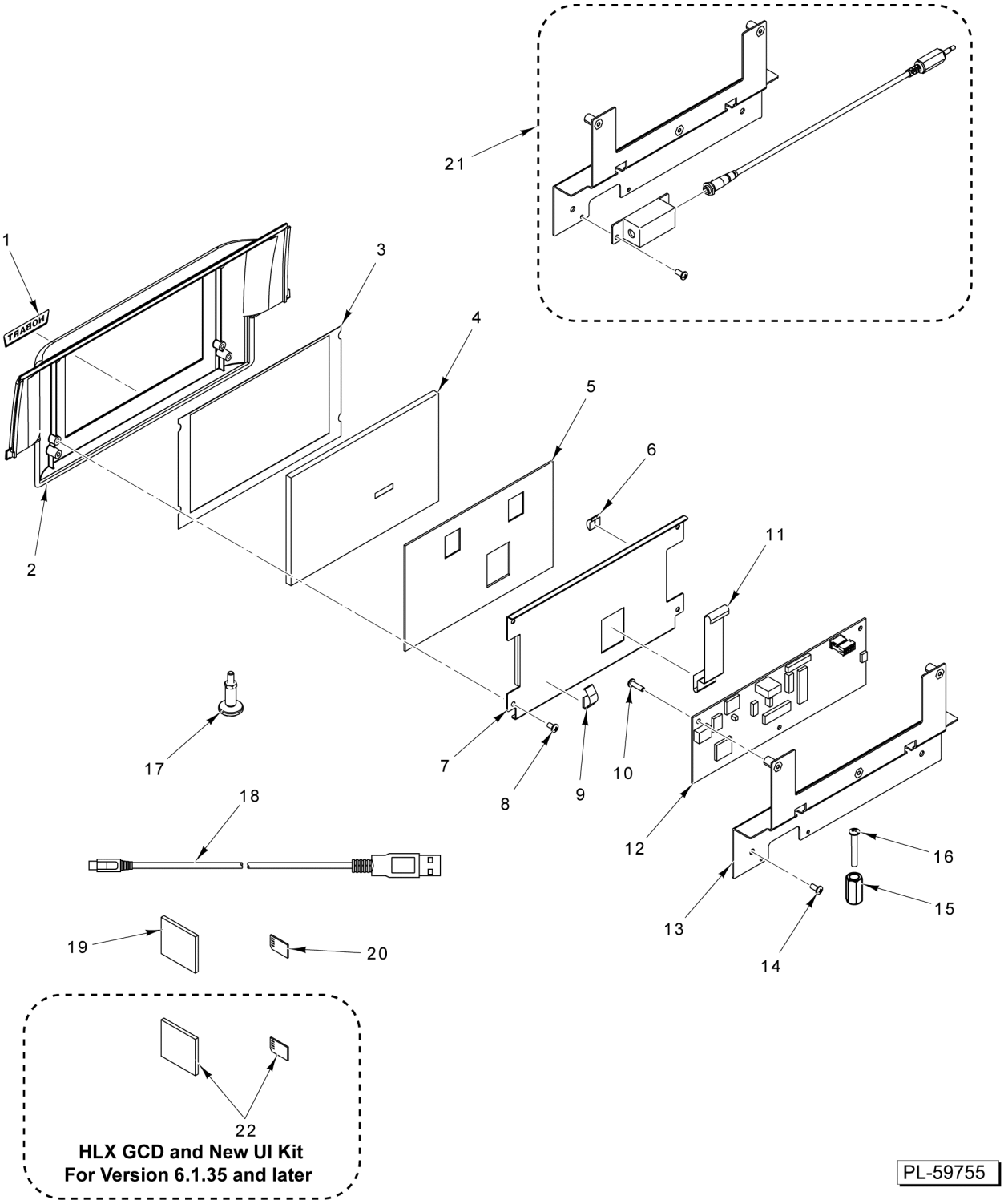


## GRAPHICAL CUSTOMER DISPLAY PARTS

## GRAPHICAL CUSTOMER DISPLAY PARTS

| ILLUS. PL-59755 | PART NO. | NAME OF PART | AMT. |
|---|---|---|---|
| 1 | 00-044953 | Logo - Hobart (Plate) | 1 |
| 2 | 00-446261-00003 | Housing - Color (Customer Display) | 1 |
| 3 | 00-446256 | Gasket - Seal | 1 |
| 4 | 00-446537 | Display | 1 |
| 5 | 00-446257 | Gasket - Pressure | 1 |
| 6 | 00-446915 | Contact - Finger (2 Tab) | 2 |
| 7 | 00-446258 | Bracket - Display Mounting | 1 |
| 8 | SD-037-75 | Self-Tapping Screw 6-19 x 1/4 Phil. Pan Hd | 4 |
| 9 | 00-257114 | Contact - Finger | 2 |
| 10 | SC-112-42 | Mach. Screw 6-32 x 1/2 Phil. Pan Hd | 3 |
| 11 | 00-446540 | Cable | 1 |
| 12 | 00-446432 | Board - Control (GCD) | 1 |
| 13 | 00-446259 | Bracket - Rear Cover | 1 |
| 14 | SD-037-71 | Self-Tapping Screw 6-19 x 5/16 Phil. Pan Hd | 2 |
| 15 | 00-446929 | Spacer - Mounting (GCD) | 2 |
| 16 | SC-116-57 | Mach. Screw 8-32 x 7/8 Phil. Pan Hd | 2 |
| 17 | 00-446550 | Foot Assy | 4 |
| 18 | 00-446539 | Cable (USB A-STD Male to B-Micro Male) | 1 |
| *19 | 00-445967 | Compact Flash (Recovery - GCD, Scale) | 1 |
| *20 | 00-445968 | Micro SD (Recovery - GCD, Control Board) | 1 |
| 21 | 00-447518 | Kit - Bracket & Audio Cable | 1 |
| **22 | 00-447486 | Kit - Compact Flash Card Recovery | 1 |

* (GCD Recovery cards for version 3.3.89 or earlier.)
** (For version 6.1.35 and later.)