HOBART

CATALOG OF REPLACEMENT PARTS



MICROWAVE OVENS

HM1200 **ML-126824**

– NOTICE –

Please Destroy All Previous Versions of This Catalog.

A product of HOBART CORPORATION 701 S. RIDGE AVENUE TROY, OHIO 45374-0001

FORM 43019 Rev. A (February 2002)

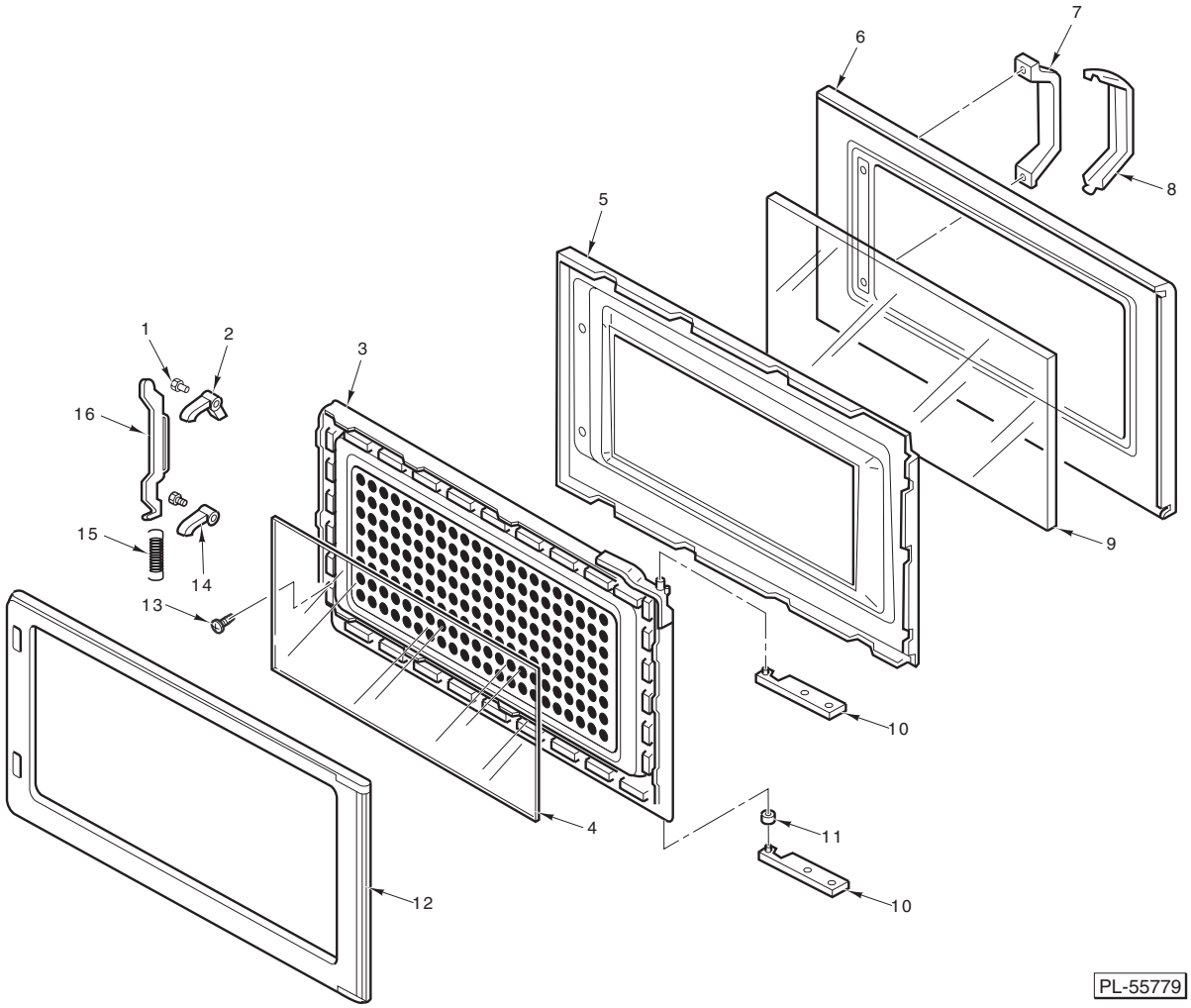

DOOR ASSEMBLY

ILLUS. PL-55779	PART NO.	NAME OF PART	AMT.
1	00-854360-00086	Pin – Handle	2
2	00-854360-00083	Key – Door	1
3	00-854360-00082	Door (E) (Incls. Item 4)	1
4	00-854360-00077	Screen – Door (A)	1
5	00-854360-00079	Frame – Door (U)	1
6	00-854360-00080	Door (A)	1
7	00-854360-00087	Handle – Piece (A)	1
8	00-854360-00090	Handle – Piece (B)	1
9	00-854360-00078	Screen – Door (B)	1
10	00-854360-00089	Hinge	2
11	00-360549	Spacer – Door Hinge	1
12	00-854360-00088	Door (C)	1
13	00-360841	Screw	2
14	00-854360-00084	Key – Door (B)	1
15	00-854360-00085	Spring – Door Key	1
16	00-854360-00081	Lever – Door Key (B)	1

 © HOBART CORPORATION

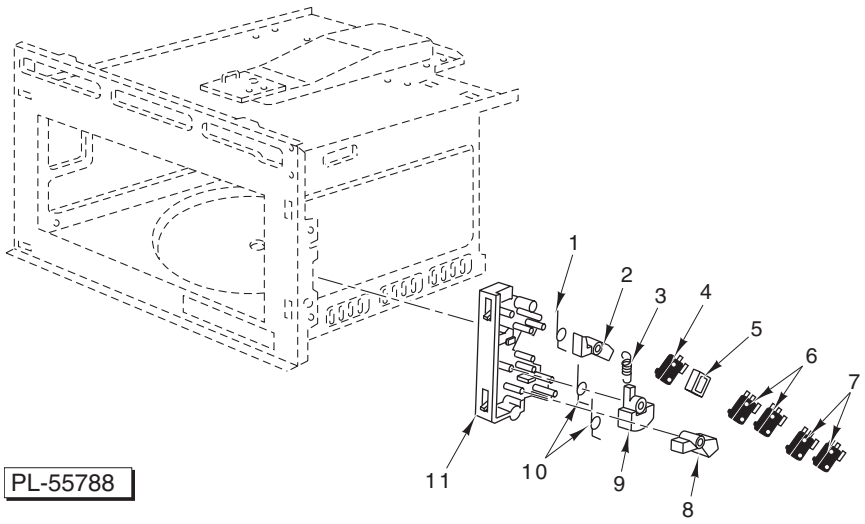

DOOR SWITCH

ILLUS. PL-55788	PART NO.	NAME OF PART	AMT.
1	00-854360-00036	Spring	1
2	00-854360-00032	Spacer – Hook (A)	1
3	00-854360-00035	Spring	1
4	00-854360-00054	Switch – Micro (Primary)	2
5	00-854360-00062	Spacer	1
6	00-854360-00056	Switch – Micro (Short)	1
7	00-360835-00029	Switch – Micro (Secondary)	1
8	00-854360-00033	Spacer – Hook (B)	1
9	00-854360-00034	Spacer – Hook (C)	1
10	00-854360-00036	Spring	1
11	00-854360-00031	Hook – Door (A)	1

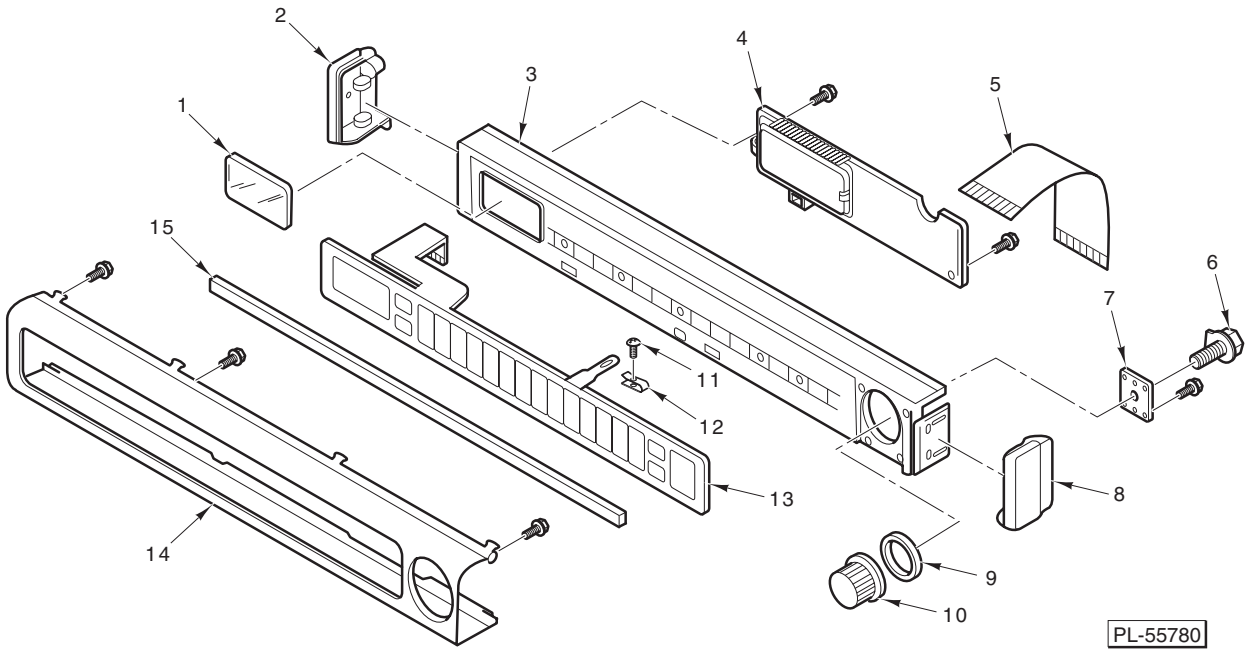

CONTROL PANEL

CONTROL PANEL

ILLUS. PL-55780	PART NO.	NAME OF PART	AMT.
1	00-854360-00100	Sheet – Escutcheon	1
2	00-854360-00096	Escutcheon (B)	1
3	00-854360-00098	Base – Escutcheon (Incls. Item 11)	1
4	00-854360-00092	PC Board (B)	1
5	00-854360-00094	Cable – Flat	1
6	00-854360-00101	Timer	1
7	00-854360-00102	Bracket – Timer	1
8	00-854360-00097	Escutcheon (D)	1
9	00-854360-00099	Spacer (A)	1
10	00-854360-00091	Knob – Timer	1
11	00-360840	Screw (Black)	1
12	00-360835-00095	Speed Nut	1
13	00-854360-00093	Membrane Switch	1
14	00-854360-00095	Escutcheon (A)	1
15	00-854360-00103	Spacer	1

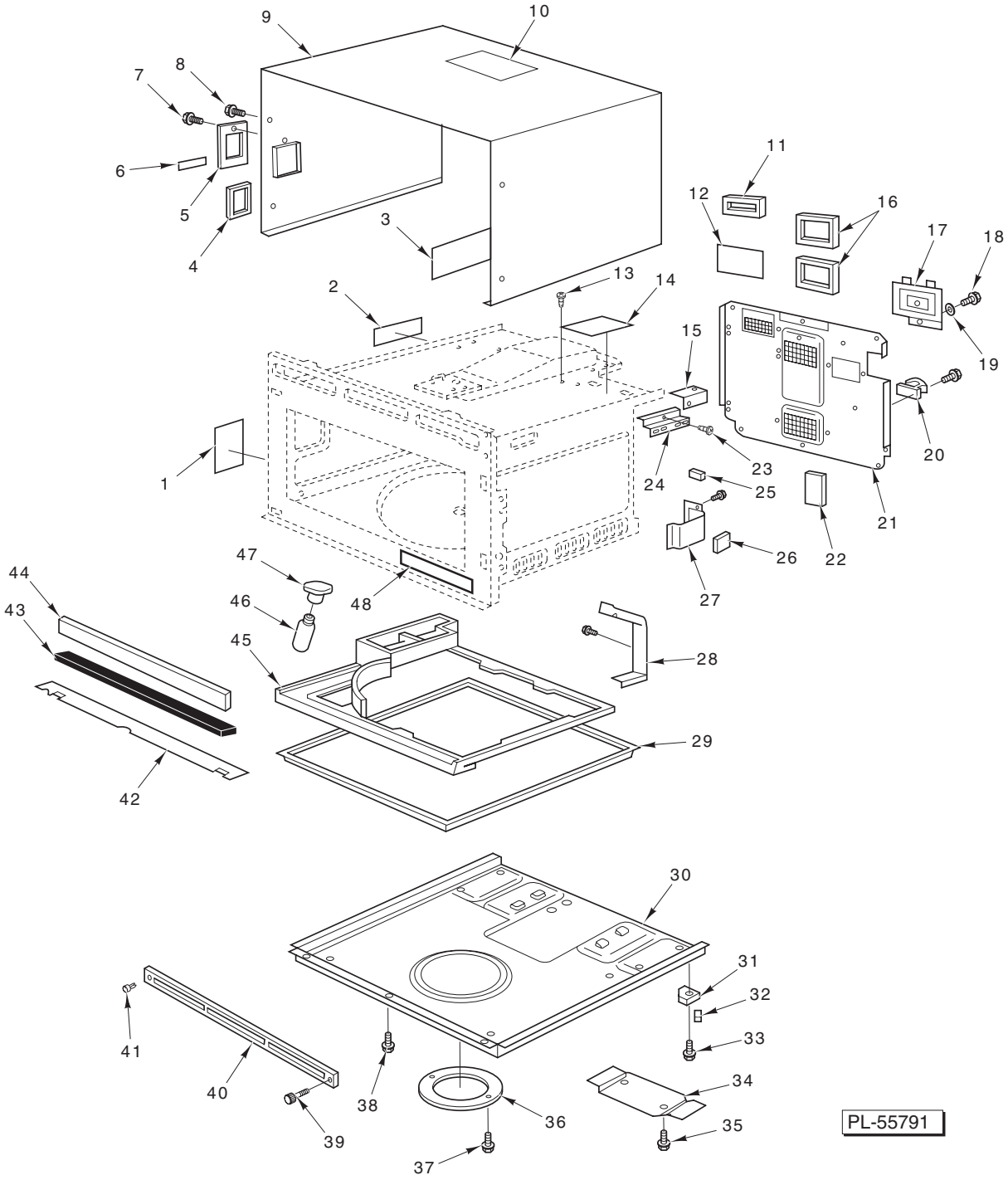
1
2
3
4
5
6
7
8
9
10
11
12
13
14
15
16
17
18
19
20
21
22
23
24
25
26
27
28
29
30
31
32
33
34
35
36
37
38
39
40
41
42
43
44
45
46
47
48
PL-55791

OVEN CAVITY

OVEN CAVITY

ILLUS. PL-55791	PART NO.	NAME OF PART	AMT.
1	00-854360-00047	Oven Lamp Sheet	1
2	00-854360-00048	Insulation Sheet (A)	1
3	00-854360-00050	Insulation Sheet (B)	1
4	00-854360-00011	Cushion – Rubber (C)	AR
5	00-854360-00018	Cover – Lamp	1
6	00-854360-00004	Label – Caution	1
7	00-360838	Screw	1
8	00-360838	Screw	4
9	00-854360-00017	Cabinet Body	1
10	00-854360-00006	Label – Caution	1
11	00-854360-00011	Cushion – Rubber (C)	AR
12	00-854360-00001	Label – Warning	1
13	00-360839	Screw	8
14	00-854360-00002	Label – Fuse	1
15	00-854360-00050	Insulation Sheet (B)	1
16	00-854360-00011	Cushion – Rubber (C)	AR
17	00-360835-00005	Cover – Back Panel	1
18	00-360840	Screw (Black)	1
19	00-854360-00063	Washer	1
20	00-854360-00023	Stopper	1
21	00-854360-00014	Panel – Back	1
22	00-854360-00029	Spacer	1
23	00-360840	Screw (Black)	AR
24	00-854360-00060	Bracket – Mounting	1
25	00-854360-00008	Cushion – Rubber (A)	1
26	00-854360-00020	Cushion – Rubber	1
27	00-854360-00073	Bracket	1
28	00-854360-00051	Bracket – Oven Lamp	1
29	00-854360-00005	Shelf	1
30	00-854360-00013	Base	1
31	00-854360-00015	Foot	4
32	00-854360-00016	Foot – Rubber	4
33	00-360840	Screw (Black)	AR
34	00-854360-00024	Base – Metal	1
35	00-360840	Screw (Black)	AR
36	00-854360-00019	Cover – Antenna Motor	1
37	00-360840	Screw (Black)	AR
38	00-360840	Screw (Black)	2
39	00-854360-00042	Screw	1
40	00-854360-00038	Air Filter Frame	1
41	00-360835-00013	Clip (Black)	1
42	00-854360-00021	Bracket – Base	1
43	00-854360-00025	Spacer	1
44	00-854360-00010	Spacer	1
45	00-854360-00026	Plate – Ceiling	1
46	00-854360-00046	Lamp – Incandescent	1
47	00-360835-00010	Socket	1
48	00-360835-00124	Label – DHHS	1

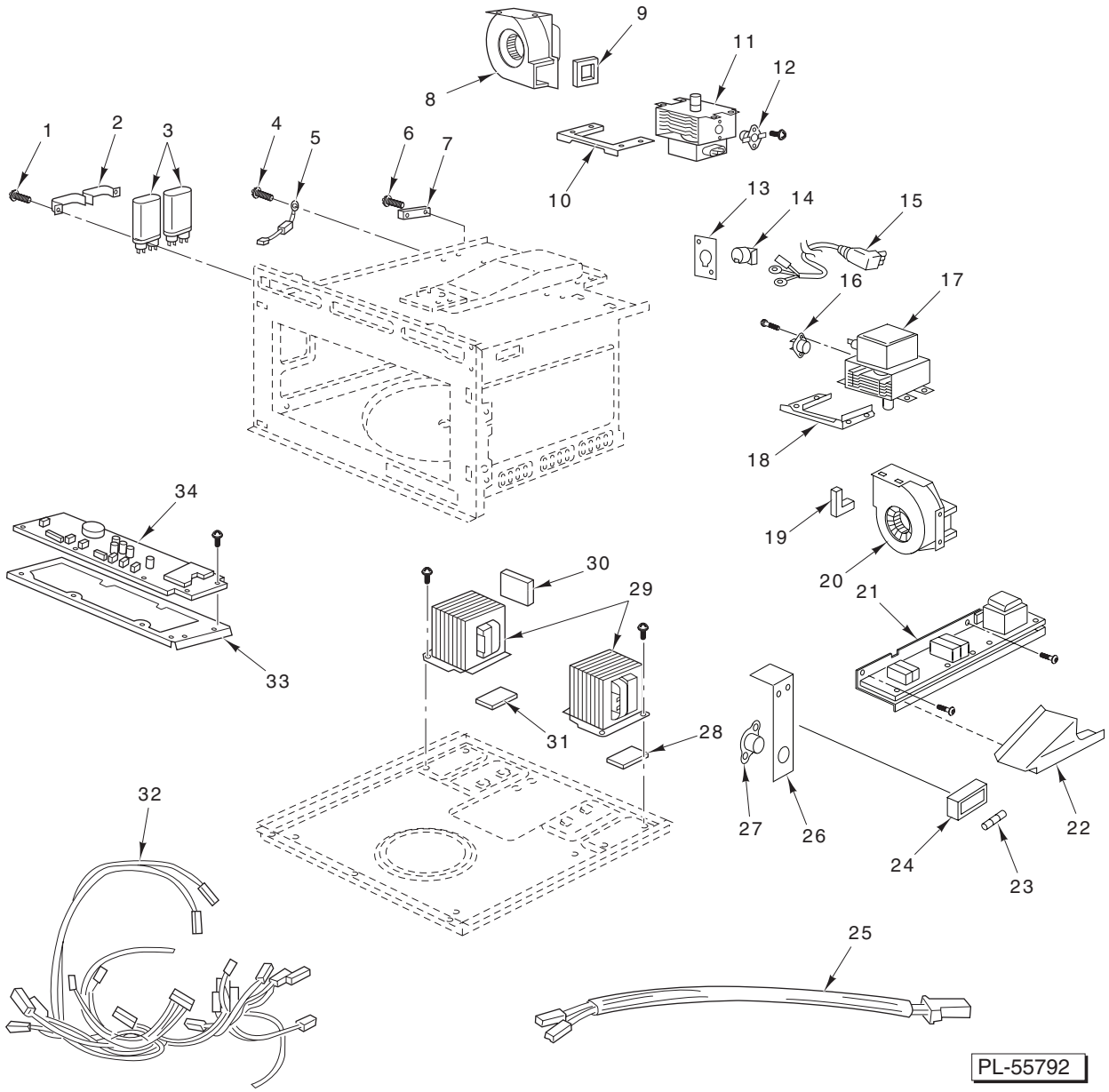

ELECTRICAL COMPONENTS

ELECTRICAL COMPONENTS

ILLUS. PL-55792	PART NO.	NAME OF PART	AMT.
1	00-360840	Screw (Black)	AR
2	00-854360-00057	Bracket – Capacitor	2
3	00-854360-00053	Capacitor (High Voltage)	2
4	00-360840	Screw (Black)	AR
5	00-854360-00058	Diode	2
6	00-854360-00109	Screw	2
7	00-854360-00076	Temperature Sensor	1
8	00-854360-00037	Motor – Fan	1
9	00-360835-00092	Cushion – Rubber (C)	1
10	00-854360-00044	Bracket – Magnetron	1
11	00-854360-00064	Magnetron	1
12	00-854360-00055	Thermal Cutout	1
13	00-854360-00071	Bracket – Cord	1
14	00-854360-00070	Bushing – Cord	1
15	00-854360-00069	Power Cord (With Plug)	1
16	00-854360-00055	Thermal Cutout	1
17	00-854360-00064	Magnetron	1
18	00-854360-00044	Bracket – Magnetron	1
19	00-360835-00003	Cushion – Rubber (C)	10
20	00-854360-00037	Motor – Fan	1
21	00-854360-00068	Transformer (Low Voltage)	1
22	00-854360-00067	PCB Cover	1
23	00-360509	Fuse	1
24	00-854360-00061	Holder – Fuse	1
25	00-854360-00105	Lead Wire	1
26	00-854360-00052	Thermal Cutout Mount	1
27	00-854360-00055	Thermal Cutout	1
28	00-854360-00022	Cushion – Rubber (B)	1
29	00-854360-00059	Transformer (High Voltage)	1
30	00-854360-00009	Cushion – Rubber (B)	1
31	00-854360-00022	Cushion – Rubber (B)	1
32	00-854360-00104	Lead Wire Harness	1
33	00-854360-00066	PCB Holder	1
34	00-854360-00045	Circuit (DP)	1

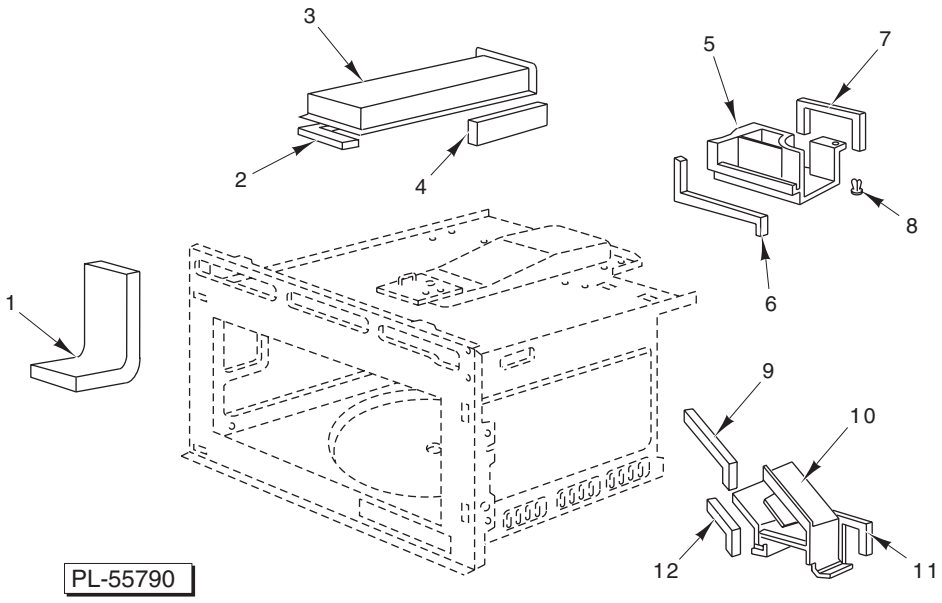

AIR DUCTS

AIR DUCTS

ILLUS. PL-55790	PART NO.	NAME OF PART	AMT.
1	00-854360-00043	Cushion – Air Guide (B)	1
2	00-854360-00012	Cushion – Rubber (D)	1
3	00-854360-00039	Guide – Exhaust (A)	1
4	00-360602	Cushion – Rubber (D)	1
5	00-854360-00040	Guide – Air (A)	1
6	00-360835-00003	Cushion – Rubber (C)	AR
7	00-360835-00003	Cushion – Rubber (C)	AR
8	00-854360-00074	Clip (B)	1
9	00-360835-00003	Cushion – Rubber (C)	AR
10	00-854360-00041	Guide – Air (B)	1
11	00-360835-00003	Cushion – Rubber (C)	AR
12	00-360835-00003	Cushion – Rubber (C)	AR

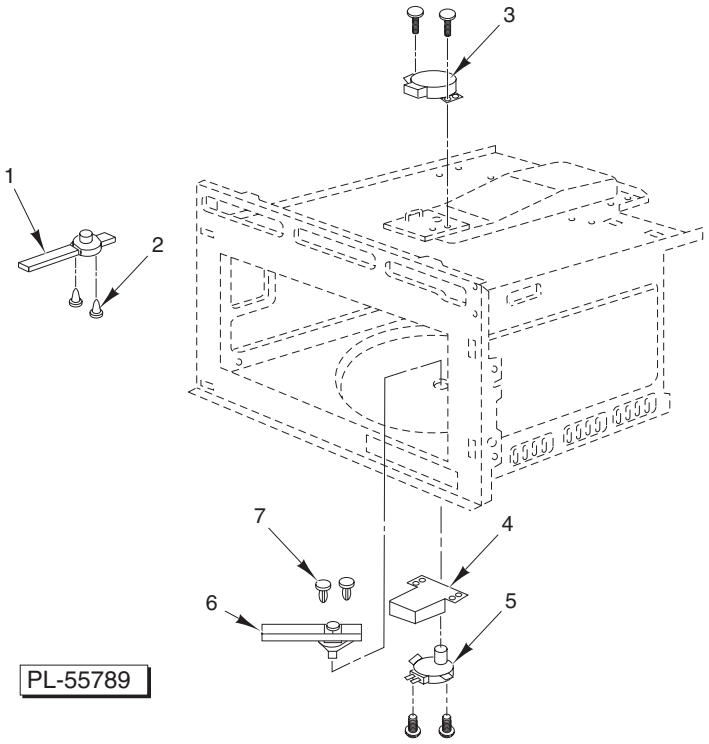

ANTENNA

ILLUS. PL-55789	PART NO.	NAME OF PART	AMT.
1	00-854360-00027	Antenna	1
2	00-854360-00063	Clip	AR
3	00-360835-00172	Motor – Antenna (2.5 W.)	1
4	00-854360-00075	Cover – Motor	1
5	00-360835-00171	Motor – Antenna (2.5 W.)	1
6	00-854360-00028	Antenna (B)	1
7	00-854360-00063	Clip	AR