HOBART

CATALOG OF REPLACEMENT PARTS



MICROWAVE OVENS

HM1600 **ML-114794**

A product of HOBART CORPORATION 701 S. RIDGE AVENUE TROY, OHIO 45374-0001

FORM 43000 (June 2001)

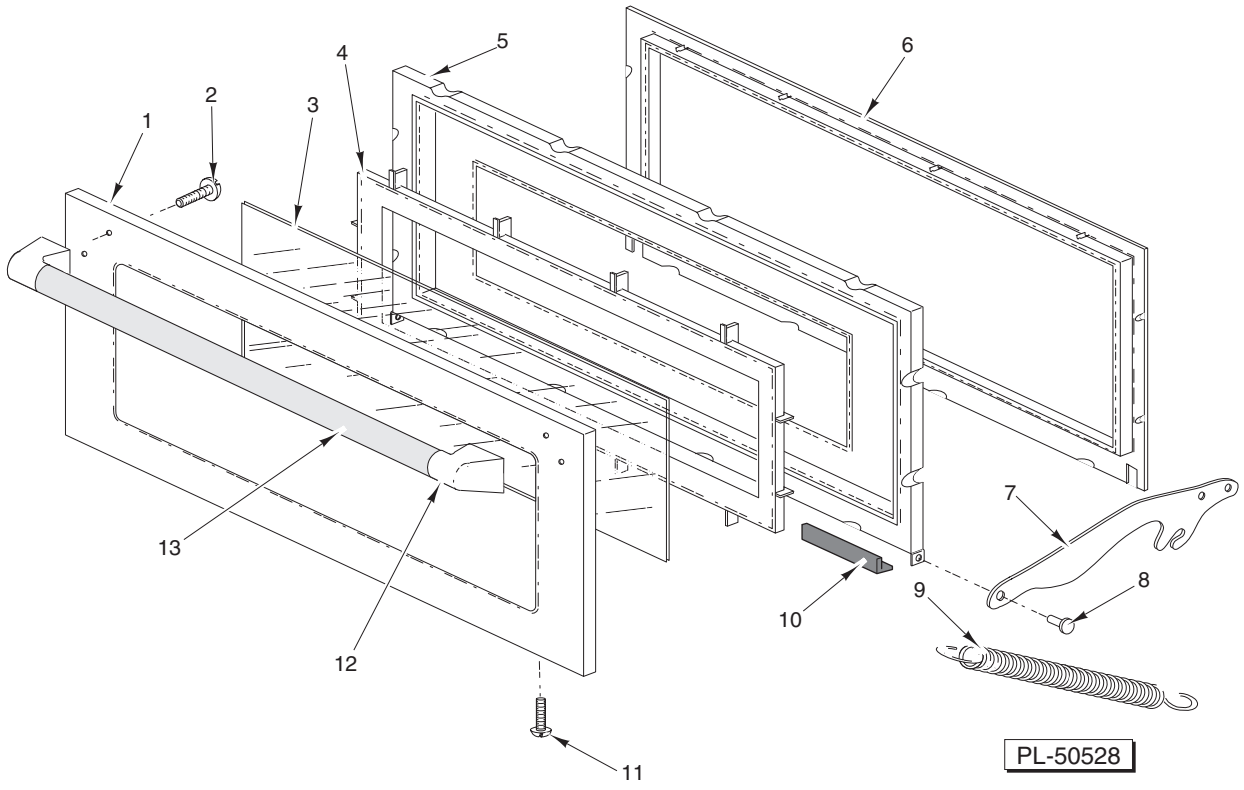

DOOR

ILLUS. PL-50528	PART NO.	NAME OF PART	AMT.
1	00-360835-00140	Door (A)	1
2	00-360841	Self-Tapping Screw – M4 x 16 mm	4
3	00-360835-00143	Screen – Door (B)	1
4	00-360835-00141	Frame – Window	1
5	00-360835-00142	Door (E)	1
6	00-360835-00145	Door (C)	1
7	00-360835-00148	Arm – Door	2
8	00-360835-00146	Pin – Door Arm	2
9	00-360835-00149	Spring – Door	2
10	00-360835-00039	Cushion – Rubber (B)	1
11	00-360838	Self-Tapping Screw – M4 x 10 mm	3
12	00-360835-00144	Handle – Piece (A) (Ends)	2
13	00-360835-00147	Handle – Piece (C)	1
	00-360837	Door Assy. (Incls. Items 1 thru 8 & Items 10 thru 13)	1

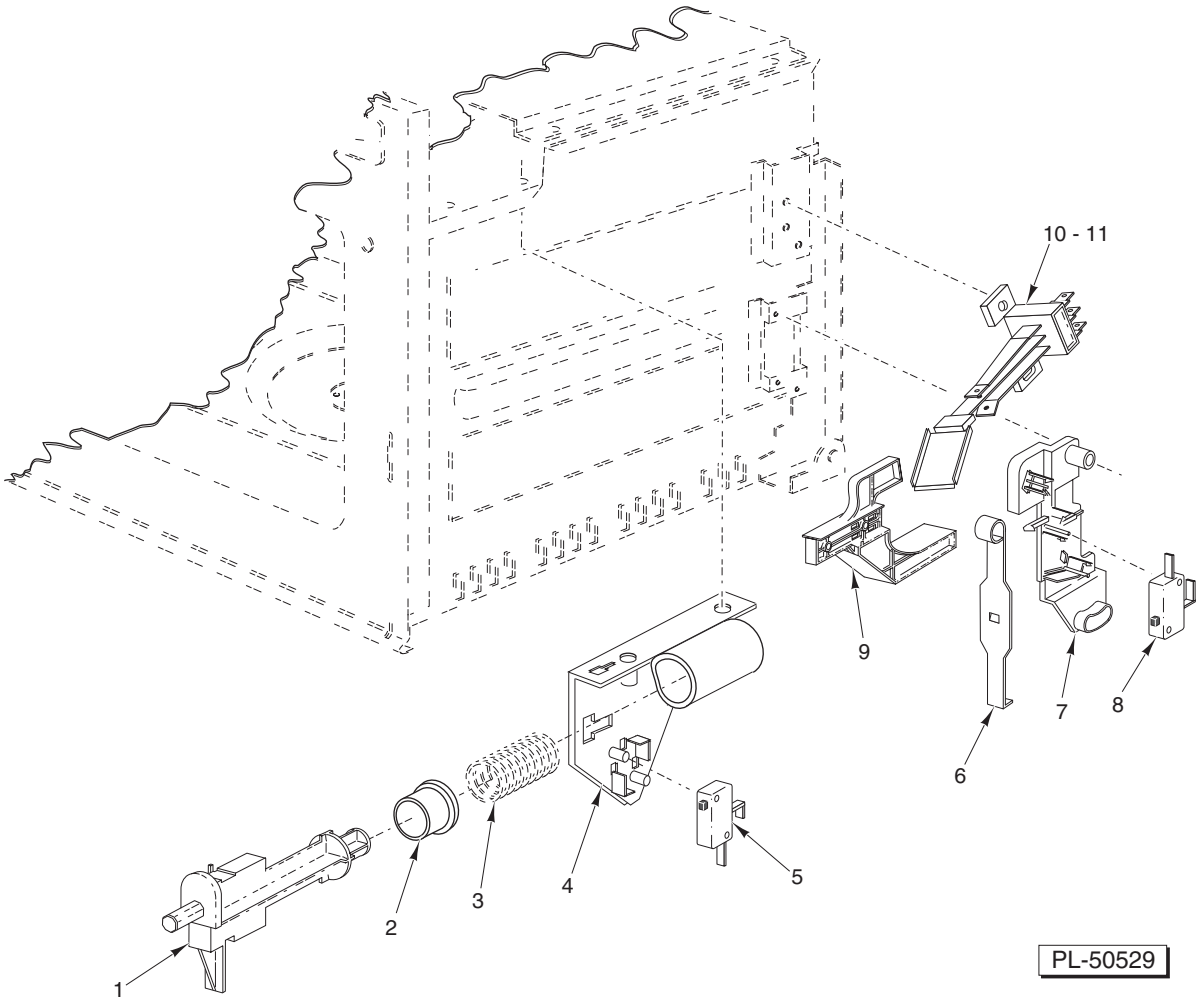

DOOR SWITCHES

ILLUS. PL-50529	PART NO.	NAME OF PART	AMT.
1	00-360835-00065	Key – Door (A)	2
2	00-360835-00087	Seal – Plunger	2
3	00-360835-00086	Spring – Door (Plunger)	2
4	00-360835-00030	Bracket – Door Switch (A)	2
5	00-360835-00029	Switch – Micro (Primary/Secondary)	2
6	00-360835-00069	Lever – Door Switch	2
7	00-360835-00016	Bracket – Door Switch (B)	2
8	00-360835-00029	Switch – Micro (Primary/Secondary)	2
9	00-360835-00091	Lever – Door Arm	2
10	00-360835-00082	Switch – Monitor (Door A)	1
11	00-360835-00083	Switch – Monitor (Door B)	1

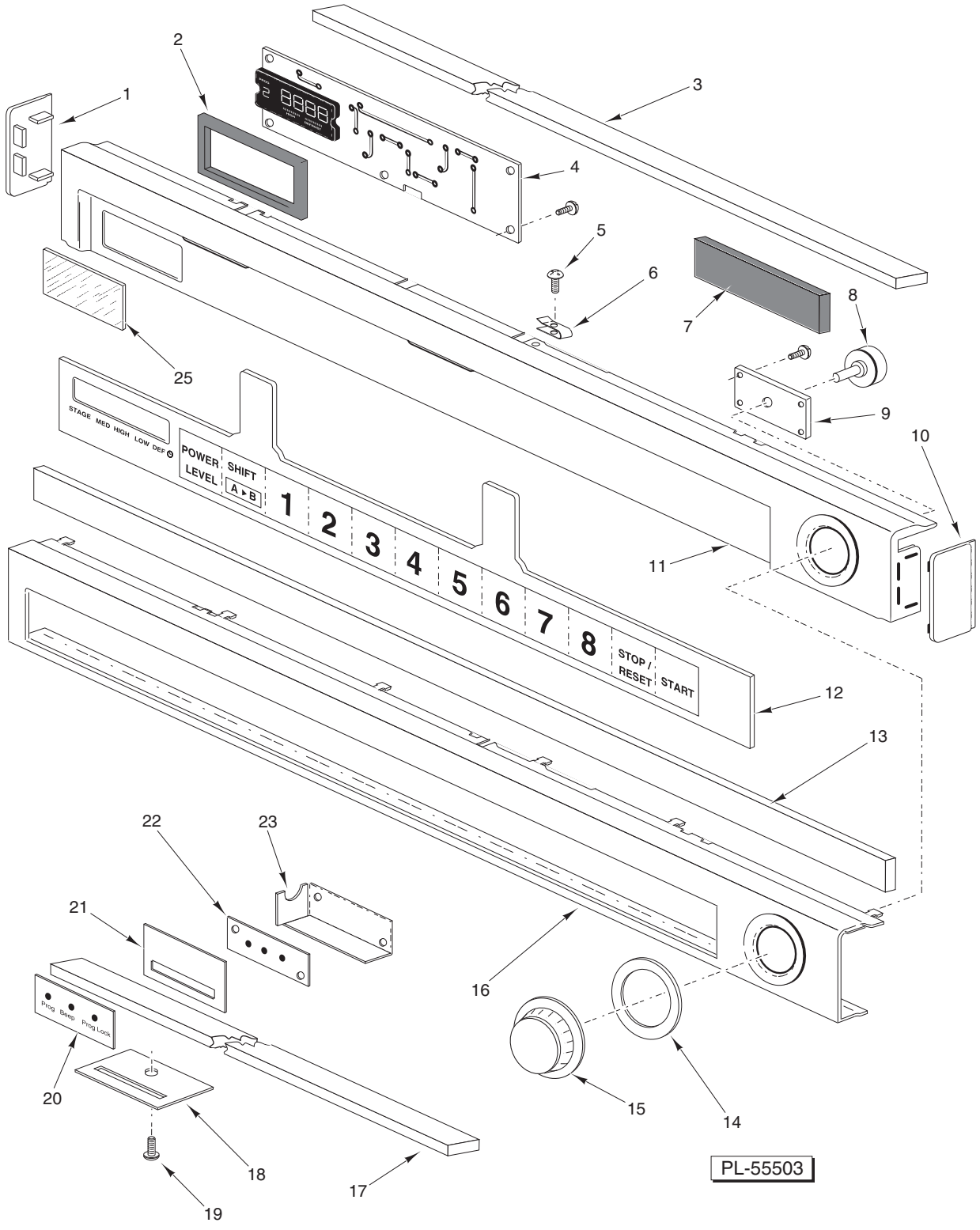

CONTROL PANEL

CONTROL PANEL

ILLUS. PL-55503	PART NO.	NAME OF PART	AMT.
1	00-360835-00102	Escutcheon (D)	1
2	00-360835-00104	Cushion – Rubber (B)	1
3	00-360835-00113	Spacer	1
4	00-360835-00180	Circuit – D.P.	1
5	00-360840	Self-Tapping Screw – M4 x 12 mm	AR
6	00-360835-00095	Speed Nut	1
7	00-360835-00122	Cushion – Rubber	1
8	00-360835-00107	Potentiometer – Timer	1
9	00-360835-00110	Bracket – Potentiometer	1
10	00-360835-00108	Escutcheon (B)	1
11	00-360835-00111	Escutcheon Base	1
12	00-360831	Switch – Membrane	1
13	00-360835-00103	Spacer – Escutcheon	1
14	00-360835-00112	Spacer	1
15	00-360835-00123	Knob – Timer	1
16	00-360835-00106	Escutcheon (A)	1
17	00-360835-00099	Spacer – Escutcheon	1
18	00-360835-00074	Holder – Switch	1
19	00-360840	Self-Tapping Screw – M4 x 12 mm	1
20	00-360835-00078	Panel – Touch (B) W/Adhesive	1
21	00-360835-00101	Spacer – Switch	1
22	00-360835-00072	Board – Program Switch (F)	1
23	00-360835-00085	Case	1
24	00-360835-00105	Panel – Smoke Display	1

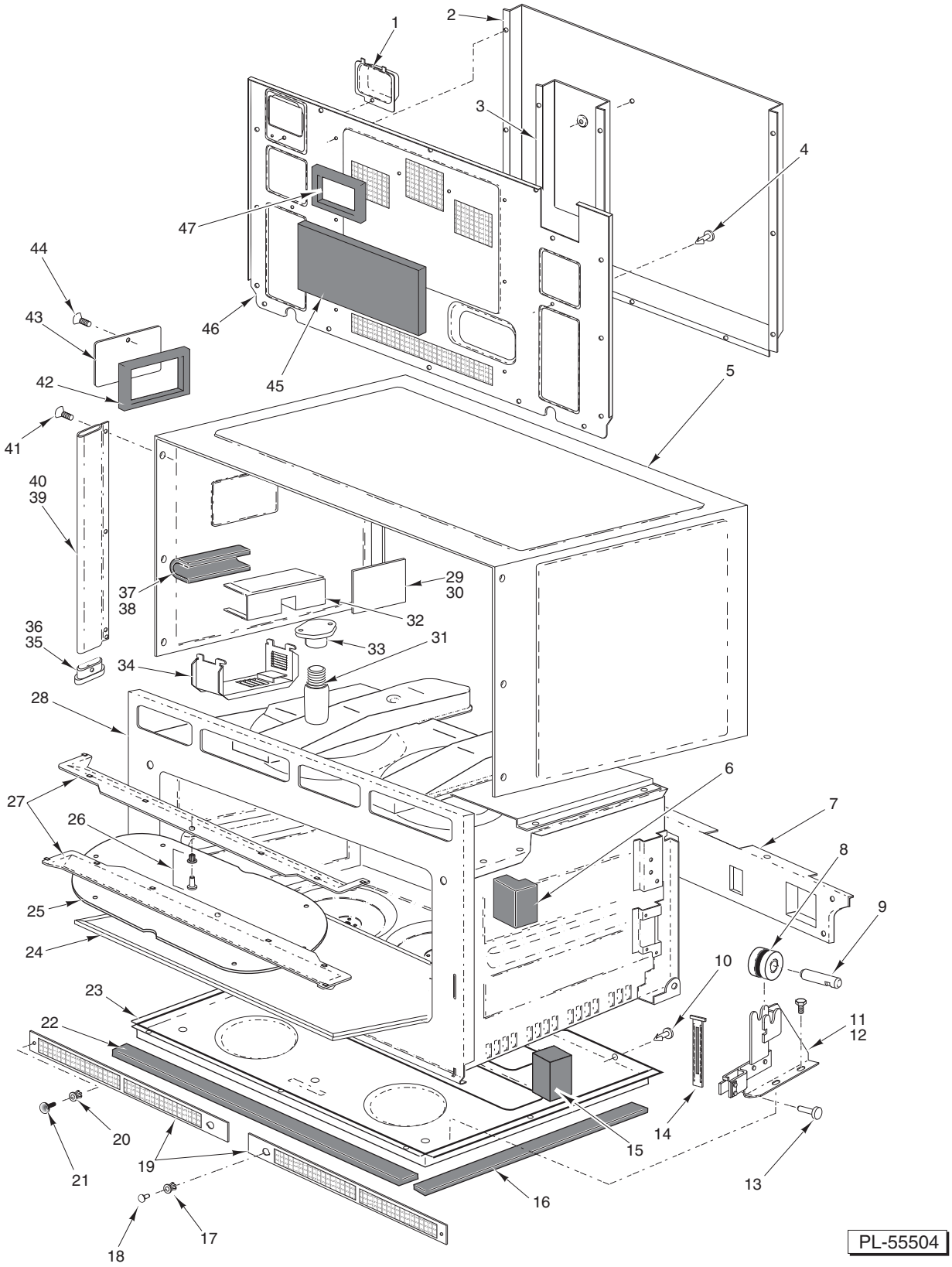
1
2
3
4
47
44
43
46
45
42
5
41
40
39
37
38
29
30
32
36
35
33
31
34
28
6
7
27
26
8
9
25
24
10
23
11
12
22
20
14
15
21
19
13
16
18
17
PL-55504

OVEN CAVITY

OVEN CAVITY

ILLUS. PL-55504	PART NO.	NAME OF PART	AMT.
1	00-360835-00005	Cover – Back Panel	1
2	00-360835-00066	Cover – Back Panel (A)	1
3	00-360835-00067	Cover – Back Panel (B)	1
4	00-360835-00093	Clip	2
5	00-360835-00021	Wrap – Cabinet Body	1
6	00-360835-00024	Cushion – Rubber (C)	2
7	00-360835-00061	Bracket (B)	1
8	00-360835-00070	Roller – Door Guide	2
9	00-360835-00071	Pin – Door Roller	2
10	00-360835-00093	Clip	1
11	00-360835-00056	Bracket – Roller (A) RH	1
12	00-360835-00057	Bracket – Roller (B) LH	2
13	00-360835-00068	Pin – Hinge	2
14	00-360835-00090	Spacer – Door Arm	2
15	00-360835-00092	Cushion – Rubber (C)	2
16	00-360835-00018	Gasket – Rubber	2
17	00-360835-00077	Spacer	2
18	00-360835-00013	Clip – Poly	2
19	00-360835-00031	Filter – Air Frame	2
20	00-360835-00032	Handle – Filter (B)	2
21	00-360835-00033	Handle – Filter	2
22	00-360835-00019	Gasket – Rubber (B)	2
23	00-360835-00017	Base	1
24	00-360835-00015	Shelf Bottom	1
25	00-360835-00027	Plate – Ceiling	1
26	00-360835-00014	Clip – Poly	8
27	00-360835-00026	Plate – Ceiling (B)	2
28	00-360835-00163	Cavity – Oven	1
29	00-360835-00153	Sheet – Oven Lamp (Outside)	1
30	00-360835-00094	Sheet – Oven Lamp (Inside)	1
31	00-360835-00007	Lamp – Incandescent (20 W., 240 V.)	2
32	00-360835-00062	Bracket – Oven Lamp	1
33	00-360835-00010	Socket – Oven Lamp	2
34	00-360835-00042	Cover – Oven Light	1
35	00-360835-00054	Sash – Rubber (B)	1
36	00-360835-00055	Sash – Rubber (A)	1
37	00-360835-00114	Cushion – Rubber (A)	1
38	00-360835-00097	Cushion – Rubber (B)	1
39	00-360835-00052	Sash – Left Side	1
40	00-360835-00053	Sash – Right Side	1
41	00-360838	Self-Tapping Screw – M4 x 10 mm	6
42	00-360835-00003	Cushion – Rubber (C)	1
43	00-360835-00022	Cover – Lamp Access	1
44	00-360838	Self-Tapping Screw – M4 x 10 mm	1
45	00-360835-00080	Insulating Sheet	1
46	00-360835-00161	Panel – Back	1
47	00-360835-00092	Cushion – Rubber (C)	2
	00-360835-00155	Shelf Middle (Not Shown)	1

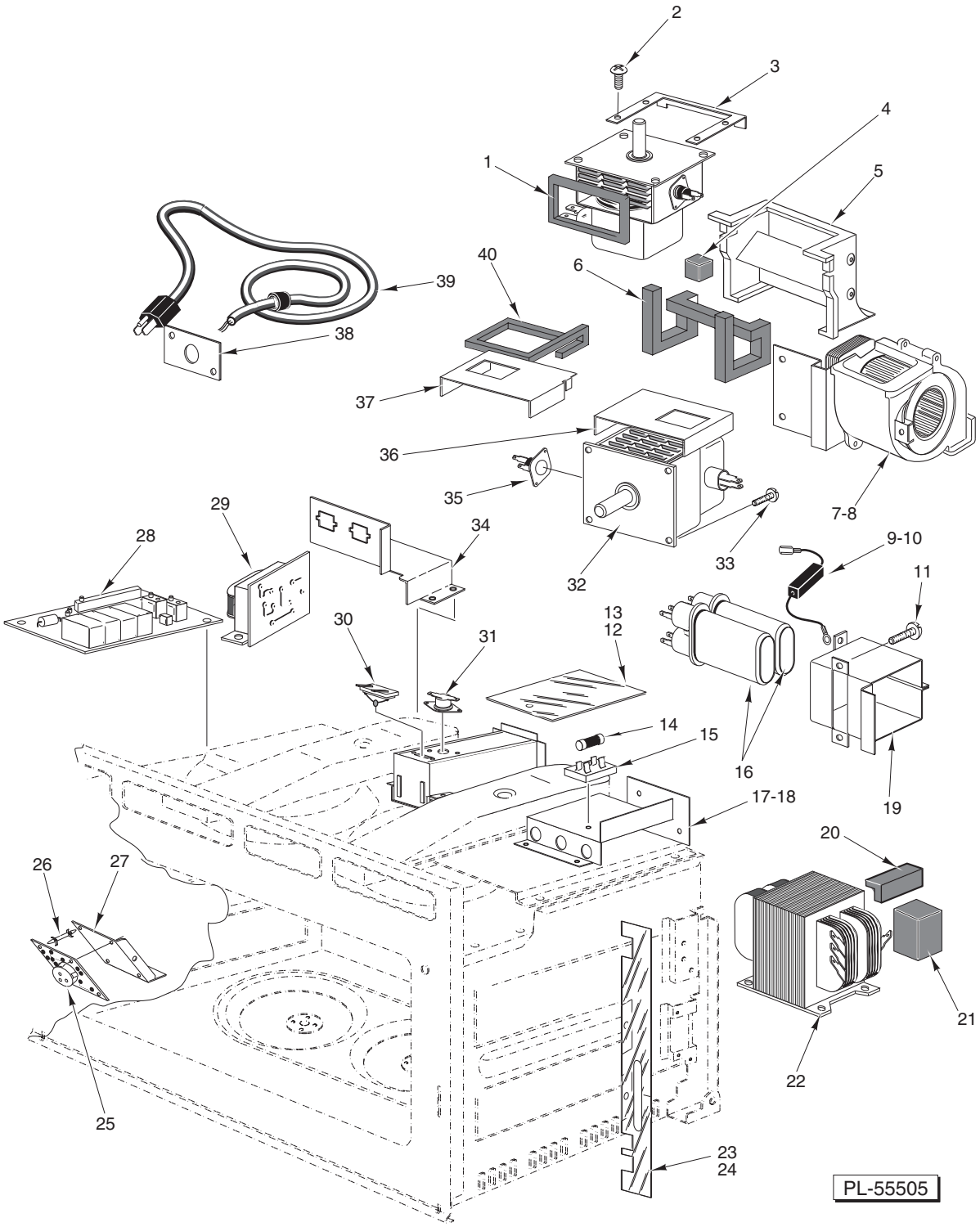

ELECTRICAL COMPONENTS

ELECTRICAL COMPONENTS

ILLUS. PL-55505	PART NO.	NAME OF PART	AMT.
1	00-360835-00003	Cushion – Rubber (C)	2
2	00-360839	Mach. Screw – M5 x 16 mm	8
3	00-360835-00006	Bracket – Magnetron	2
4	00-360835-00004	Cushion – Rubber (C)	2
5	00-360835-00036	Guide – Air (A)	2
6	00-360835-00092	Cushion – Rubber (C)	2
7	00-360835-00064	Motor – Fan (B) (208-240 V., 60 Hz., 1 Ph.)	1
8	00-360835-00048	Motor – Fan (208-240 V., 60 Hz., 1 Ph.) (Shown)	1
9	00-360835-00045	Diode – High Voltage	4
10	00-360840	Self-Tapping Screw – M4 x 12 mm	4
11	00-360840	Self-Tapping Screw – M4 x 12 mm	AR
12	00-360835-00058	Barrier – Sheet (A)	1
13	00-360835-00098	Clip – Poly	1
14	00-360835-00046	Fuse (20 Amp., 250 V.)	1
15	00-360835-00011	Holder – Fuse	1
16	00-360835-00043	Capacitor – High Voltage	4
17	00-360835-00081	Plate – Terminal	1
18	00-360840	Self-Tapping Screw – M4 x 12 mm	2
19	00-360835-00041	Bracket – Capacitor (High Voltage)	2
20	00-360835-00088	Cushion – Rubber (B)	2
21	00-360835-00089	Cushion – Rubber(B)	2
22	00-360835-00167	Transformer – High Voltage	1
23	00-360835-00059	Barrier – Sheet (C)	1
24	00-360835-00098	Clip – Poly	1
25	00-360835-00073	Board – Buzzer (H)	1
26	00-360835-00012	Spacer (A)	4
27	00-360835-00084	Bracket – Buzzer Mounting	1
28	00-360835-00168	Board – Low Power Circuit	1
29	00-360835-00169	Board – Low-Voltage Transformer Circuit	2
30	00-360835-00096	Sensor – Temperature	1
31	00-360835-00063	Thermal Cutout	2
32	00-360835-00178	Magnetron	4
33	00-360842	Mach. Screw – M4 x 10 mm	8
34	00-360835-00076	Bracket	1
35	00-360835-00174	Cutout – Magnetron Thermal	4
36	00-360835-00037	Guide – Air (B)	1
37	00-360835-00038	Guide – Air (C)	1
38	00-360835-00115	Bracket	1
39	00-360836	Cord & Plug Assy. (Incls. Bushing)	1
40	00-360835-00003	Cushion – Rubber (C)	2
	00-360835-00186	Harness W/Temp. Sensor	1
	00-360835-00134	Varistor Assy.	1
	00-360835-00150	Varistor Assy.	1

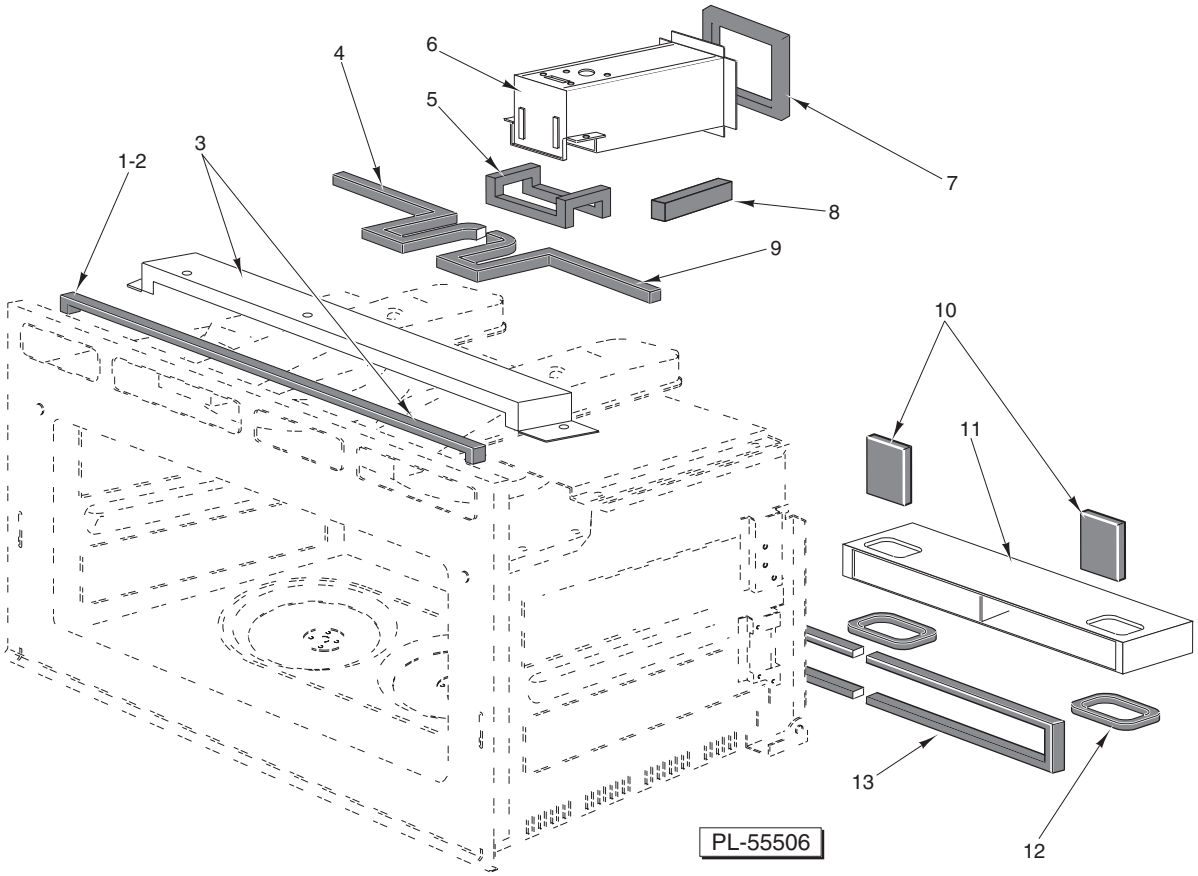

AIR DUCTS

AIR DUCTS

ILLUS. PL-55506	PART NO.	NAME OF PART	AMT.
1	00-360835-00003	Cushion – Rubber (C)	1
2	00-360835-00003	Cushion – Rubber (C)	1
3	00-360835-00166	Guide – Air (E)	1
4	00-360835-00003	Cushion – Rubber (C)	1
5	00-360835-00003	Cushion – Rubber (C)	1
6	00-360835-00079	Guide – Exhaust	1
7	00-360835-00003	Cushion – Rubber (C)	1
8	00-360835-00060	Cushion – Rubber (C)	1
9	00-360835-00003	Cushion – Rubber (C)	2
10	00-360835-00047	Cushion – Rubber	2
11	00-360835-00035	Guide – Exhaust (A)	1
12	00-360835-00003	Cushion – Rubber (C)	2
13	00-360835-00003	Cushion – Rubber (C)	2

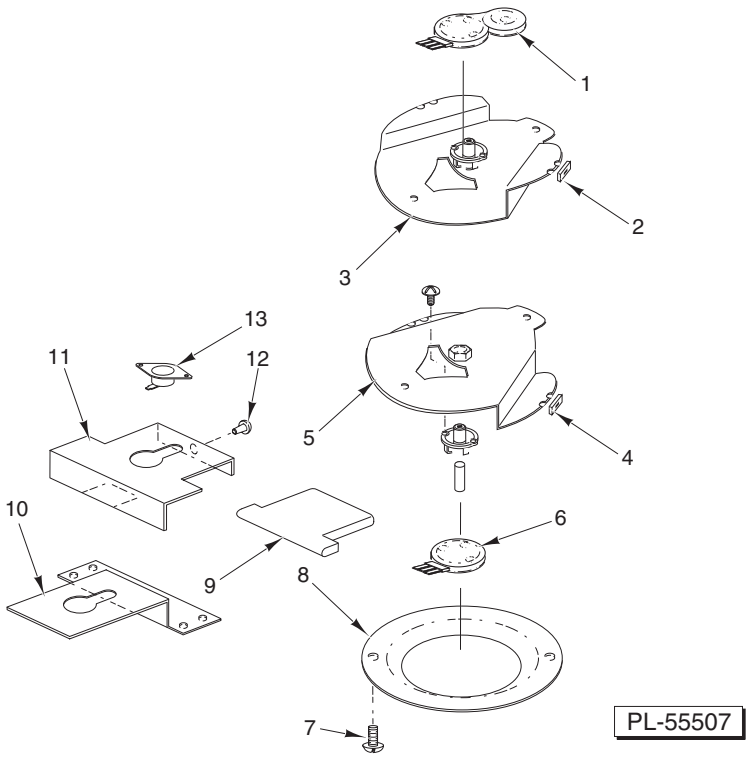

ANTENNA

ILLUS. PL-55507	PART NO.	NAME OF PART	AMT.
1	00-360835-00172	Motor – Upper Antenna	2
2	00-360835-00002	Stopper – Stirrer	4
3	00-360835-00164	Antenna – Moving	2
4	00-360835-00002	Stopper – Stirrer	4
5	00-360835-00164	Antenna – Moving	2
6	00-360835-00171	Motor – Lower Antenna	2
7	00-360840	Self-Tapping Screw – M4 x 12 mm	4
8	00-360835-00023	Cover – Antenna Motor	2
9	00-360835-00100	Cover – Lower Antenna Motor	2
10	00-360835-00151	Bracket – Thermo Cutout	2
11	00-360835-00152	Guide – Air (F)	2
12	00-360835-00098	Clip – Poly	2
13	00-360835-00173	Cutout – Thermal	2