CATALOG OF REPLACEMENT PARTS



REVOLVING TRAY OVENS

ML-132258	HO851G-36
ML-132259	HO851G-30
ML-132260	HO851G-24
ML-132261	HO851G-18

A product of BAXTER MFG. CO., INC. 19220 STATE ROUTE 162 EAST, ORTING, WA 98360

FORM 43052 Rev. F (August 2023)

 © BAXTER MFG. 2023

Table of Contents

5 STANDARD DIGITAL CONTROL PANEL
7 ADVANCED DIGITAL CONTROL PANEL
9 CONTROL MODULE AND SERVICE ENTRANCE
11 CABINET ASSEMBLY
13 HOOD
15 LOADING AND SERVICE DOOR
17 MAIN DRIVE ASSEMBLY
21 MAIN DRIVE MOTOR ASSEMBLY
23 PURGE KIT
25 GAS SUPPLY ASSEMBLY
27 BURNER ASSEMBLY

17	01-1M7149-00001	Kit - Control Door (W/O Autostart)
18	01-1M7150-00001	Kit - Control Door (W/ Autostart)
19	01-1M3121-00001	Thermocouple
20	01-1M3076-00001	Harness - Wire (Main)
21	01-1M2972-00063	Plug - Identity

PARTS NOT ILLUSTRATED

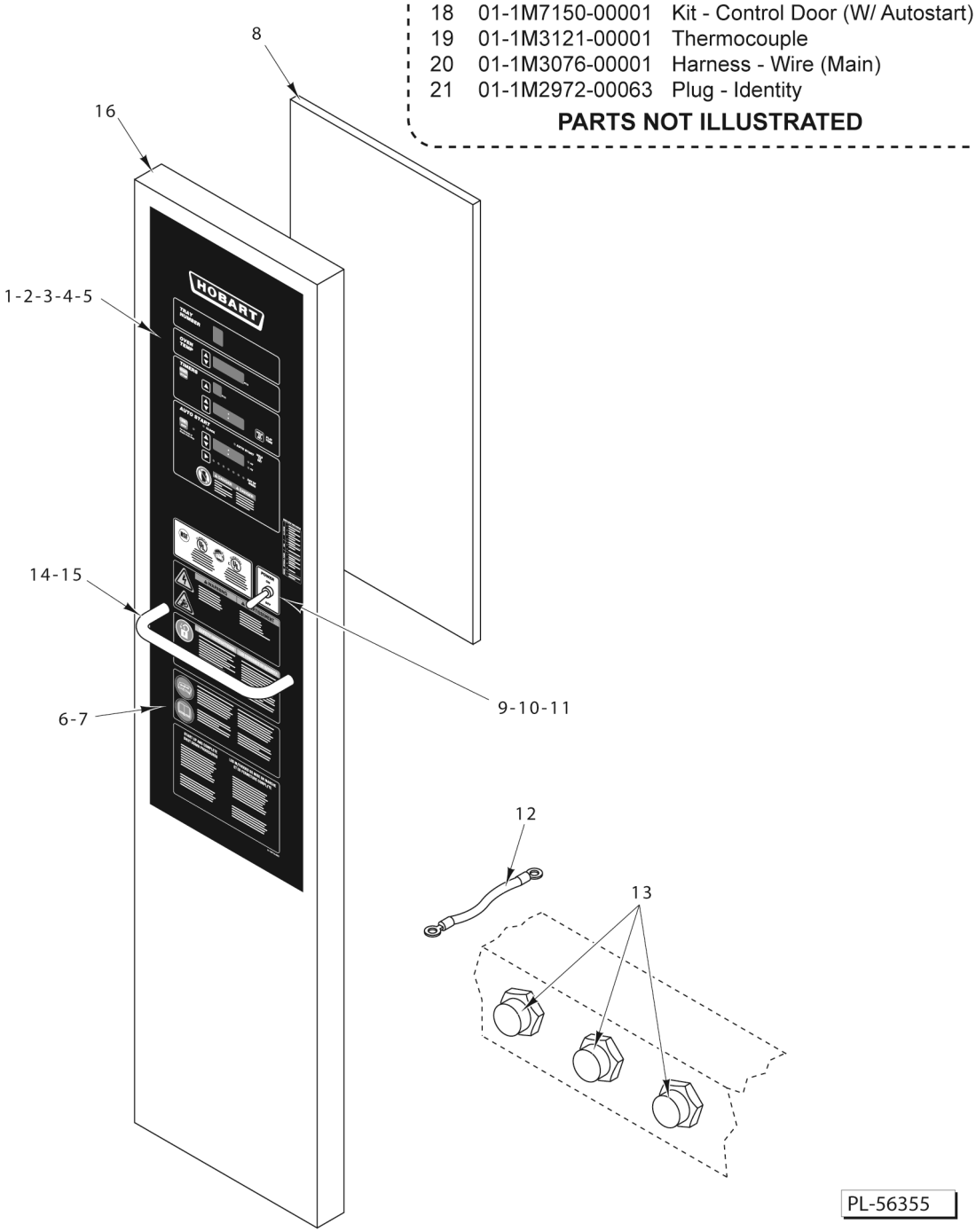

STANDARD DIGITAL CONTROL PANEL

STANDARD DIGITAL CONTROL PANEL

ILLUS. PL-56355	PART NO.	NAME OF PART	AMT.
1	01-100V16-0676C	Label - Control Panel (Upper) (W/O Autostart)	1
2	01-100V16-0676D	Label - Control Panel (Upper) (W/Autostart)	1
3	01-1M3109-00001	Control Board (W/O Autostart)	1
4	01-1M3109-00002	Control Board (W/Autostart)	1
5	01-1M3001-00002	Spacer - PC Board	12
6	01-100V16-0676E	Label (Instructions) (Lower) (English/Spanish)	1
7	01-100V16-0676F	Label (Instructions) (Lower) (English/French)	1
8	01-1M3083-00001	Cover - PC Control Board	1
9	01-1000V4-00019	Boot - Toggle Switch Seal	1
10	01-1M2283-00001	Guard - Toggle Switch	1
11	01-1000V6-0035J	Switch - Toggle	1
12	01-1M2777-00001	Strap - Ground	1
13	01-1000V6-00048	Button - Push (Green)	3
14	01-1M3010-00001	Handle - Door (Before S/N 241046490)	1
15	01-100V18-00174	Handle (Starting S/N 241046490)	1
16	01-1M3074-00002	Door Weldment	1
*17	01-1M7149-00001	Kit - Control Door (W/O Autostart) (Upgrades to Advanced) (For Use Only on Ovens Produced after Oct 1, 1998)	1
*18	01-1M7150-00001	Kit - Control Door (W/ Autostart) (Upgrades to Advanced) (For Use Only on Ovens Produced after Oct 1, 1998)	1
19	01-1M3121-00001	Kit - Thermocouple	1
20	01-1M3076-00001	Harness - Wire (Main)	1
21	01-1M2972-00063	Plug - Identity	1

* Control boards will not work on units having High/Low burners (including Philly Soft Pretzel units).

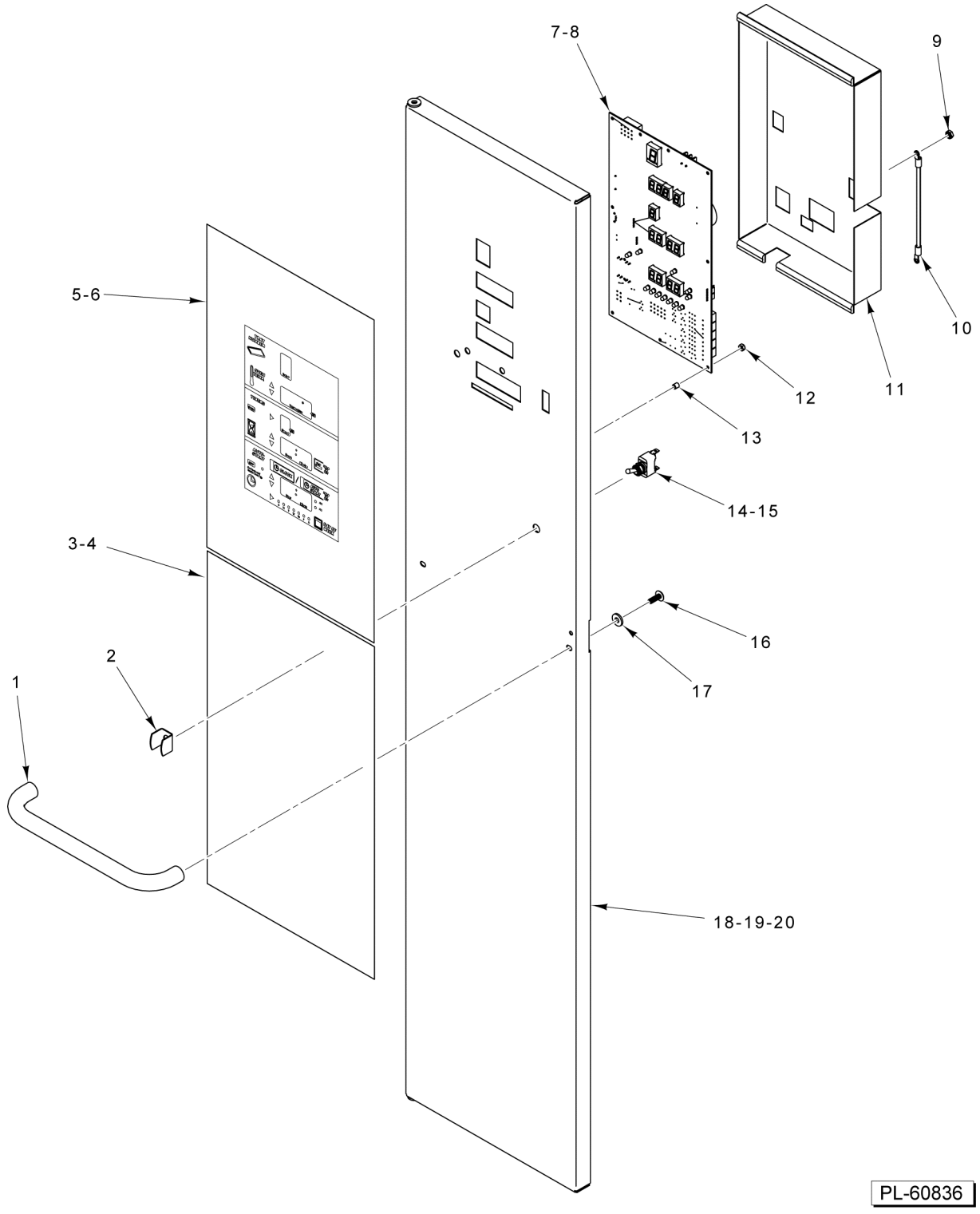

ADVANCED DIGITAL CONTROL PANEL

ADVANCED DIGITAL CONTROL PANEL

ILLUS. PL-60836	PART NO.	NAME OF PART	AMT.
1	01-100V18-00174	Handle	1
2	01-1M2283-00001	Guard - Toggle Switch	1
3	01-100V16-0676E	Label (Instructions) (Lower) (English/Spanish)	1
4	01-100V16-0676F	Label (Instructions) (Lower) (English/French)	1
5	01-100V16-0947A	Label - Control Panel (Upper) (W/O Autostart)	1
6	01-100V16-0947B	Label - Control Panel (Upper) (W/ Autostart)	1
7	01-100V16-00988	Board - Control (Incls. Item 8)	1
8	01-100V11-00239	Harness - Wire (Adapter)	1
9	01-1000V4-00445	Nut	4
10	01-1M7130-00001	Strap - Ground	1
11	01-1M7113-00001	Cover - Control Board	1
12	01-1000V4-00444	Nut	9
13	01-1000V5-00346	Spacer - PCB (1/4 O.D. x 1/4 Lg.) (Alum.)	9
14	01-1000V4-00019	Boot - Toggle Switch Seal	1
15	01-1000V6-0035F	Switch - Toggle (10 Amp.)	1
16	01-1000V4-00432	Mach. Screw 1/4-20 x 3/4 Phil. Pan Hd	2
17	01-1000V4-00433	Washer 1/4 In. (SST)	2
18	01-1M7112-00001	Door - Control (Weldment)	1
*19	01-1M7149-00001	Kit - Control Door (W/O Autostart) (Incls. Items 1 thru 5 & 7 thru 18) (For Use Only on Ovens Produced after Oct 1, 1998)	1
*20	01-1M7150-00001	Kit - Control Door (W/ Autostart) (Incls. Items 1 thru 4 & 6 thru 18) (For Use Only on Ovens Produced after Oct 1, 1998)	1

* Control boards will not work on units having High/Low burners (including Philly Soft Pretzel units).

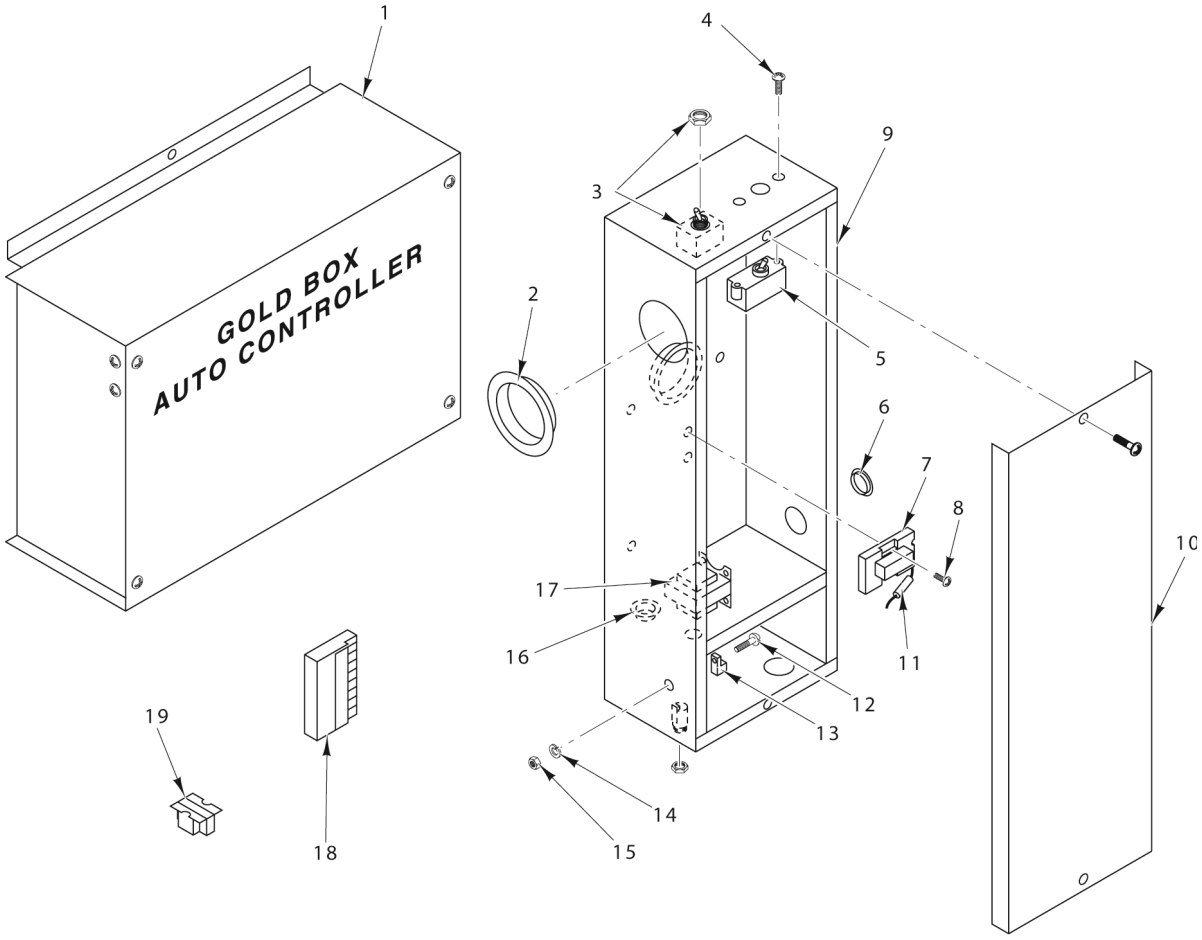

33 01-10M789-00001 Box - Service Entrance

PART NOT ILLUSTRATED

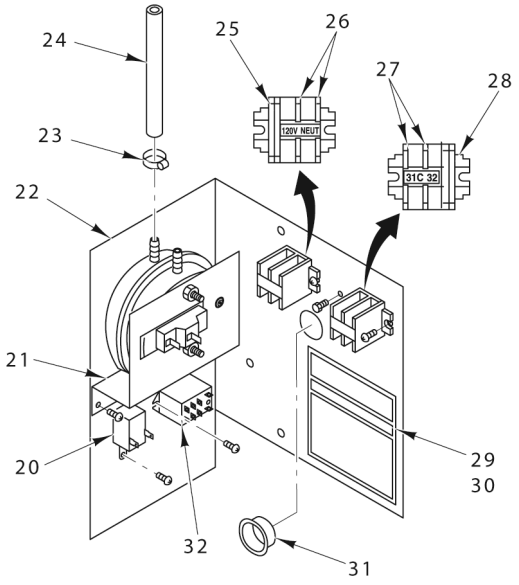

PL-56566

CONTROL MODULE AND SERVICE ENTRANCE

CONTROL MODULE AND SERVICE ENTRANCE

ILLUS. PL-56566	PART NO.	NAME OF PART	AMT.
1	01-10M800-00001	Control - Unit	1
2	01-1000V5-00033	Bushing - Snap (2 In.)	2
3	01-1000V6-00045	Switch - Toggle 3PDT	1
4		Mach. Screw 6-32 x 1/4 Pan Hd	2
5	01-1000V6-00052	Breaker - Circuit (3 Amp.)	1
6	01-100V15-00044	Cap - Finish (1 In.)	1
7	01-1000V6-00004	Relay DPDT (W/Auxillary Spot Connector)	2
8		Mach. Screw 10-32 x 1/4 Pan Hd	4
9	01-10M789-00001	Junction Box Assy. (Incls. Item 10)	1
10	01-10M793-00001	Cover - Service	1
11	01-100V23-00R36	Resistor (25 Ohms)	1
12		Mach. Screw 1/4-20 x 1/2 Pan Hd	1
13	01-1000V5-00037	Lug - Terminal	1
14		Lockwasher 1/4 Internal Star	1
15		Nut 1/4-20 Hex	1
16	01-1000V5-00059	Bushing - Snap (Plastic)	1
17	01-100V10-00061	Transformer (120 V., 50/60 Hz.)	1
18	01-1A1715-00001	Kit - Ignition Control	1
19	01-100V10-00061	Transformer (120 V., 50/60 Hz.)	1
20	01-100V10-00034	Buzzer (Mini-120 VAC)	1
21	01-1M2824-00003	Switch - Pressure	1
22	01-1M3017-00001	Plate - Service Entrance	1
23	01-1000V1-00018	Clamp - Hose 1/4 I.D. x 7/16 O.D.	4
24	01-1A1023-00425	Tube - Black (Neoprene) (1/4 I.D. x 4.25 In.)	2
25	01-1000V5-00106	End - Section	1
26	01-1000V5-00105	Terminal - Section	2
27	01-1000V5-00105	Terminal - Section	2
28	01-1000V5-00106	End - Section	1
29	01-100V16-00356	Label - Service Entrance (120 V.)	1
30	01-100V16-0356B	Label - Service Entrance (220 V.)	1
31	01-1000V5-00059	Bushing - Snap (Plastic)	1
32	01-1000V6-00070	Relay - D.P.D.T. (1/2 Hp., 120 VAC)	1
33	01-10M789-00001	Box - Service Entrance	1

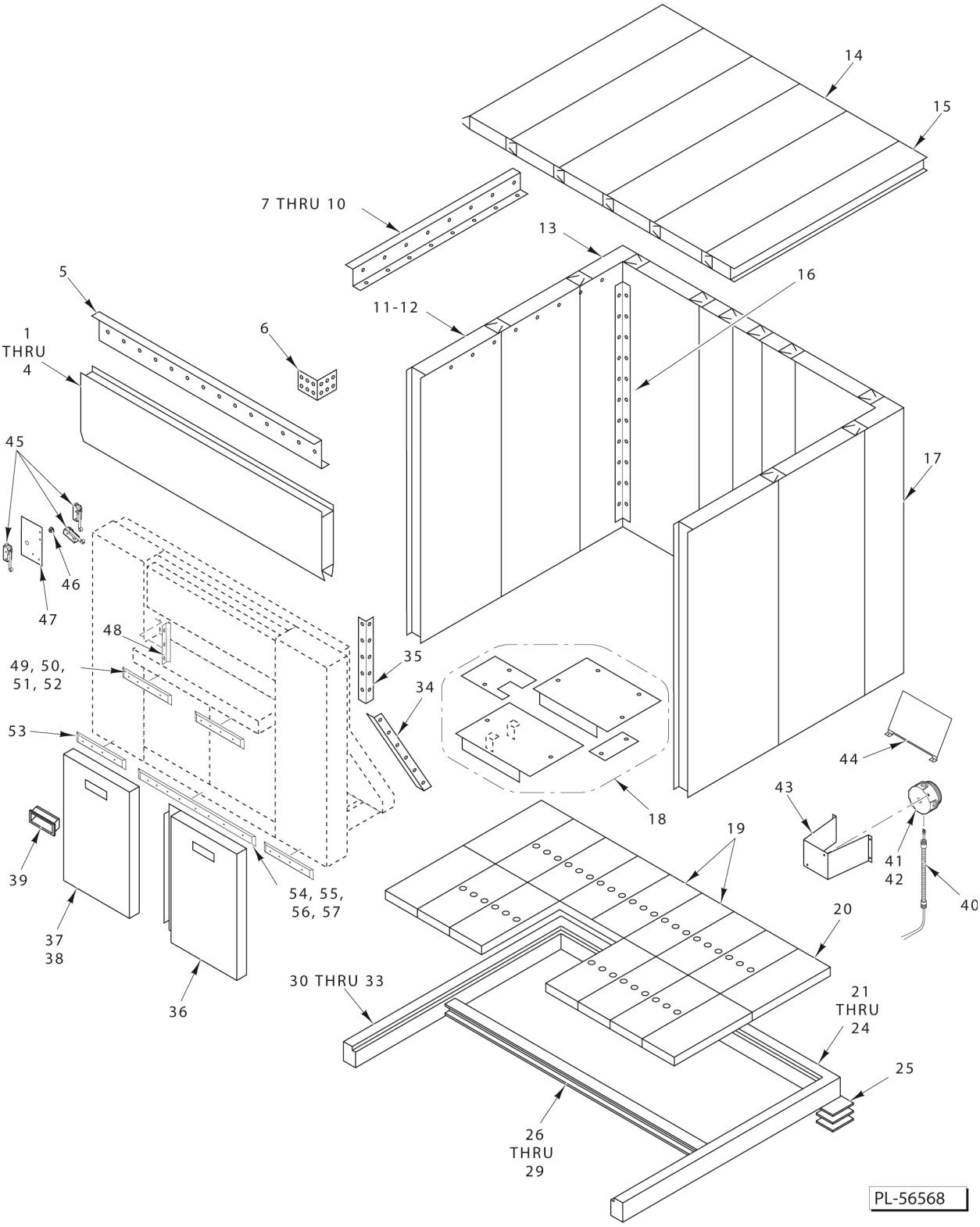

CABINET ASSEMBLY

CABINET ASSEMBLY

ILLUS. PL-56568	PART NO.	NAME OF PART	AMT.
1	01-1M1211-00001	Panel - Plain Upper Front (84.75 In.) (ML-132261)	1
2	01-1M1211-00002	Panel - Plain Upper Front (102.75 In.) (ML-132260)	1
3	01-1M1211-00003	Panel - Plain Upper Front (120.75 In.) (ML-132259)	1
4	01-1M1211-00004	Panel - Plain Upper Front (138.75 In.) (ML-132258)	1
5	01-10M932-00001	Bracket - Top Wall Corner	4
6	01-10M831-00007	Hanger - Ceiling (Sides)	2
7	01-10M831-00001	Hanger - Ceiling (Front & Rear) (ML-132261)	2
8	01-10M831-00002	Hanger - Ceiling (Front & Rear) (ML-132260)	2
9	01-10M831-00003	Hanger - Ceiling (Front & Rear) (ML-132259)	2
10	01-10M831-00004	Hanger - Ceiling (Front & Rear) (ML-132258)	2
11	01-10M820-0018C	Panel - Wall Cres. (18 x 83-1/2)	AR
12	01-10M820-0042C	Panel - Wall Cres. (42 x 83-1/2)	AR
13	01-10M822-00001	Corner - Wall (LH Rear)	1
14	01-10M820-00018	Panel - Ceiling	AR
15	01-10M820-00010	Panel - Ceiling	1
16	01-10M913-00009	Angle - Interior Trim (Inside Rear Corner)	2
17	01-10M822-00002	NLA - Obsolete--Corner - Wall (RH Rear)	1
18	01-1M1024-00001	Floor - Filler Package	1
19	01-10M867-00002	Floor - Section W/Holes	AR
20	01-10M867-00001	Floor - Section Plain	4
21	01-10M818-00001	Base - Rear (79.5 In.)	1
22	01-10M818-00002	Base - Rear (97.5 In.)	1
23	01-10M818-00003	Base - Rear (115.5 In.)	1
24	01-10M818-00004	Base - Rear (133.5 In.)	1
25	01-10M126-00001	Base Shim - Leveling	AR
26	01-10M832-00001	Beam - Floor (79.5 In.)	1
27	01-10M832-00002	Beam - Floor (97.5 In.)	1
28	01-10M832-00003	Beam - Floor (115.5 In.)	1
29	01-10M832-00004	Beam - Floor (133.5 In.)	1
30	01-10M817-00001	Base - Side Assy. (92.5 In.)	2
31	01-10M817-00002	Base - Side Assy. (68.5 In.)	1
32	01-10M817-00003	Base - Side Assy. (49.5 In.)	1
33	01-10M817-00004	Base - Side Assy. (76.5 In.)	1
34	01-10M913-00007	Angle - Interior Trim (Inside Rear Corner)	2
35	01-10M913-00008	Angle - Interior Trim (Inside Rear Corner)	2
36	01-1M2983-00001	Panel - Lower Access	1
37	01-1M2983-00002	Panel - Lower Access	1
38	01-1M2983-00003	Panel - Lower Access (18 Pan = 0; 24 Pan = 1; 30 Pan = 2; 36 Pan = 3)	AR
39	01-100V18-00110	Handle (Per Door)	1
40	01-1M3090-00001	Light Fixture (W/O Lamp)	1
41	01-1000V7-0014B	Base/Socket - Light Fixture	1
42	01-1000V7-00020	Halogen Lamp	1
43	01-1M3060-00001	Mount - Base	1
44	01-1M2825-00001	Reflector	1
45	01-1000V6-00332	Switch - SPDT 12A/125VAC	3
46	01-1000V5-00166	Bushing - Snap (for 0.75 Dia. Hole)	1
47	01-1M3056-00002	Bracket - Mounting	1
48	01-1M3061-00001	Deflector - Loading Door Air	2
49	01-10M768-00001	Bumper - Oven Front (23") (18 Pan)	2
50	01-10M768-00002	Bumper - Oven Front (32") (24 Pan)	2
51	01-10M768-00003	Bumper - Oven Front (41") (30 Pan)	2
52	01-10M768-00004	Bumper - Oven Front (50") (36 Pan)	2
53	01-10M915-00007	Guard - Cart (12.38")	2
54	01-10M915-00001	Guard - Cart (58") (18 Pan)	1
55	01-10M915-00002	Guard - Cart (76") (24 Pan)	1
56	01-10M915-00003	Guard - Cart (94") (30 Pan)	1
57	01-10M915-00004	Guard - Cart (112") (36 Pan)	1

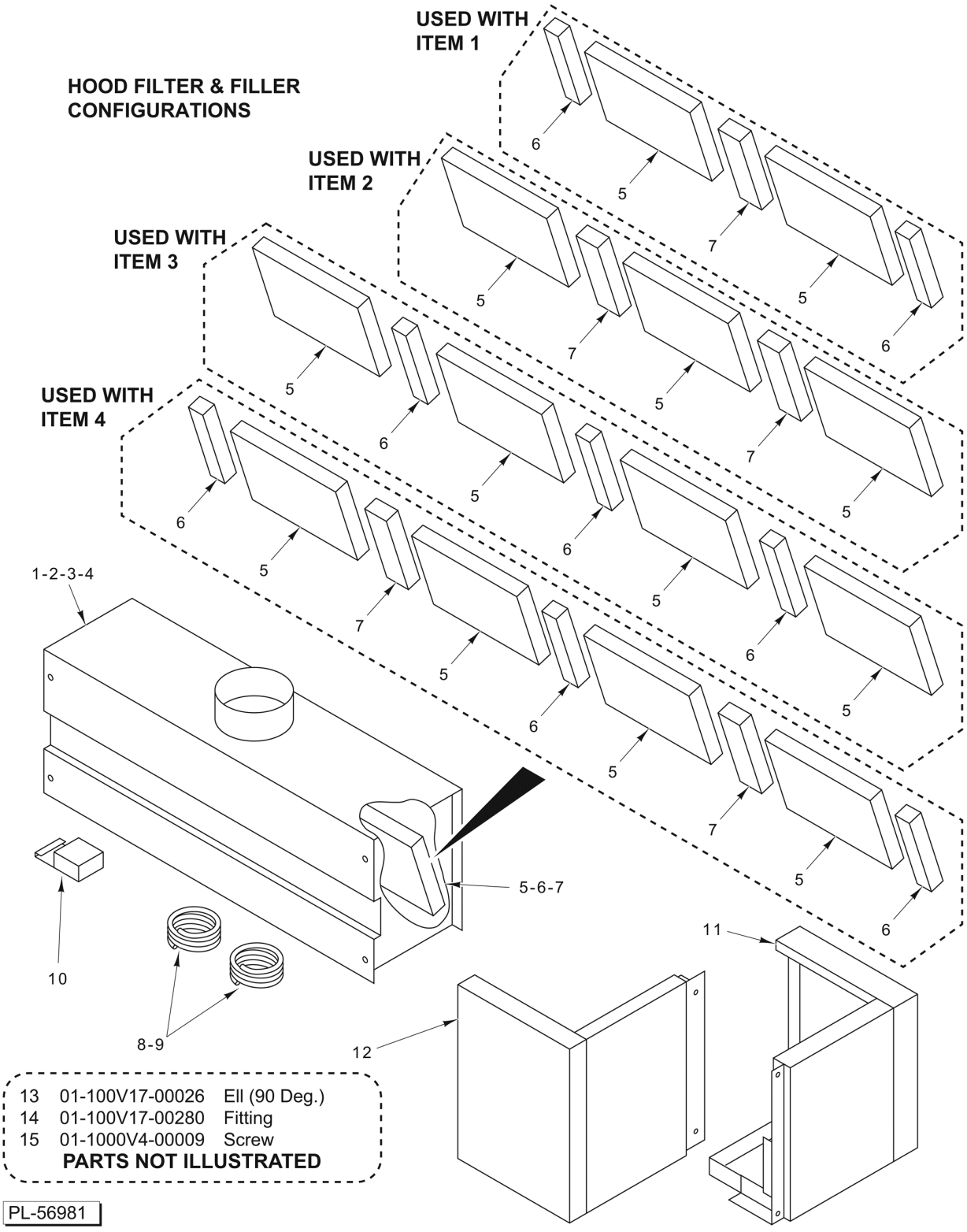
HOOD FILTER & FILLER CONFIGURATIONS
USED WITH ITEM 1
USED WITH ITEM 2
USED WITH ITEM 3
USED WITH ITEM 4
1-2-3-4
5-6-7
10
8-9
12
11
13 01-100V17-00026 Ell (90 Deg.)
14 01-100V17-00280 Fitting
15 01-1000V4-00009 Screw
PARTS NOT ILLUSTRATED
PL-56981

HOOD

HOOD

ILLUS. PL-56981	PART NO.	NAME OF PART	AMT.
1	01-1M2967-00001	Hood (M18)	1
2	01-1M2967-00002	Hood (M24)	1
3	01-1M2967-00003	Hood (M30)	1
4	01-1M2967-00004	Hood (M36)	1
5	01-100V18-00052	Filter - Hood (9.6 In. x 19.6 In.)	AR
6	01-1M3067-00002	Filler - Hood (5.32)	AR
7	01-1M3067-00003	Filler - Hood (8.85)	AR
8	01-1M1004-00100	Tube - Pilot (Gas & Pressure Switch) (M24, M30, & M36)	2
9	01-1M1004-00072	Tube - Pilot (Gas & Pressure Switch) (M18)	2
10	01-1M3032-00001	Cup - Grease	AR
11	01-1M3037-00001	Enclosure Jamb Top (RH)	1
12	01-1M3037-00002	Enclosure Jamb Top (LH)	1
13	01-100V17-00026	Tube - Ell 90 Deg. 1/4	AR
14	01-100V17-00280	Fitting - Compression (1/8 NPT)	1
15	01-1000V4-00009	Screw - Sheet Metal Hex Hd	AR

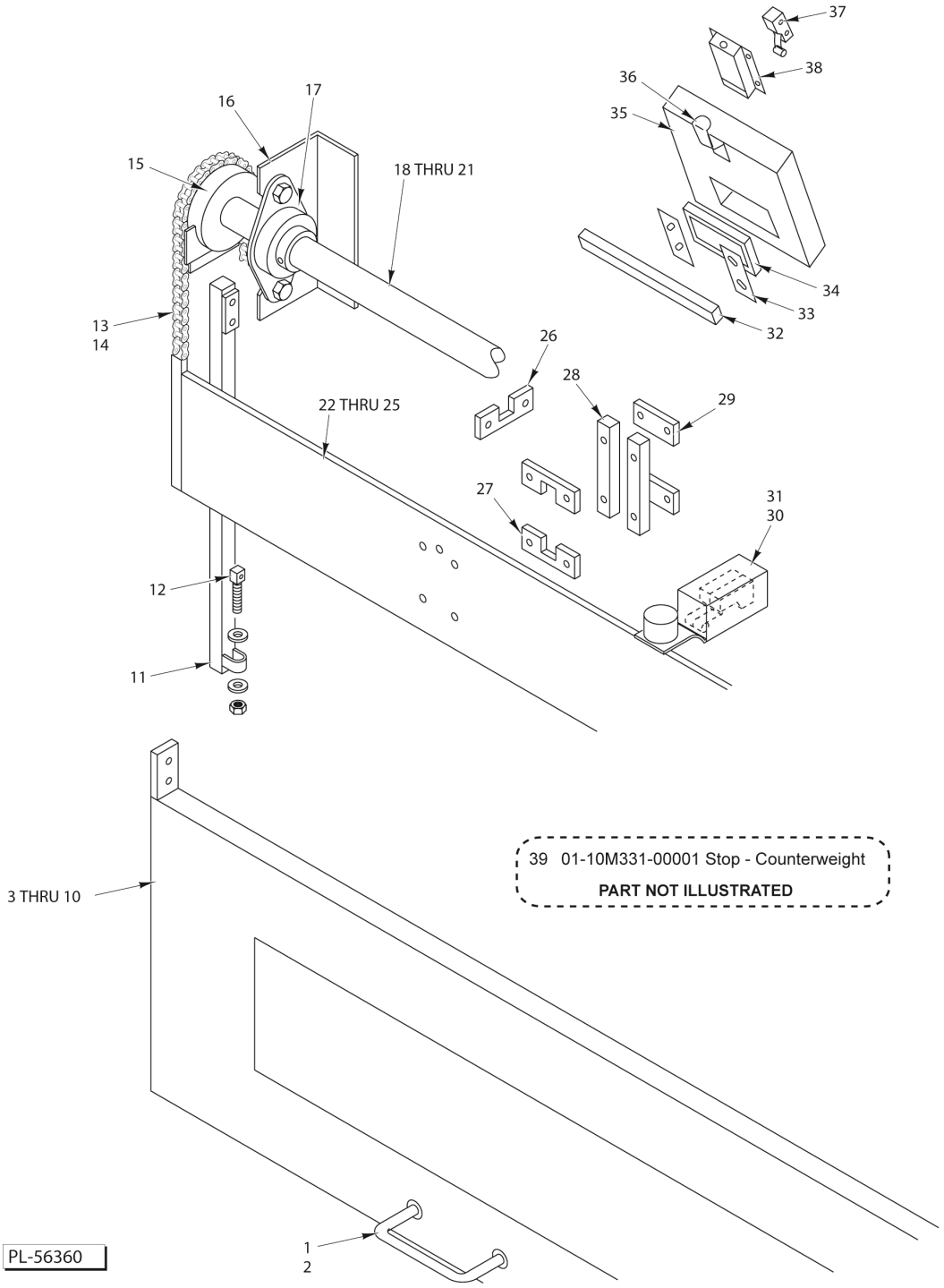

LOADING AND SERVICE DOOR

LOADING AND SERVICE DOOR

ILLUS. PL-56360	PART NO.	NAME OF PART	AMT.
1	01-1M2871-00001	Handle - Door	1
2	01-1M2872-00001	Plate - Backer (Door Handle)	1
3	01-1M2868-00001	Door - Loading W/Window (ML-132261)	1
4	01-1M2868-00002	Door - Loading W/Window (ML-132260)	1
5	01-1M2868-00003	Door - Loading W/Window (ML-132259)	1
6	01-1M2868-00004	Door - Loading W/Window (ML-132258)	1
7	01-1M2868-00005	Door - Loading W/O Window (ML-132261)	1
8	01-1M2868-00006	Door - Loading W/O Window (ML-132260)	1
9	01-1M2868-00007	Door - Loading W/O Window (ML-132259)	1
10	01-1M2868-00008	Door - Loading W/O Window (ML-132258)	1
11	01-10M440-00001	Post - Door Guide	2
12	01-100M27-00001	Anchor - Chain	2
13	01-1000V3-00051	Chain - #40 (47 Pitches)	2
14	01-1000V3-00008	Link - Connector (#40)	2
15	01-1000V3-00043	Sprocket - #40B 1 In. Bore (21T)	2
16	01-100M41-00001	Bracket	2
17	01-1000V0-00008	Bearing - Ball	2
18	01-10M758-00001	Shaft - Counterweight (58-1/2 In.) (ML-132261)	1
19	01-10M758-00002	Shaft - Counterweight (76-1/2 In.) (ML-132260)	1
20	01-10M758-00003	Shaft - Counterweight (94-1/2 In.) (ML-132259)	1
21	01-10M758-00004	Shaft - Counterweight (112-1/2 In.) (ML-132258)	1
22	01-10M764-00010	Counterweight Assy. (57-1/4 In.) (ML-132261)	1
23	01-10M764-00011	Counterweight Assy. (75-1/4 In.) (ML-132260)	1
24	01-10M764-00012	Counterweight Assy. (93-1/4 In.) (ML-132259)	1
25	01-10M764-00013	Counterweight Assy. (111-1/4 In.) (ML-132258)	1
26	01-1M1251-00001	Bumper - Shaft Counterweight	1
27	01-100M40-00001	Guide - Door Weight	2
28	01-100M40-00003	Guide - Door Weight	2
29	01-100M40-00002	Guide - Door Weight	2
30	01-1M1015-00001	Box - Door Interlock Assy	1
31	01-1000V6-00332	Switch - SPDT 12A/125VAC	2
32	01-10M929-00001	Bar - Door Retention	1
33	01-100M97-00002	Retainer - Window	2
34	01-1M1419-00001	Window - View	1
35	01-10M774-00001	Door - Access (20 Degree Panel)	1
36	01-1M1002-00001	Actuator - Doopr Interlock	1
37	01-1000V6-00065	Microswitch	2
38	01-1M1003-00001	Bracket - Service Door Interlock	1
39	01-10M331-00001	Stop - Counterweight	1

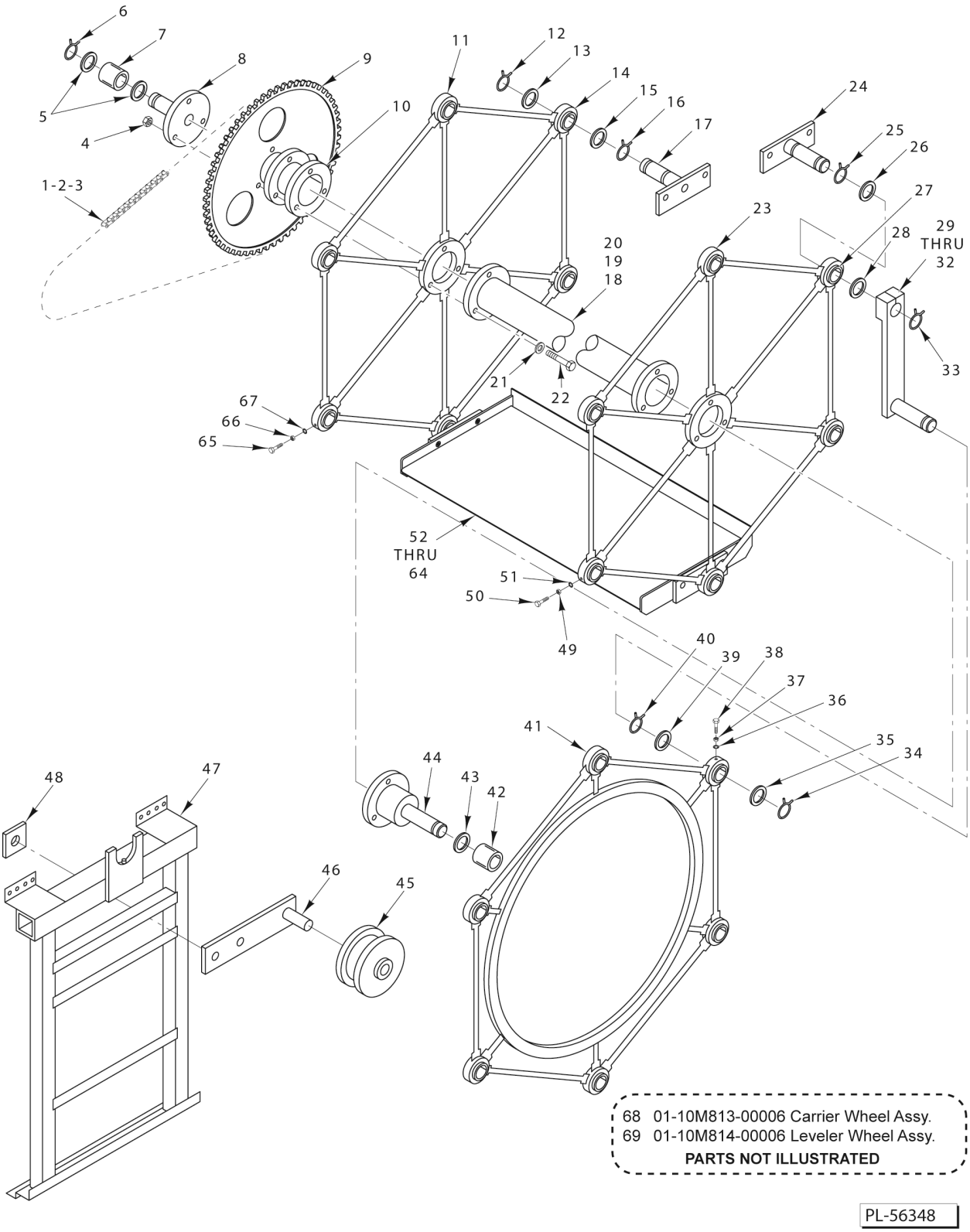

MAIN DRIVE ASSEMBLY

MAIN DRIVE ASSEMBLY

ILLUS. PL-56348	PART NO.	NAME OF PART	AMT.
1	01-10M753-0001C	Chain - Main Drive	1
2	01-1000V3-00096	Link - Master	1
3	01-1000V3-00095	Link Roller	1
4	01-1000V4-00007	Lock Nut 1/2 (Vibresist)	1
5	01-1000V0-00019	Washer - Thrust	2
6	01-1000V1-00011	Ring - Snap (1-15/16 In.)	1
7	01-1M1112-00001	Bearing - Main Assy	1
8	01-10M540-00001	Carrier - Journal End Assy	1
9	01-100M61-00096	Sprocket - #60 (96T)	1
10	01-10M815-00005	Shaft - Main Assy. (3-1/4 In.)	1
11	01-10M823-00006	Wheel - Carrier	1
12	01-1000V1-00004	Ring - Snap (1-1/2 In.)	AR
13	01-1000V0-00018	Thrust Washer	AR
14	01-1M3683-00002	Bearing Assy	AR
15	01-1000V0-00018	Thrust Washer	AR
16	01-1000V1-00004	Ring - Snap (1-1/2 In.)	AR
17	01-10M562-00001	Support - Tray	AR
18	01-10M815-00001	Shaft (62-1/2 In.)	1
19	01-10M557-00002	Shaft (80-1/2 In.)	1
20	01-10M815-00003	Shaft (98-1/2 In.)	1
21	01-1000V4-00008	Washer 1/2	1
22	01-1000V4-00028	Bolt - Shear 1/2 x 2-1/4 Hex Hd	1
23	01-10M823-00006	Wheel - Carrier	1
24	01-10M562-00002	Support - Tray	AR
25	01-1000V1-00004	Ring - Snap (1-1/2 In.)	AR
26	01-1000V0-00018	Thrust Washer	AR
27	01-1M3683-00002	Bearing Assy	AR
28	01-1000V0-00018	Thrust Washer	AR
29	01-10M563-00001	Leveler - Arm Assy	AR
30	01-1000V4-00265	Bolt 1/2-13 x 2 Hex Hd	AR
31	01-1000V4-00264	Lockwasher 1/2 Internal Tooth	AR
32	01-1000V4-00266	Nut 1/2-13 Hex	AR
33	01-1000V1-00004	Ring - Snap (1-1/2 In.)	AR
34	01-1000V1-00004		AR
35	01-1000V0-00018	Thrust Washer	AR
36	01-1000V4-00264	Lockwasher 1/2 Internal Tooth	AR
37	01-1000V4-00266	Nut 1/2-13 Hex	AR
38	01-1000V4-00267	Bolt 1/2-13 x 1 Hex Hd	AR
39	01-1000V0-00018	Thrust Washer	AR
40	01-1000V1-00004	Ring - Snap (1-1/2 In.)	AR
41	01-10M824-00006	Wheel Leveler	1
42	01-1M1112-00001	Bearing - Main Assy	1
43	01-1000V0-00019	Washer - Thrust	1
44	01-10M539-00001	Leveler - Journal End Assy	1
45	01-10M556-00001	Wheel - Guide Assy	2
46	01-10M554-00004	Guide - Wheel Mount Assy	2
47	01-10M816-00001	Stand - Main	2
48	01-10M278-00001	Pad - Oven Guide Roll Arm	4
49	01-1000V4-00266	Nut 1/2-13 Hex	AR
50	01-1000V4-00267	Bolt 1/2-13 x 1 Hex Hd	AR
51	01-1000V4-00264	Lockwasher 1/2 Internal Tooth	AR
52	01-1M2753-00058	Tray - Perforated (58 x 26)	AR
53	01-1M2753-00076	Tray - Perforated (76 x 26)	AR
54	01-1M2753-00094	Tray - Perforated (94 x 26)	AR
55	01-1M2753-00112	Tray - Perforated (112 x 26)	AR

MAIN DRIVE ASSEMBLY

ILLUS. PL-56348	PART NO.	NAME OF PART	AMT.
56	01-1M2754-00058	Tray - Solid (58 x 26)	AR
57	01-1M2754-00076	Tray - Solid (76 x 26)	AR
58	01-1M2754-00094	Tray - Solid (94 x 26)	AR
59	01-1M2754-00112	Tray - Solid (112 x 26)	AR
60	01-100V21-094-1	Liner - Tray Cement Fiber (1/2 x 25-3/4 x 18)	AR
61	01-100V21-094-2	Liner - Tray Cement Fiber (1/2 x 25-3/4 x 28-5/8)	AR
62	01-100V21-094-3	Liner - Tray Cement Fiber (1/2 x 25-3/4 x 36)	AR
63	01-1M2747-00001	Retainer - Tray Liner	AR
64	01-1M2764-00001	Angle - Tray Ends	AR
65	01-1000V4-00267	Bolt 1/2-13 x 1 Hex Hd	AR
66	01-1000V4-00266	Nut 1/2-13 Hex	AR
67	01-1000V4-00264	Lockwasher 1/2 Internal Tooth	AR
68	01-10M813-00006	Carrier Wheel Assy. (Incls. Items 11 thru 20, 65, 66, & 67)	1
69	01-10M814-00006	Leveler Wheel Assy. (Incls. Items 23 thru 49, 50, & 51)	1

NOTES

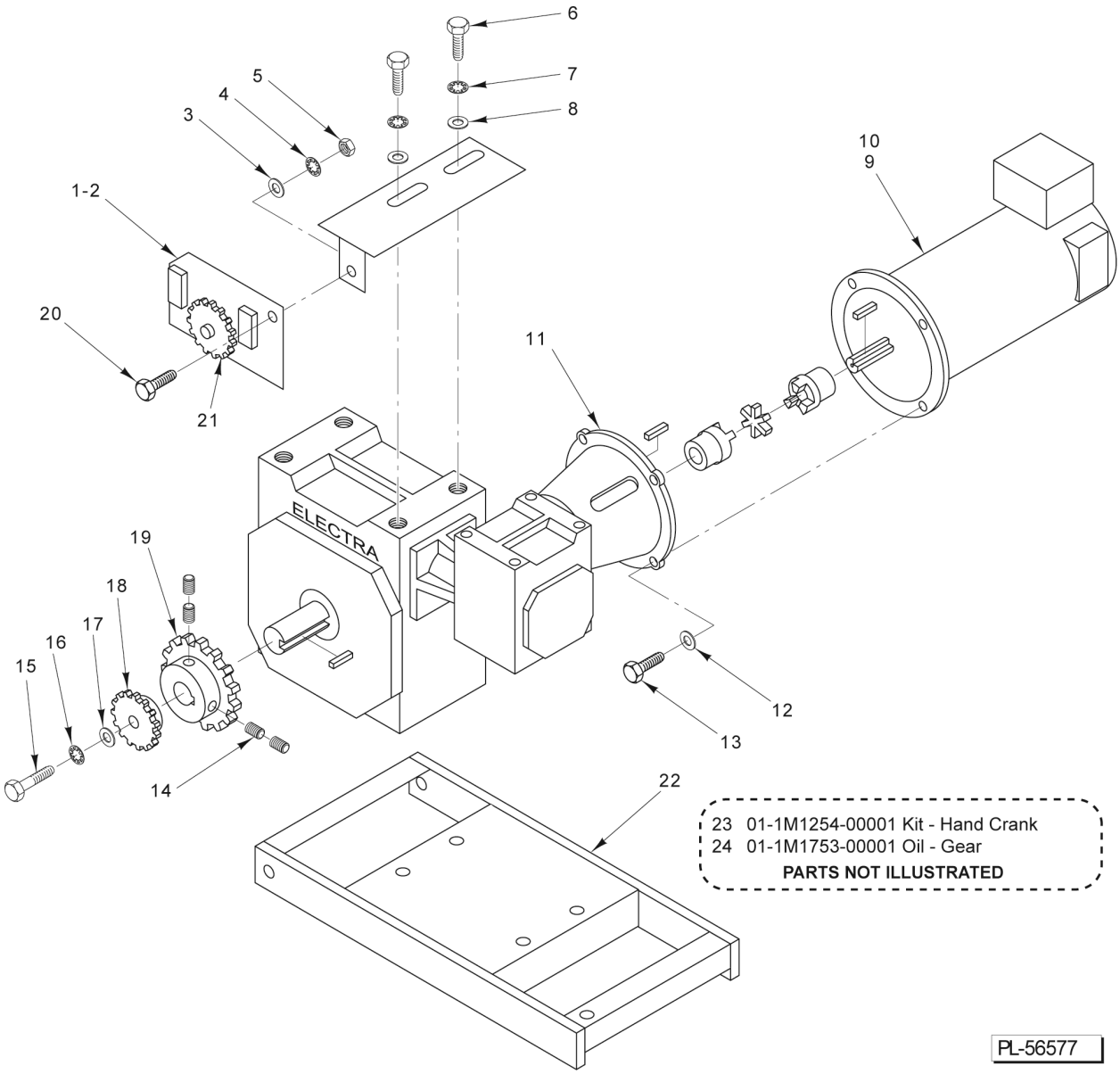

MAIN DRIVE MOTOR ASSEMBLY

MAIN DRIVE MOTOR ASSEMBLY

ILLUS. PL-56577	PART NO.	NAME OF PART	AMT.
1	01-1M3005-00001	Pointer Assy. (Incls. Item 2)	1
2	01-1000V6-00192	Switch - Micro	2
3		Washer 3/8	1
4		Lockwasher 3/8	1
5		Nut 3/8-16 Hex	1
6		Mach. Screw 3/8-16 x 3/4 Hex Hd	2
7		Lockwasher 3/8	2
8		Washer 3/8	2
9	01-10M512-00001	Motor Assy	1
10	01-1000V8-00064	Brush - Motor	3
11	01-1000V2-00025	Gearbox (300:1)	1
12		Lockwasher 3/8	4
13		Mach. Screw 3/8-16 x 1 Hex Hd	4
14		Set Screw 5/16-18 x 1/2	4
15		Mach. Screw 3/8-16 x 1 Hex Hd	1
16		Lockwasher 3/8	1
17		Washer 3/8	1
18	01-1000V2-00022	Gear - Spur (48T)	1
19	01-1000V3-00044	Sprocket - Gear Chain #60B (16T)	1
20		Mach. Screw 3/8-16 x 3/4 Hex Hd	1
21	01-1M3002-00001	Gear (Tray Number & Stop)	1
22	01-10M578-00003	Mount - Motor	1
23	01-1M1254-00001	Kit - Hand Crank	1
24	01-1M1753-00001	Oil - Gear (Synthetic)	1

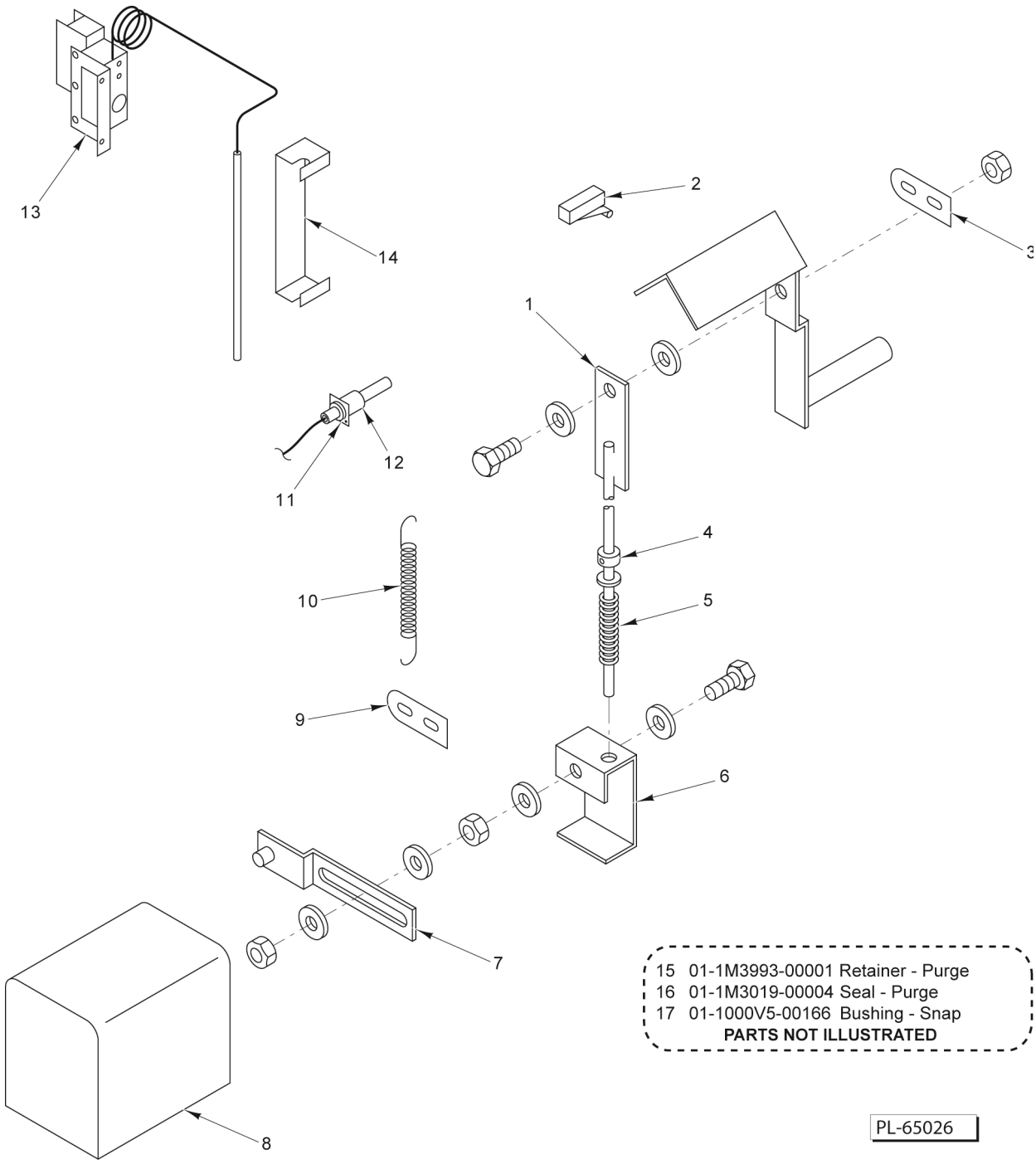
13
14
2
3
1
12
11
4
10
5
9
6
7
8
15 01-1M3993-00001 Retainer - Purge
16 01-1M3019-00004 Seal - Purge
17 01-1000V5-00166 Bushing - Snap
PARTS NOT ILLUSTRATED
PL-65026

PURGE KIT

PURGE KIT

ILLUS. PL-PL-65026	PART NO.	NAME OF PART	AMT.
1	01-1M3049-00001	Actuator Weldment - Face Panel	1
2	01-1000V6-00332	Micro-Switch - Lever Activated	3
3	01-1M3981-00001	Clip - Spring	1
4	01-1000V1-00017	Collar - Set	1
5	01-100V20-00015	Spring	1
6	01-1M3063-00001	Clip - Purge Arm	1
7	01-1M3064-00001	Arm - Crank	1
8	01-1000V8-00033	Motor - Damper	1
9	01-1M3981-00001	Clip - Spring	1
10	01-100V20-00016	Spring - Extension	1
11	01-1A1907-00001	Mounting Assy. - Thermocouple	1
12	01-100V10-00141	Thermocouple	1
13	01-1000V6-00118	Thermostat - High Limit	1
14	01-1M1706-00001	Bracket - High Limit	1
15	01-1M3993-00001	Retainer - Purge, Face Panel	8
16	01-1M3019-00004	Seal - Purge (Face Panel) (112.42 In.) (M36)	1
17	01-1000V5-00166	Bushing - Snap	1

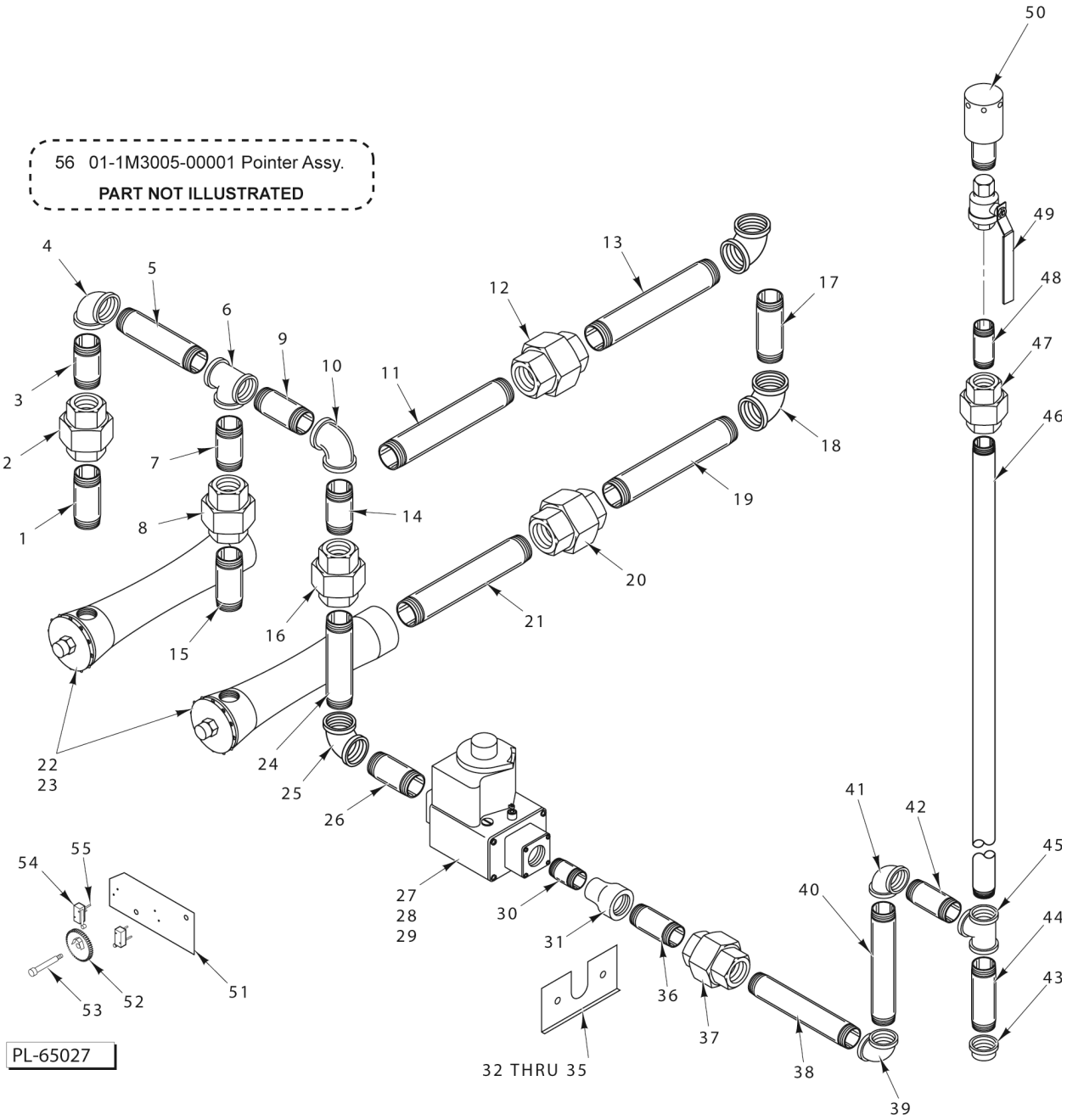

GAS SUPPLY ASSEMBLY

GAS SUPPLY ASSEMBLY

ILLUS. PL-PL-65027	PART NO.	NAME OF PART	AMT.
1	01-100V17-00115	Pipe 1 x 2	1
2	01-100V17-00117	Union 1 In	1
3	01-100V17-00115	Pipe 1 x 2	1
4	01-100V17-00119	Elbow - Reducing 1 x 1-1/4	1
5	01-100V17-00121	Pipe 1-1/4 x 6	1
6	01-100V17-00122	Tee - Reducing 1-1/4 x 1-1/4	1
7	01-100V17-00115	Pipe 1 x 2	1
8	01-100V17-00117	Union 1 In	1
9	01-100V17-00120	Pipe 1-1/4 x 3	1
10	01-100V17-00119	Elbow - Reducing 1 x 1-1/4	1
11	01-100V17-00123	Pipe 2-1/2 x 8	1
12	01-100V17-00063	Union 2-1/2	1
13	01-100V17-00123	Pipe 2-1/2 x 8	1
14	01-100V17-00115	Pipe 1 x 2	1
15	01-100V17-00115	Pipe 1 x 2	1
16	01-100V17-00117	Union 1 In	1
17	01-100V17-00324	Pipe 2-1/2 x 3	1
18	01-100V17-00103	Ell 2-1/2 x 45 Deg	1
19	01-100V17-00123	Pipe 2-1/2 x 8	1
20	01-100V17-00063	Union 2-1/2	1
21	01-100V17-00123	Pipe 2-1/2 x 8	1
22	01-1000V9-00050	Mixer - Gas 2-1/2 In. Dia. (NAT)	1
23	01-1000V9-00080	Mixer - Compound (LP)	1
24	01-1A1167-00450	Pipe NPT 4-1/2 In	1
25	01-100V17-00118	Ell - Reducing 90 Deg. 1 x 3/4	1
26	01-100V17-00113	Pipe 3/4 x 3	1
27	01-1000V9-00075	Valve - Gas 3/4 x 3/4 (1979 to 1987)	1
28	01-1000V9-00121	Valve - Gas 1/2 x 3/4 (1987 to Present)	1
29	01-1000V9-00128	Kit - LP Conversion	1
30		Pipe - Close 1/2 Dia	1
31		Reducer - Bell 3/4 x 1/2	1
32	01-1M1014-00001	Support - Gas Assy	1
33		Bolt 1/4-20 Hex Hd	2
34		Washer 1/4	2
35		Nut 1/4-20 Hex	2
36	01-1M1093-00003	Pipe - Mixer Gas Supply Assy	2
37	01-100V17-00114	Union 3/4	1
38		Pipe	1
39	01-100V17-00118	Ell - Reducing 90 Deg. 1 x 3/4	1
40	01-1A1167-01300	Pipe NPT 13 In	1
41		Elbow	1
42	01-1A1167-00300	Pipe NPT 3 In	1
43		Cap - Pipe 1 In	1
44	01-1A1167-00500	Pipe NPT 5 In	1
45		Tee - Pipe	1
46	01-1A1167-02900	Pipe NPT 29 In	1
47	01-100V17-00117	Union 1 In	1
48	01-1A1167-00300	Pipe NPT 3 In	1
49	01-100V17-00399	Valve - Butterfy 1 In. (Brass)	1
50	01-1M3052-00001	Inlet - Gas Supply	1
51	01-1M2985-00001	Plate - Pointer	1
52	01-1M3002-00001	Pointer Assy. - Gear (Use With Item 23)	1
53	01-1000V4-00109	Screw - Shoulder 3/8 x 1/2 Socket Hd	1
54	01-1000V6-00192	Switch - Snap	2
55	01-1M3089-00001	Spacer - Switch (Pointer)	4
56	01-1M3005-00001	Pointer Assy. (Incls. Items 51 thru 55)	1

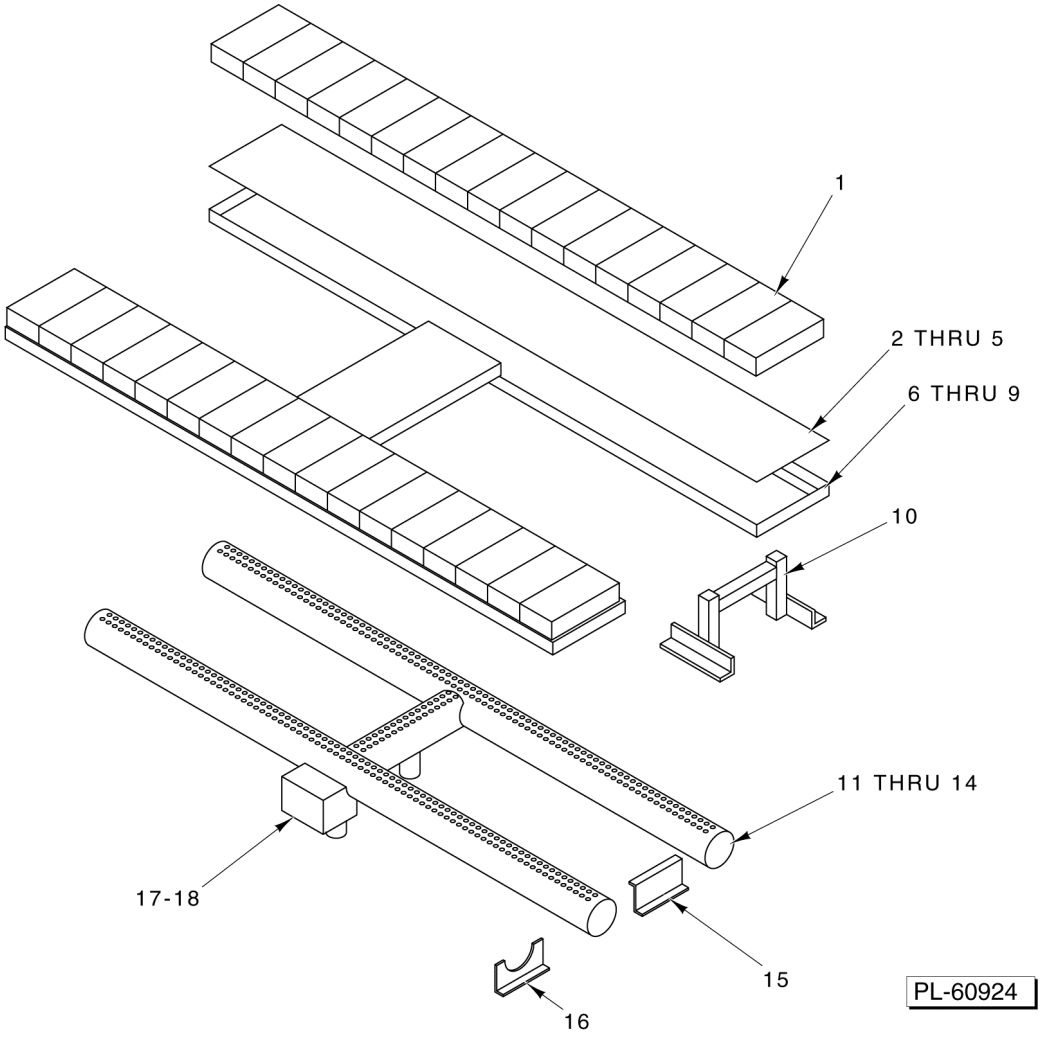

BURNER ASSEMBLY

BURNER ASSEMBLY

ILLUS. PL-60924	PART NO.	NAME OF PART	AMT.
1	01-100V21-00003	Firebrick 4-1/2 x 9 x 2-1/2	AR
2	01-10M862-00001	Liner - Brick (ML-132261)	2
3	01-10M862-00002	Liner - Brick (ML-132260)	2
4	01-10M862-00003	Liner - Brick (ML-132259)	2
5	01-10M862-00004	Liner - Brick (ML-132258)	2
6	01-10M860-00001	Rack - Brick (59 In.) (ML-132261)	2
7	01-10M860-00002	Rack - Brick (77 In.) (ML-132260)	2
8	01-10M860-00003	Rack - Brick (95 In.) (ML-132259)	2
9	01-10M860-00004	Rack - Brick (113 In.) (ML-132258)	2
10	01-10M581-00001	Stand - Brick Rack	1
11	01-10M990-00001	Burner - 2 Inlets (58 In.) (ML-132261)	1
12	01-10M990-00002	Burner - 2 Inlets (76 In.) (ML-132260)	1
13	01-10M990-00003	Burner - 2 Inlets (94 In.) (ML-132259)	1
14	01-10M990-00004	Burner - 2 Inlets (112 In.) (ML-132258)	1
15	01-10M678-00002	Support - Rear Burner	2
16	01-10M678-00001	Support - Forward Burner	2
17	01-1M1131-00002	Kit - Pilot Replacement (LP) (Incls. Ignitor & Flame Sensor)	1
18	01-1M1131-00001	Kit - Pilot Replacement (NAT) (Incls. Ignitor & Flame Sensor)	1