# CATALOG OF REPLACEMENT PARTS




## Rotisserie Ovens HR7E
## ROTTISSERIE OVENS (MLs - 132092, 132093, 132094, 132095)

A product of HOBART 701 S. RIDGE AVENUE TROY, OHIO 45374-0001

FORM 43102 Rev. A (February 2017)

 © HOBART 2017

## Table of Contents

5 OVEN DOORS
7 STEEL OVEN BACK (ML-132094 & ML-132095)
9 OVEN FRAME AND PANELS
11 CONTROLS AND COMPONENTS
13 HEATING AND VENTING
15 ROTISSERIE AND DRIVE MOTOR
17 STACKING KIT
19 ACCESSORIES

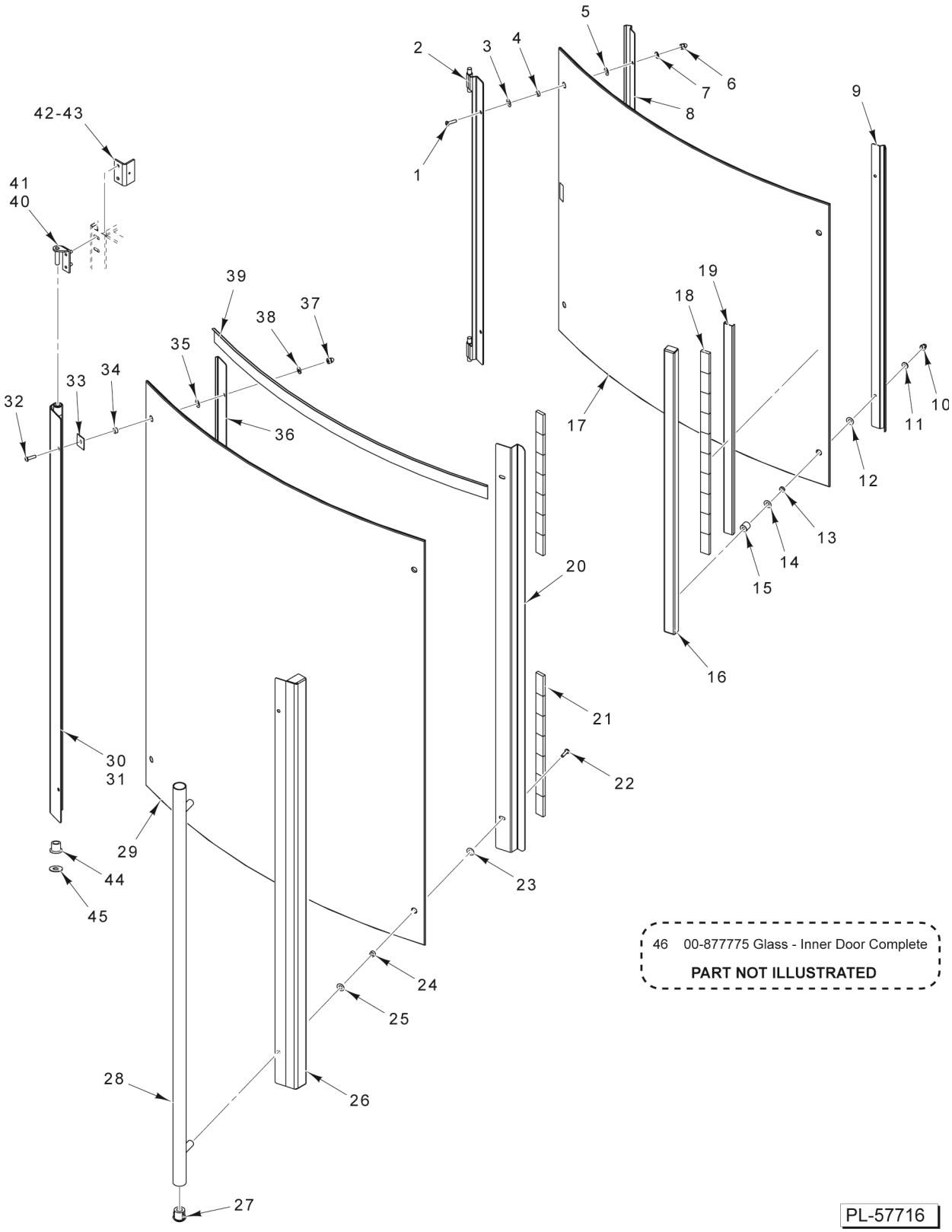
1
2
3
4
5
6
7
8
9
10
11
12
13
14
15
16
17
18
19
20
21
22
23
24
25
26
27
28
29
30
31
32
33
34
35
36
37
38
39
40
41
42-43
44
45
46 00-877775 Glass - Inner Door Complete
PART NOT ILLUSTRATED
PL-57716

## OVEN DOORS

## OVEN DOORS

| ILLUS. PL-57716 | PART NO. | NAME OF PART | AMT. |
|---|---|---|---|
| 1 | SC-118-22 | Mach. Screw 10-24 x 5/8 Phil. Truss Hd | 2 |
| 2 | 00-425900-00028 | Hinge Assy. (Inner Door) | 1 |
| 3 | 00-425900-00187 | Washer | 2 |
| 4 | 00-425900-00192 | Spacer - Inner Glass | 2 |
| 5 | 00-425900-00187 | Washer | 2 |
| 6 | NS-025-01 | Crown Nut 10-24 (SST) | 2 |
| 7 | WS-019-20 | Washer | 2 |
| 8 | 00-877954 | Support - Inner Hinge | 1 |
| 9 | 00-877954 | Support - Inner Hinge | 1 |
| 10 | NS-025-01 | Crown Nut 10-24 (SST) | 2 |
| 11 | WS-019-20 | Washer | 2 |
| 12 | 00-425900-00187 | Washer | 2 |
| 13 | 00-425900-00192 | Spacer - Inner Glass | 2 |
| 14 | 00-425900-00187 | Washer | 2 |
| 15 | 00-425900-00191 | Spacer - Magnet Holder | 2 |
| 16 | 00-425900-00098 | Holder - Magnet Assy | 1 |
| 17 | 00-425900-00063 | Glass - Inside (Glass Only) | 1 |
| 18 | 00-360128 | Magnet - Door | 10 |
| 19 | 00-425900-00099 | Section - Magnet Filler | 1 |
| 20 | 00-877967 | NLA - Obsolete--Grip - Handle Attachment | 1 |
| 21 | 00-360128 | Magnet - Door | 14 |
| 22 | SC-118-22 | Mach. Screw 10-24 x 5/8 Phil. Truss Hd | 2 |
| 23 | 00-425900-00187 | Washer | 2 |
| 24 | 00-425900-00188 | Spacer - Outer Glass | 2 |
| 25 | 00-425900-00187 | Washer | 2 |
| 26 | 00-425900-00042 | Section - Magnet Assy | 1 |
| 27 | 00-474831 | Plug - Handle | 2 |
| 28 | 00-877862 | Handle Assy. (Incls. Item 27) | 1 |
| 29 | 00-891064 | Kit - Outer Door Assy. (Incls. Items 32 thru 39) | 1 |
| 30 | 00-425900-00027 | Hinge Assy | 1 |
| 31 | 00-877808 | Hinge Assy. (Rear) (Outer Door) | 1 |
| 32 | SC-118-22 | Mach. Screw 10-24 x 5/8 Phil. Truss Hd | 2 |
| *33 | | Tape - Foam | AR |
| 34 | 00-425900-00188 | Spacer - Outer Glass | 2 |
| 35 | 00-425900-00187 | Washer | 2 |
| 36 | 00-425900-00096 | Support - Outer Hinge | 1 |
| 37 | NS-025-01 | Crown Nut 10-24 (SST) | 2 |
| 38 | WS-019-20 | Washer | 2 |
| *39 | | Protection - Edge | 2 |
| 40 | 00-877964 | Hinge Assy. (For Door with Hinges on Left Side) | 1 |
| 41 | 00-877963 | Hinge Assy. (For Door with Hinges on Right SIde) | 1 |
| 42 | 00-425900-00142 | Retainer - Hinge (Adjustable) | 1 |
| 43 | SC-110-13 | Mach. Screw 10-32 x 5/8 Phil. Rd. Hd | 1 |
| 44 | 00-877953 | Bearing - Bushing | AR |
| 45 | WS-005-42 | Washer | AR |
| 46 | 00-877775 | Glass - Inner Door Complete (Includes items 9-16) | 1 |

* No Service Part Available, Included In Kit 00-891064.

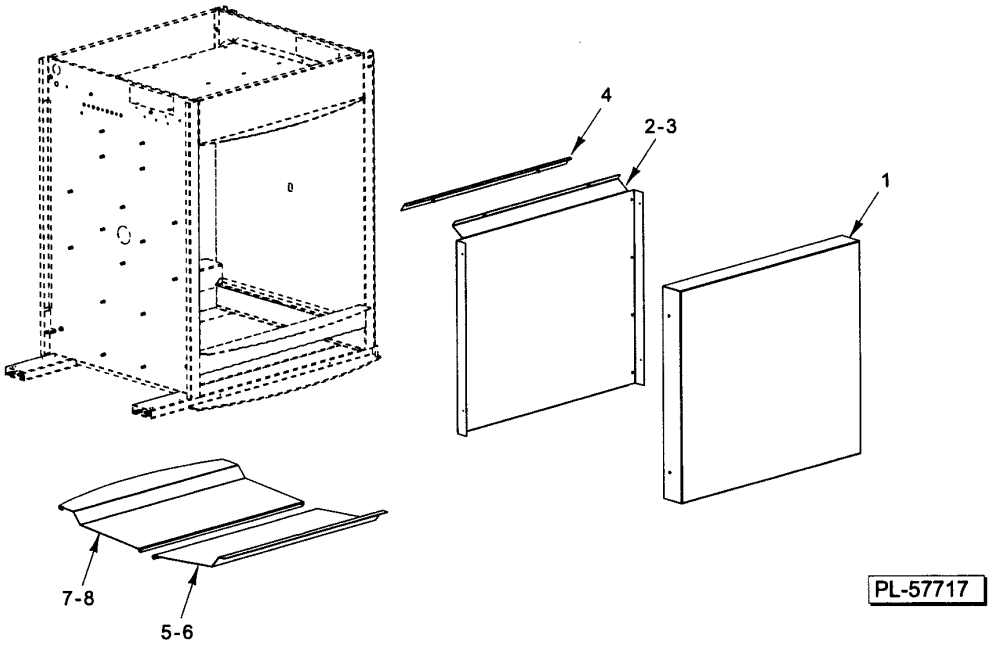


**STEEL OVEN BACK**
**(ML-132094 & ML-132095)**

## STEEL OVEN BACK
## (ML-132094 & ML-132095)

| ILLUS. PL-57717 | PART NO. | NAME OF PART | AMT. |
|---|---|---|---|
| 1 | 00-877922 | Cover Assy. (SST) | 1 |
| 2 | 00-877912-00001 | Panel - Inside (SST) | 1 |
| 3 | 00-877912-00002 | Panel - Inside (Coated) | 1 |
| 4 | 00-877911 | Panel - Spacer Assy | 1 |
| 5 | 00-877915-00001 | Shield - Drip (Back) (SST) | 1 |
| 6 | 00-877915-00002 | Shield - Drip (Back) (Coated) | 1 |
| 7 | 00-877947-00001 | Shield - Drip (SST) | 1 |
| 8 | 00-877947-00002 | Shield - Drip (Coated) | 1 |

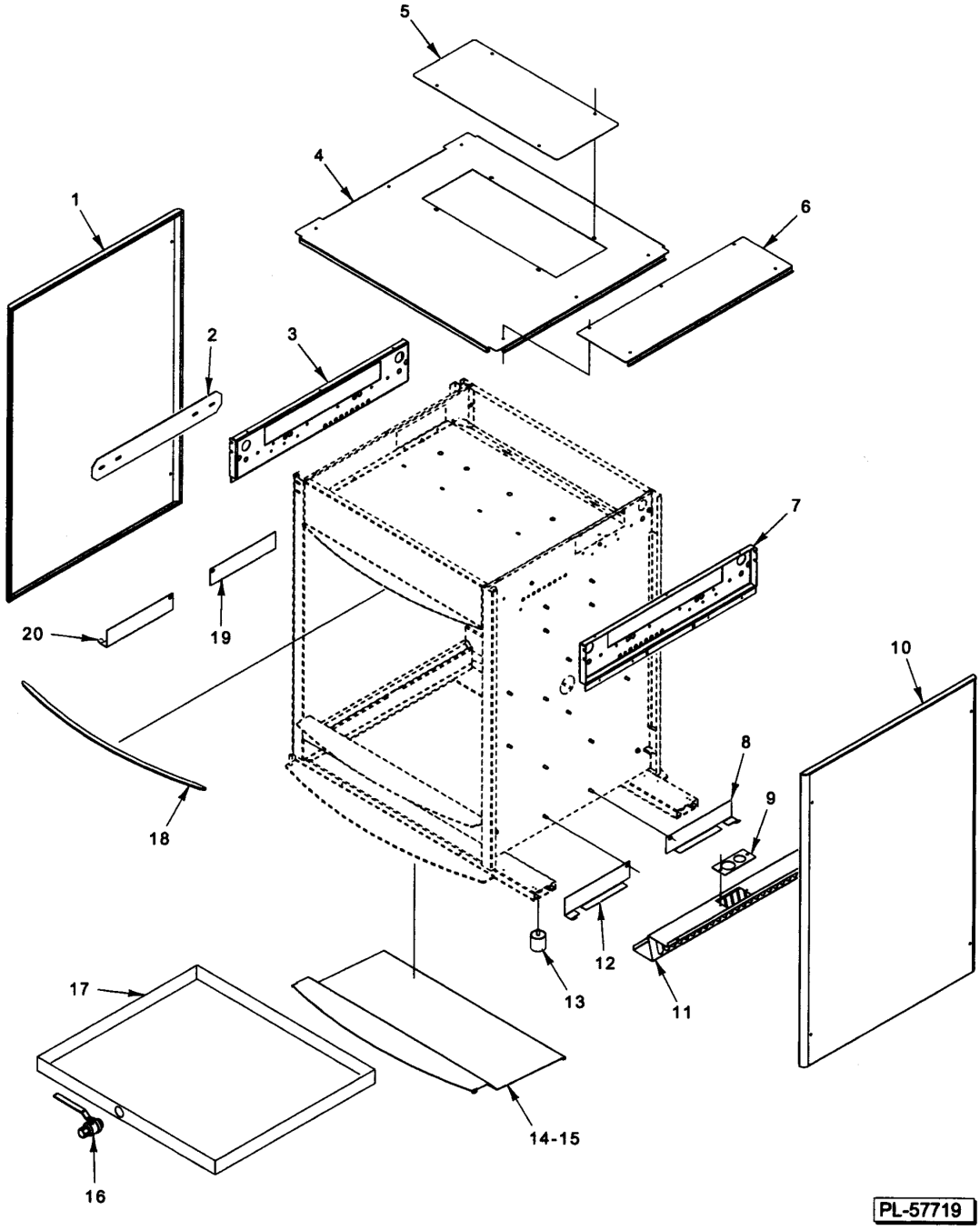


**OVEN FRAME AND PANELS**

## OVEN FRAME AND PANELS

## OVEN FRAME AND PANELS

| ILLUS. PL-57719 | PART NO. | NAME OF PART | AMT. |
|---|---|---|---|
| 1 | 00-425900-00026 | Panel - Outer (LH) | 1 |
| 2 | 00-877905 | Retainer - Insulation | 1 |
| 3 | 00-877796 | Plate - Upper Support | 1 |
| 4 | 00-425900-00093 | Panel - Outer (Top) | 1 |
| 5 | 00-425900-00125 | Cover - Vent Hatch | 1 |
| 6 | 00-425900-00094 | Cover - Electrical | 1 |
| 7 | 00-877796 | Plate - Upper Support | 1 |
| 8 | 00-877798 | Guard - Lower Right | 1 |
| 9 | 00-425900-00137 | NLA - Obsolete--Plate - Power Conduits | 1 |
| 10 | 00-425900-00026 | Panel - Outer (RH) | 1 |
| 11 | 00-425900-00136 | Bin - Spark | 1 |
| 12 | 00-877797 | Guard - Lower Left | 1 |
| 13 | 00-877807 | Foot (Rubber) | 4 |
| 14 | 00-877947-00001 | Shield - Drip (Bottom) (ML-132092) | 2 |
| 15 | 00-877947-00002 | Shield - Drip (Bottom) (Coated) (ML-132093) | 2 |
| 16 | 00-877933 | Valve - Drain | 1 |
| 17 | 00-877932 | Pan - Drain Assy | 1 |
| 18 | 00-425900-00206 | Gasket | 1 |
| 19 | 00-877797 | Guard - Lower Left | 1 |
| 20 | 00-877798 | Guard - Lower Right | 1 |

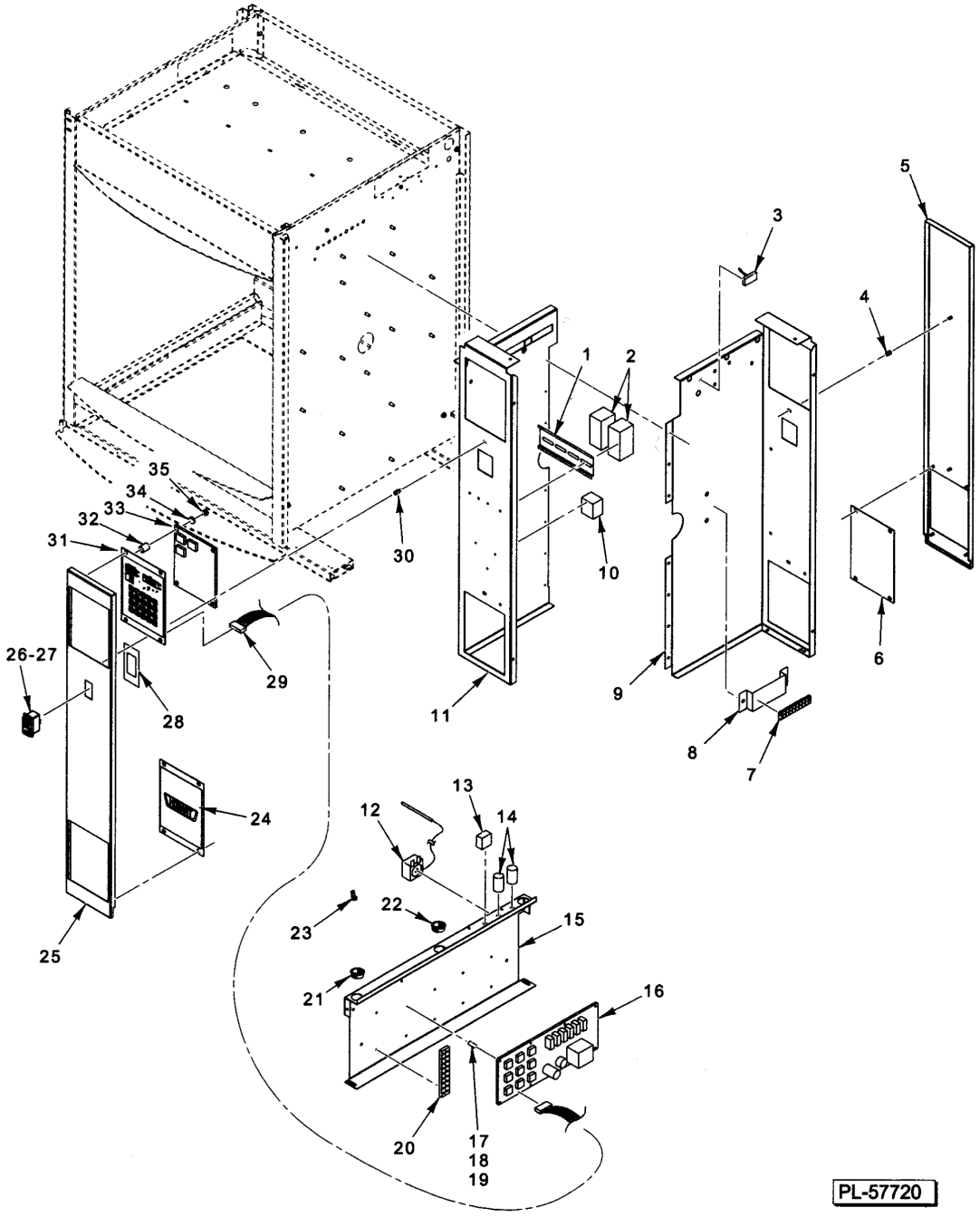


**CONTROLS AND COMPONENTS**

## CONTROLS AND COMPONENTS

## CONTROLS AND COMPONENTS

| ILLUS. PL-57720 | PART NO. | NAME OF PART | AMT. |
|---|---|---|---|
| 1 | 00-877889 | Din Rail | 1 |
| 2 | 00-877888 | Contactor (3-Pole) | 2 |
| 3 | 00-356946 | Sensor - Temperature | 1 |
| 4 | 00-047939 | Standoff | AR |
| 5 | 00-877872 | NLA - Obsolete--Panel - Instrument Assy. (Back) | 1 |
| 6 | 00-891067 | NLA - Obsolete--Panel Assy. (Incls. Logo) | 1 |
| 7 | 00-877917-00001 | Block - Terminal (9-Position) | 1 |
| 8 | 00-877944 | Bracket - Terminal Block | 1 |
| 9 | 00-877854-00002 | Box - Electrical (RH) | 1 |
| 10 | 00-877916-00001 | Block - Power (3-Pole) | 1 |
| 11 | 00-877854-00001 | Box - Electrical (LH) | 1 |
| 12 | 00-360145 | Thermostat (High Limit) | 1 |
| 13 | 00-877887 | Capacitor (2.3 uf) (Rotor Motor) | 1 |
| 14 | 00-877885 | Capacitor (1.5 uf) (Blower Motor) | 2 |
| 15 | 00-425900-00105 | Plate - Mounting | 1 |
| 16 | 00-877881 | Controller (CPU) | 1 |
| 17 | 00-042808 | Support - Circuit Board | 6 |
| 18 | 00-877989 | Support - Dual Locking (PCB) | 6 |
| 19 | 00-877993 | Standoff - PCB | 2 |
| 20 | 00-877950 | Block - Terminal (9-Position) | 1 |
| 21 | PB-005-22 | Plug - Button 1 1/4(32 mm) | 1 |
| 22 | PB-005-23 | Plug - Button 1 1/2(38 mm) | 1 |
| 23 | FE-023-88 | Lug - Ground | 1 |
| 24 | 00-891067 | NLA - Obsolete--Panel Assy. (Incls. Logo) | 1 |
| 25 | 00-877871 | Panel - Instrument Assy. (Front) | 1 |
| 26 | 00-877913-00001 | Switch - Power | 1 |
| 27 | 00-877913-00002 | Bezel - Power Switch | 1 |
| 28 | 00-877938 | Spacer - Power Switch | 1 |
| 29 | 00-877884 | Cable - Ribbon | 1 |
| 30 | 00-047939 | Standoff | AR |
| 31 | 00-891066 | Panel - Membrane Keypad Assy | 1 |
| 32 | 00-877966 | Standoff | 4 |
| 33 | 00-877882 | Controller - Display | 1 |
| 34 | WL-013-05 | Lockwasher #6 Internal | 4 |
| 35 | NS-011-07 | Nut 6-32 Hex (SST) | 4 |
| | 00-877868 | Nut - Tinnerman | AR |
| | 00-042287 | Clamp - Cable | 1 |
| | 00-877994 | Tie - Screw Mount | AR |
| | 00-877945 | Holder - Flat Tie | AR |
| | 00-877902 | Harness - Contactor | 1 |
| | 00-877903 | Harness - CPU | 1 |

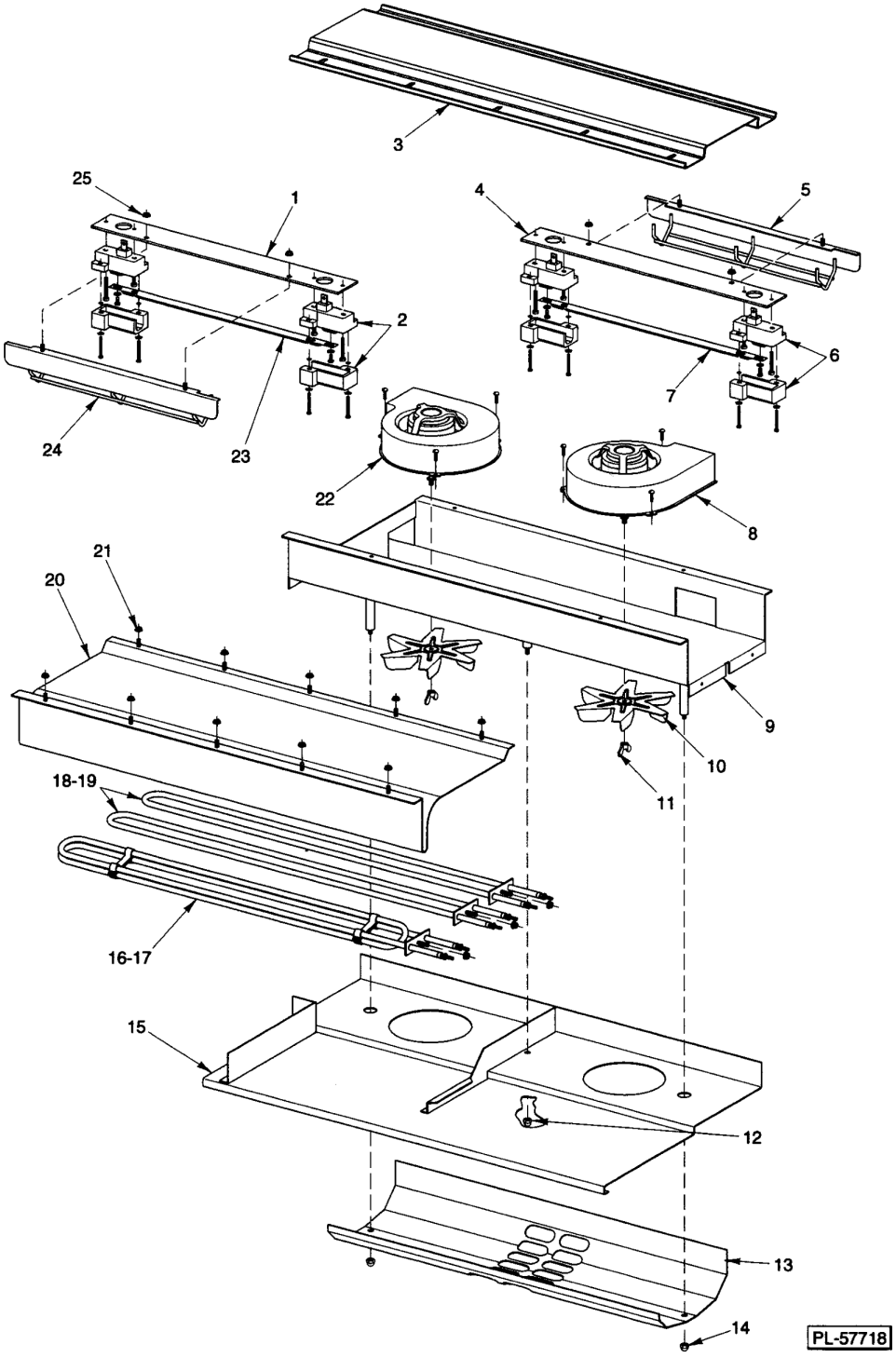


**HEATING AND VENTING**

## HEATING AND VENTING

## HEATING AND VENTING

| ILLUS. PL-57718 | PART NO. | NAME OF PART | AMT. |
|---|---|---|---|
| 1 | 00-359460-00066 | Strip - Lamp Holder Mounting | 1 |
| 2 | 00-360854 | Holder - Quartz Lamp Cap & Base | 2 |
| 3 | 00-877799 | Cover - Heater Insulation | 1 |
| 4 | 00-359460-00066 | Strip - Lamp Holder Mounting | 1 |
| 5 | 00-891065 | Kit - Lamp Guard Assy | 1 |
| 6 | 00-360854 | Holder - Quartz Lamp Cap & Base | 2 |
| 7 | 00-360155 | Lamp - Quartz | 1 |
| 8 | 00-359460-00025 | Blower (With Fan Blade) | 1 |
| 9 | 00-425900-00038 | Vent - Chassis Assy | 1 |
| 10 | 00-360127-00002 | Fan Blade | 2 |
| 11 | 00-422905-00108 | Nut (LH Thread) | 2 |
| 12 | NS-025-04 | Crown Nut | 1 |
| 13 | 00-359460-00017 | Plate - Air Deflector | 1 |
| 14 | NS-025-04 | Crown Nut | 2 |
| 15 | 00-359460-00022 | Plate - Ventilating | 1 |
| 16 | 00-359460-00046 | Element - Heating (208 V., 3100 Watts) | 1 |
| 17 | 00-359460-00047 | Element - Heating (240 V., 3100 Watts) | 1 |
| 18 | 00-356894 | Element - Heating (208 V., 2100 Watts) | 2 |
| 19 | 00-357813 | Element - Heating (240 V., 2100 Watts) | 2 |
| 20 | 00-877875 | Shield - Heat Assy | 1 |
| 21 | NS-038-13 | Lock Nut 10-24 Hex | 10 |
| 22 | 00-359460-00025 | Blower (With Fan Blade) | 1 |
| 23 | 00-360155 | Lamp - Quartz | 1 |
| 24 | 00-891065 | Kit - Lamp Guard Assy | 1 |
| 25 | NS-038-13 | Lock Nut 10-24 Hex | 2 |

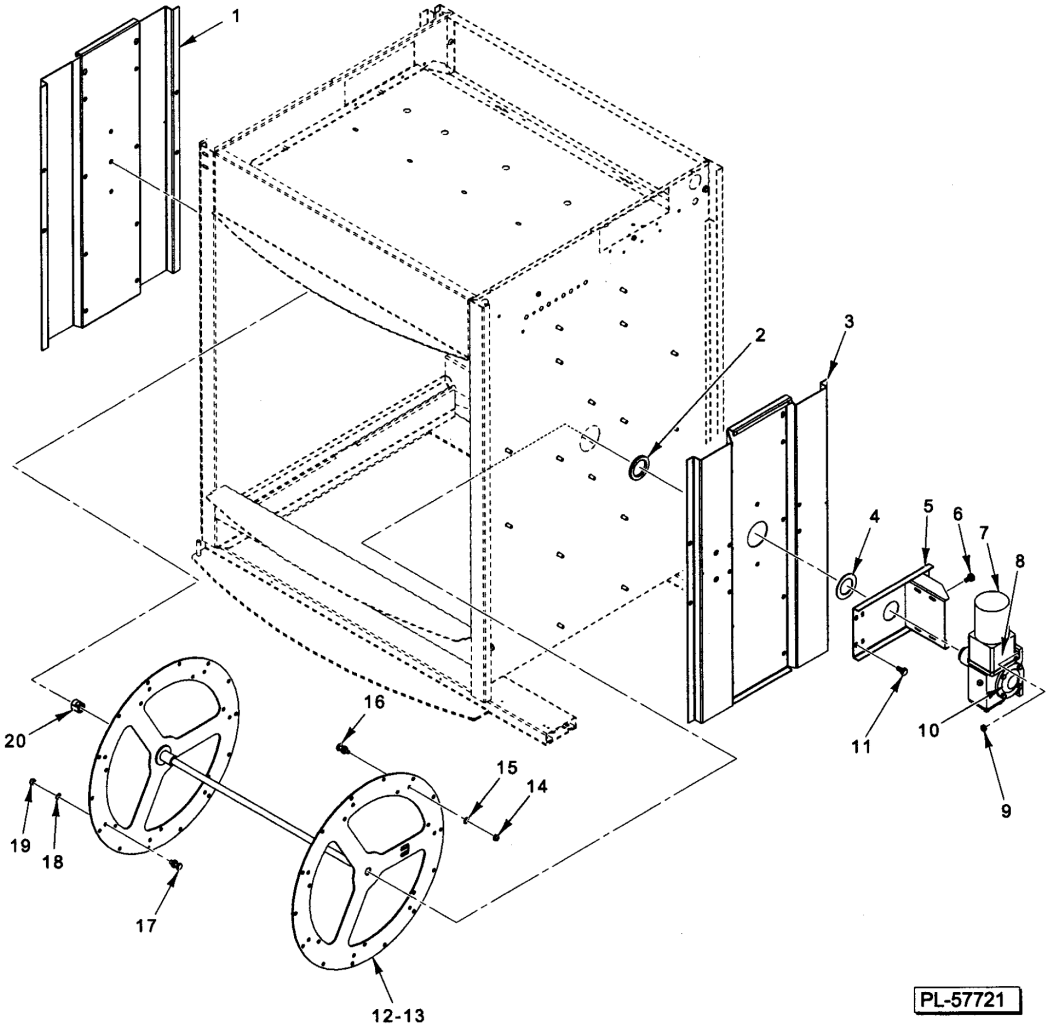


**ROTISSERIE AND DRIVE MOTOR**

## ROTISSERIE AND DRIVE MOTOR

## ROTISSERIE AND DRIVE MOTOR

| ILLUS. PL-57721 | PART NO. | NAME OF PART | AMT. |
|---|---|---|---|
| 1 | 00-877790 | Plate - Support (Pivot Side) | 1 |
| 2 | 00-877941 | Seal - Ring | 1 |
| 3 | 00-877789 | Plate - Support (Motor Side) | 1 |
| 4 | 00-359460-00049 | Seal - Outside Motor Shaft | 1 |
| 5 | 00-877920 | Bracket - Motor Assy | 1 |
| 6 | SC-117-91 | Cap Screw 1/4-20 x 1 Hex Hd | 4 |
| 7 | 00-891061 | Drive Motor (W/Cap) | 1 |
| 8 | 00-891060 | Gear Speed Reducer | 1 |
| 9 | NS-038-04 | Lock Nut 1/4-20 Hex | 4 |
| 10 | 00-891062 | Gearbox Drive Arm | 1 |
| 11 | SC-121-61 | Mach. Screw 1/4-20 x 5/8 Hex Washer Hd | 4 |
| 12 | 00-877923-00001 | Disc - Rotor Assy. (Incls. Items 14 thru 19) (SST) | 1 |
| 13 | 00-877923-00002 | Disc - Rotor Assy. (Incls. Items 14 thru 20) (Coated) | 1 |
| 14 | NS-015-11 | Nut 5/16-18 Hex (SST) | 7 |
| 15 | SL-005-09 | Spring - Loading | 7 |
| 16 | 00-877940 | Pin - Support | 7 |
| 17 | 00-877940 | Pin - Support | 7 |
| 18 | SL-005-09 | Spring - Loading | 7 |
| 19 | NS-015-11 | Nut 5/16-18 Hex (SST) | 7 |
| 20 | 00-877988 | Support - Bearing | 1 |
| | SC-062-59 | Screw - Mach. 5/16 - 18 X 5/8 (Used with Item 20) | 1 |
| | WL-008-22 | Lockwasher 5/16 Internal | AR |

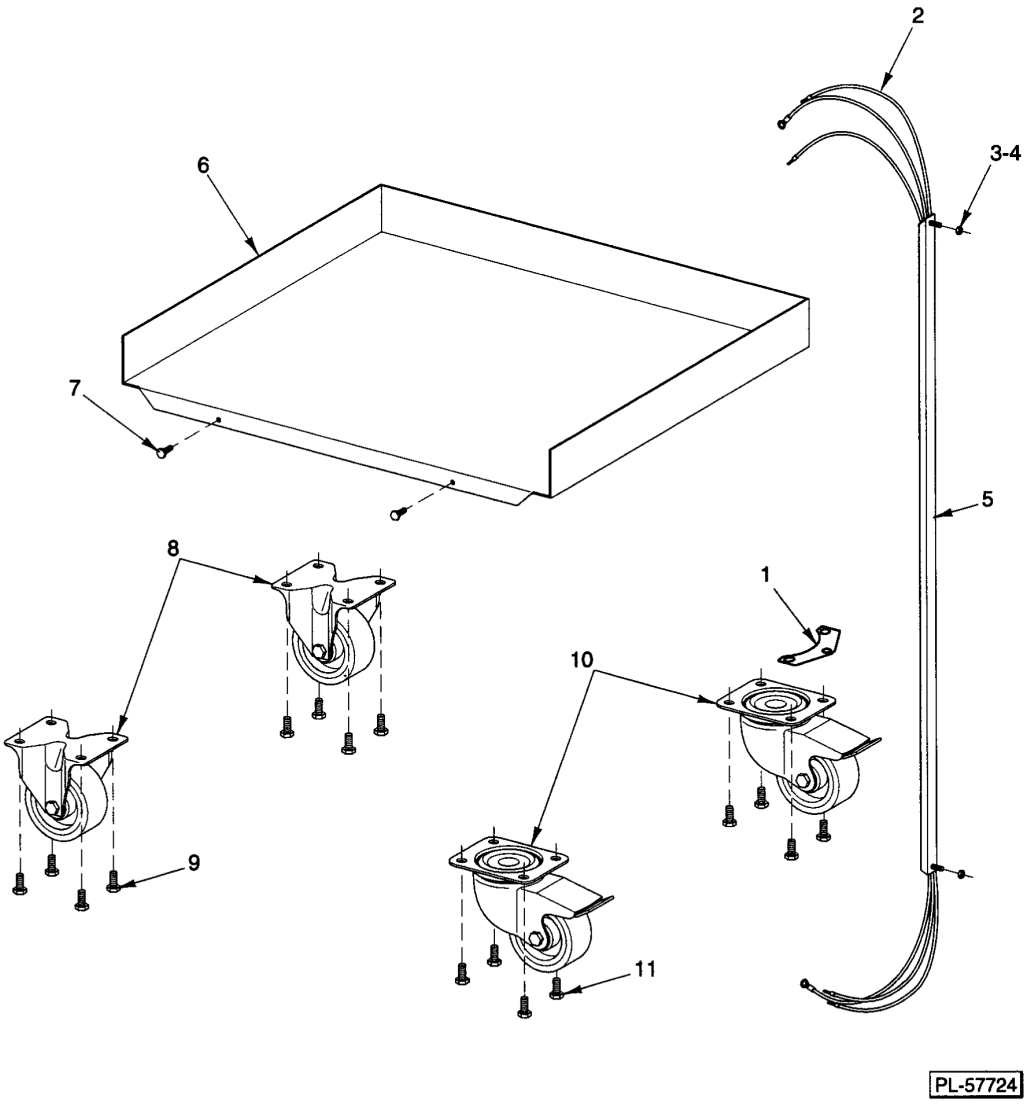


**STACKING KIT**

**STACKING KIT**

## STACKING KIT

| ILLUS. PL-57724 | PART NO. | NAME OF PART | AMT. |
|---|---|---|---|
| 1 | 00-877968 | NLA - Obsolete--Bracket - Tether | 1 |
| 2 | 00-877985 | Harness - Stacking Kit | 1 |
| 3 | WS-005-42 | Washer | 2 |
| 4 | NS-038-13 | Lock Nut 10-24 Hex | 2 |
| 5 | 00-877972 | NLA - Obsolete--Guide - Wire Assy | 1 |
| 6 | 00-877970 | Protector - Fat | 1 |
| 7 | SD-039-33 | Self-Tapping Screw | 2 |
| 8 | 00-891071 | Caster - Rigid | 2 |
| 9 | SC-117-92 | Cap Screw 5/16-18 x 3/4 Hex Hd | 8 |
| 10 | 00-891072 | Caster - W/Brake | 2 |
| 11 | SC-117-92 | Cap Screw 5/16-18 x 3/4 Hex Hd | 8 |
| | SC-110-39 | Mach. Screw 10-24 x 7/8 Hex Hd | 4 |
| | WS-019-10 | Washer (SST) | 4 |
| | NS-038-13 | Lock Nut 10-24 Hex | 4 |
| | 00-877892-00002 | Plate - Conduit Mounting (Stack Kit) | 1 |
| | 00-515194-00002 | Sealer (RTU) (Alum.) | 1 |

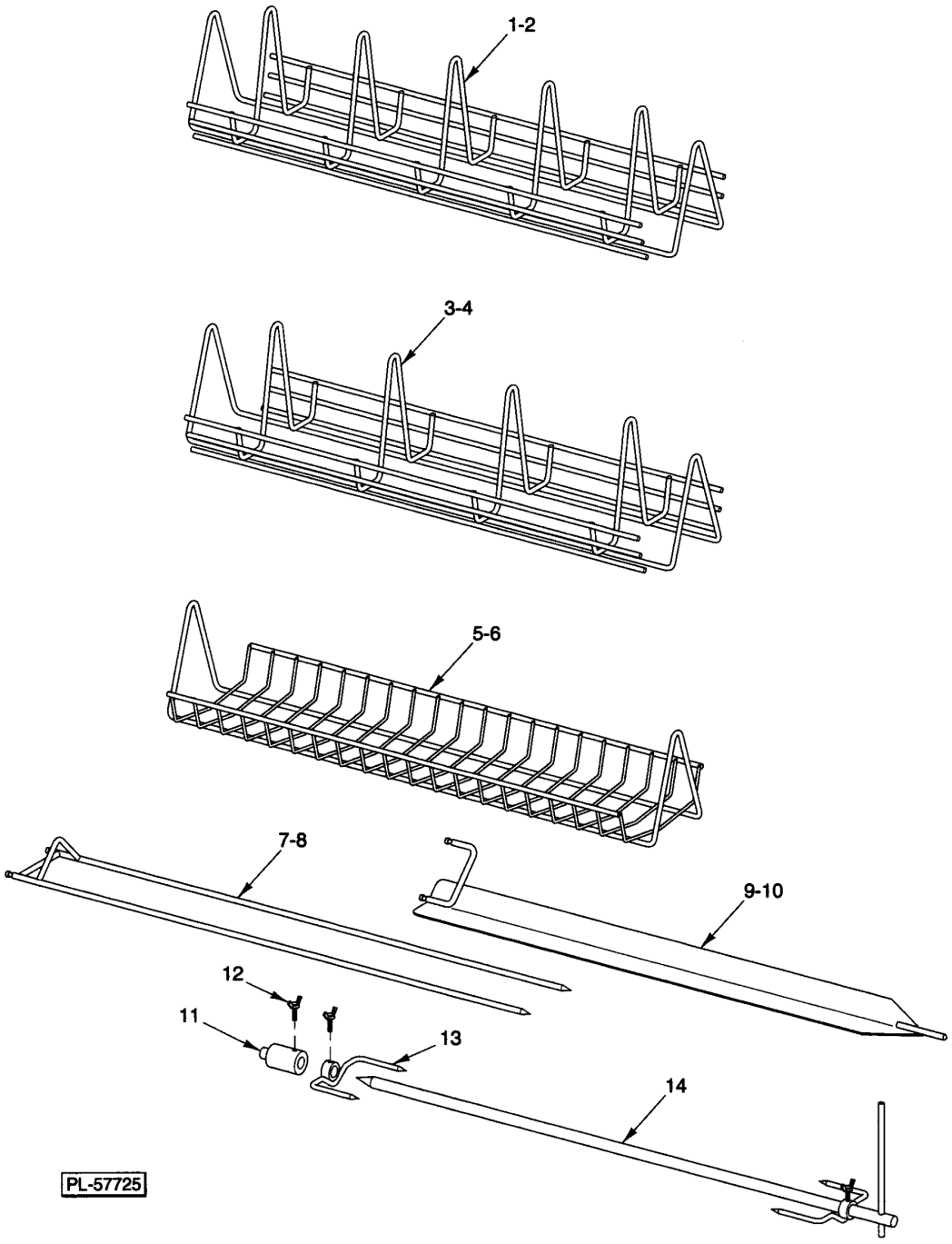


**ACCESSORIES**

## ACCESSORIES

## ACCESSORIES

| ILLUS. PL-57725 | PART NO. | NAME OF PART | AMT. |
|---|---|---|---|
| 1 | 00-425900-00277 | Rack - Chicken (W/O Pins) (5 Position) | 1 |
| 2 | 00-425900-00238 | Rack - Chicken (W/O Pins) (5 Position) (Coated) | 1 |
| 3 | 00-425900-00278 | Rack - Chicken (W/O Pins) (4 Position) | 1 |
| 4 | 00-425900-00239 | Rack - Chicken (W/O Pins) (4 Position) (Coated) | 1 |
| 5 | 00-425900-00276 | Basket - Meat (W/O Pins) | 1 |
| 6 | 00-425900-00237 | Basket - Meat (W/O Pins) (Coated) | 1 |
| 7 | 00-425900-00317 | Fork - Meat | 7 |
| 8 | 00-425900-00318 | Fork - Meat (Coated) | 7 |
| 9 | 00-359580 | Spit - V | 1 |
| 10 | 00-425900-00236 | Spit - V (Coated) | 1 |
| 11 | 00-360386 | Sleeve - Spit | 1 |
| 12 | 00-360297 | NLA - Obsolete--Screw - Wing (M5) | AR |
| 13 | 00-360387 | Fork - Spit | 2 |
| 14 | 00-425900-00255 | Shaft - Spit | 1 |
| | 00-425774-00032 | Spit - Turkey Assy. (Incls. Items 11 thru 14) | 1 |
| | 00-357553-00158 | Saltshaker | 1 |
| | 00-357553-00159 | Gloves (Set of 2) | 1 |