HOBART

CATALOG OF REPLACEMENT PARTS

HRO SERIES
Rotary Ovens & Warmer

HRO303	ML-43776
HRO505	ML-43778
HRW303	ML-43779

A product of HOBART CORPORATION 701 RIDGE AVENUE TROY, OHIO 45374-0001

FORM 18526 (11-92)

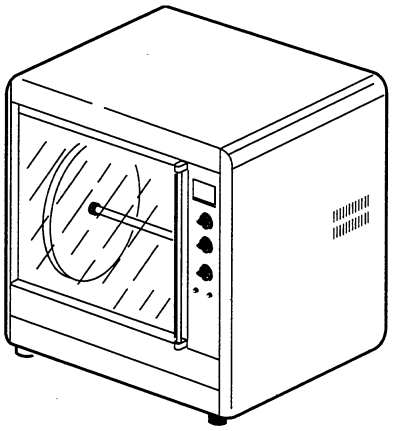

HRO303

HRO303
HRO303 = HRO505

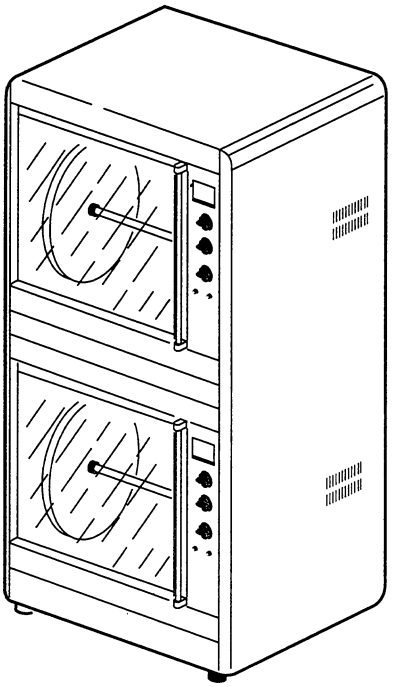

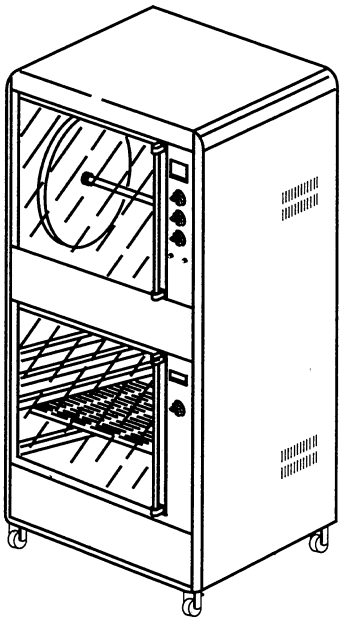

HRO303
WARMER = HRW303

PL-50948

©HOBART CORPORATION, 1992

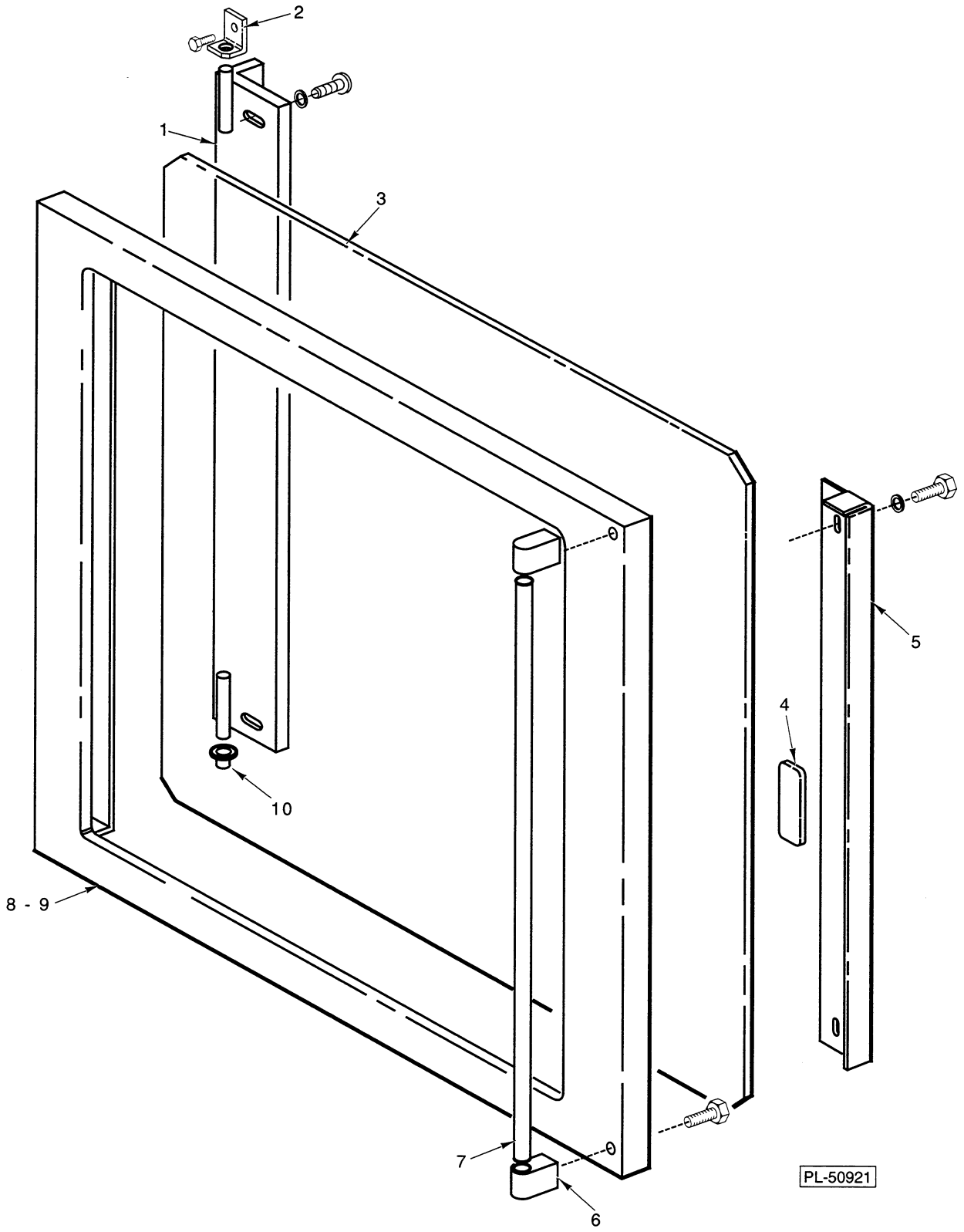

DOOR

DOOR

ILLUS. PL-50921	PART NO.	NAME OF PART	AMT.
1	356855	Cover - Door Glass Profile	1
2	356940	Bracket - Hinge Door	1
3	360197	Glass - Door	1
4	356850	Magnet - Door	11
5	356856	Holder - Magnet (Warmer)	1
6	356851	Cap - Handle End	2
7	356913	Handle	1
8	356911	Holder - Glass Door (Operator's Side)	1
9	356914	Holder - Glass Door (Customer's Side)	1
10	357114	Bushing - Door	1

* Note: Quantities Listed Are For One Door Only.

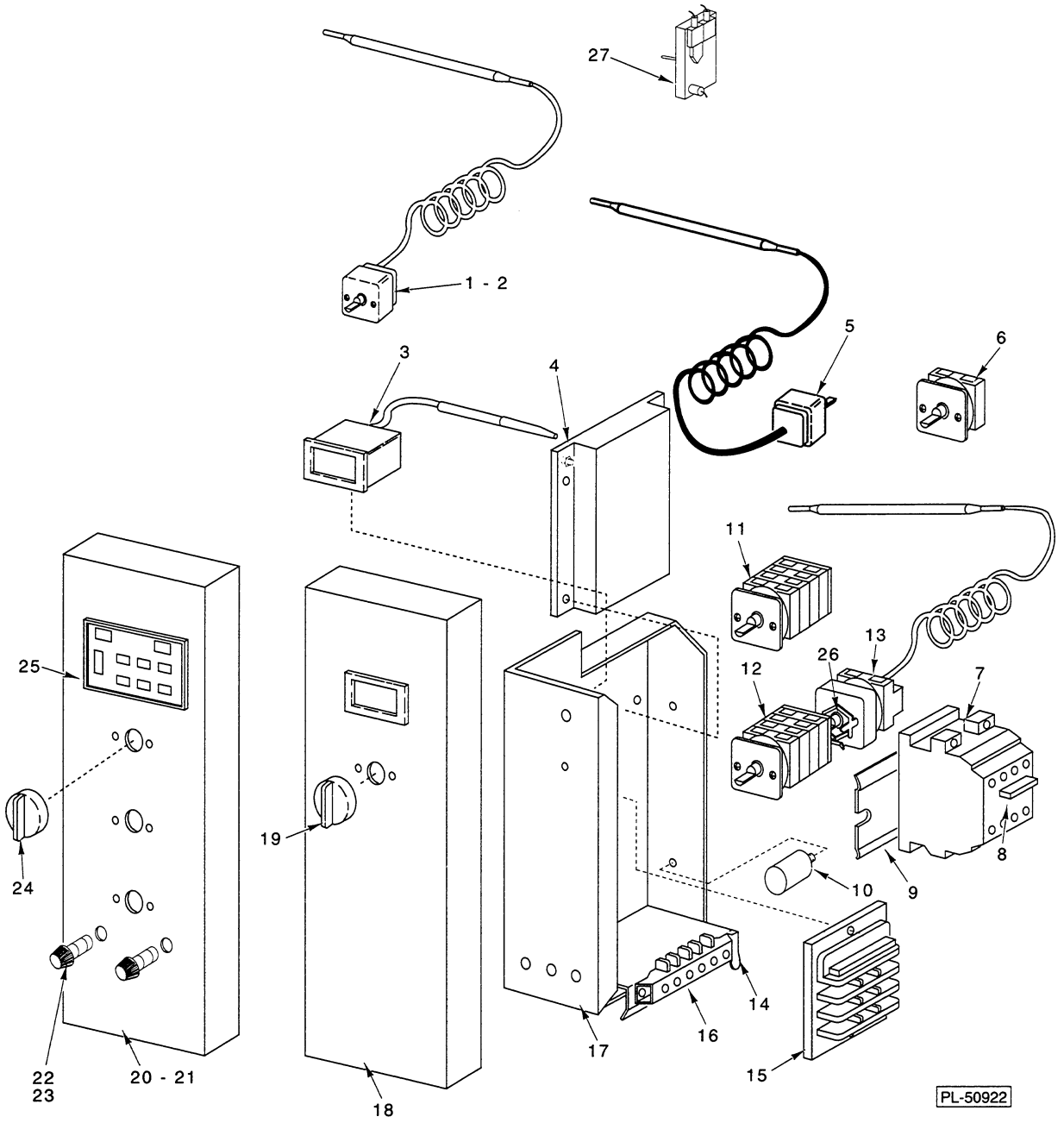

CONTROL PANEL

CONTROL PANEL

ILLUS. PL-50922	PART NO.	NAME OF PART	AMT.
1	360145	Thermostat (Oven)	1
2	360281	Clip - Thermostat	AR
3	360036	Thermometer (Warmer)	1
4	356939	Control - Clock	1
5	360145	Thermostat High-Limit (Oven)	1
6	356830	Switch - Rotary (Oven)	1
7	356941	Switch - Magnet	1
8	356938	RC Unit	1
9	356842	Bracket - Terminal Black Mounting	1
10	360201	Capacitor	1
11	356839	Switch - Main (On/Off)(Oven)	1
12	356878	Switch - Rotary (Warmer)	1
13	357196	Thermostat (Warmer)	1
14	360280	Plate - Ground	1
15	356841	Block - Terminal	1
16	356857	Block - Terminal	1
17	356829	Panel - Electrical Component	1
18	356922	Control Panel Assy. (HRW 303)	1
19	356833	Knob - Switch (Warmer)	1
20	356884	Control Panel Assy. (HRO 303)	1
21	356933	Control Panel Assy. (HRO 505)	1
22	356840	Holder - Fuse	2
23	356845	Fuse	2
24	356833	Knob - Switch	3
25	356843	Clock - Digital (Display)	1
26	356947	Bracket - Thermostat & Switch	1
27	356946	Sensor - Temperature (Oven)	1
	356835	Cord & Plug (Not Shown)	1

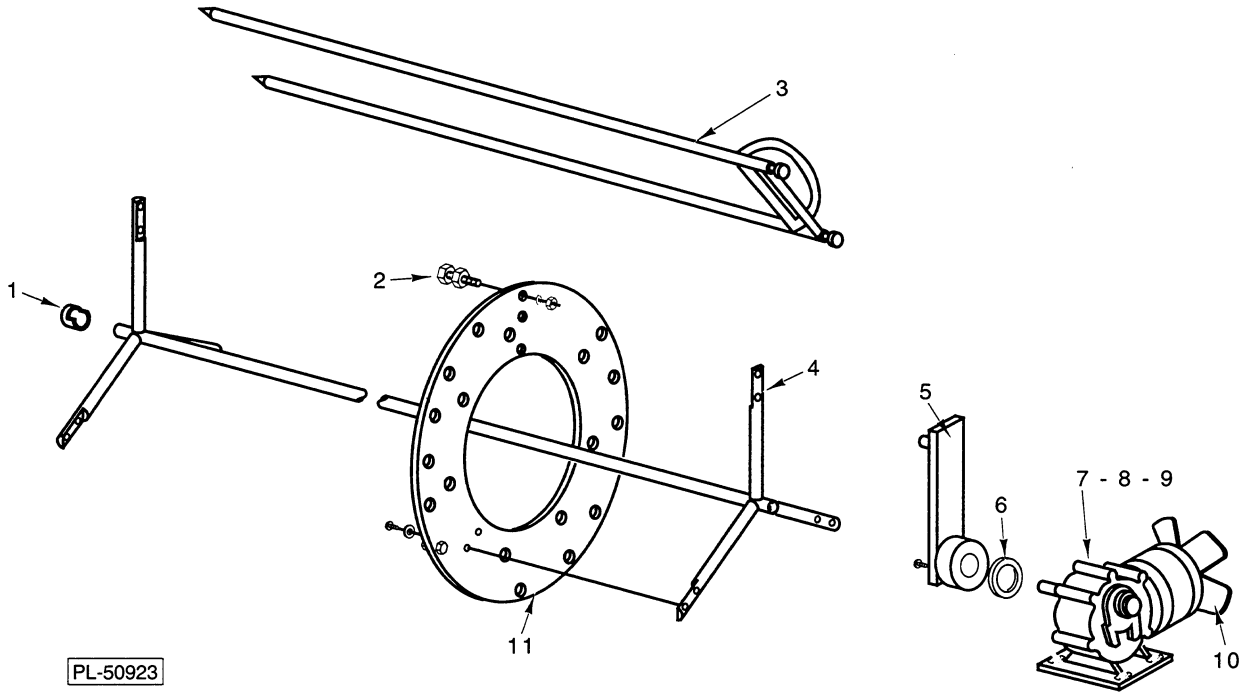

ROTISSERIE

ROTISSERIE

ILLUS. PL-50923	PART NO.	NAME OF PART	AMT.
1	360192	Bearing - Bronze	1
2	360202	Pin - Support	AR
3	360235	Fork - Meat	AR
4	360195	Shaft - Rotor	1
5	356953	Carrier	1
6	360137	Seal - Ring	1
7	360196	Motor - Drive	1
8	360131	Bearing - Drive	1
9	356909	Shield - Motor	1
10	360248	Blade - Fan	1
11	360194	Disc - Rotor	2

* Note: Quantities listed Are For One Oven only.

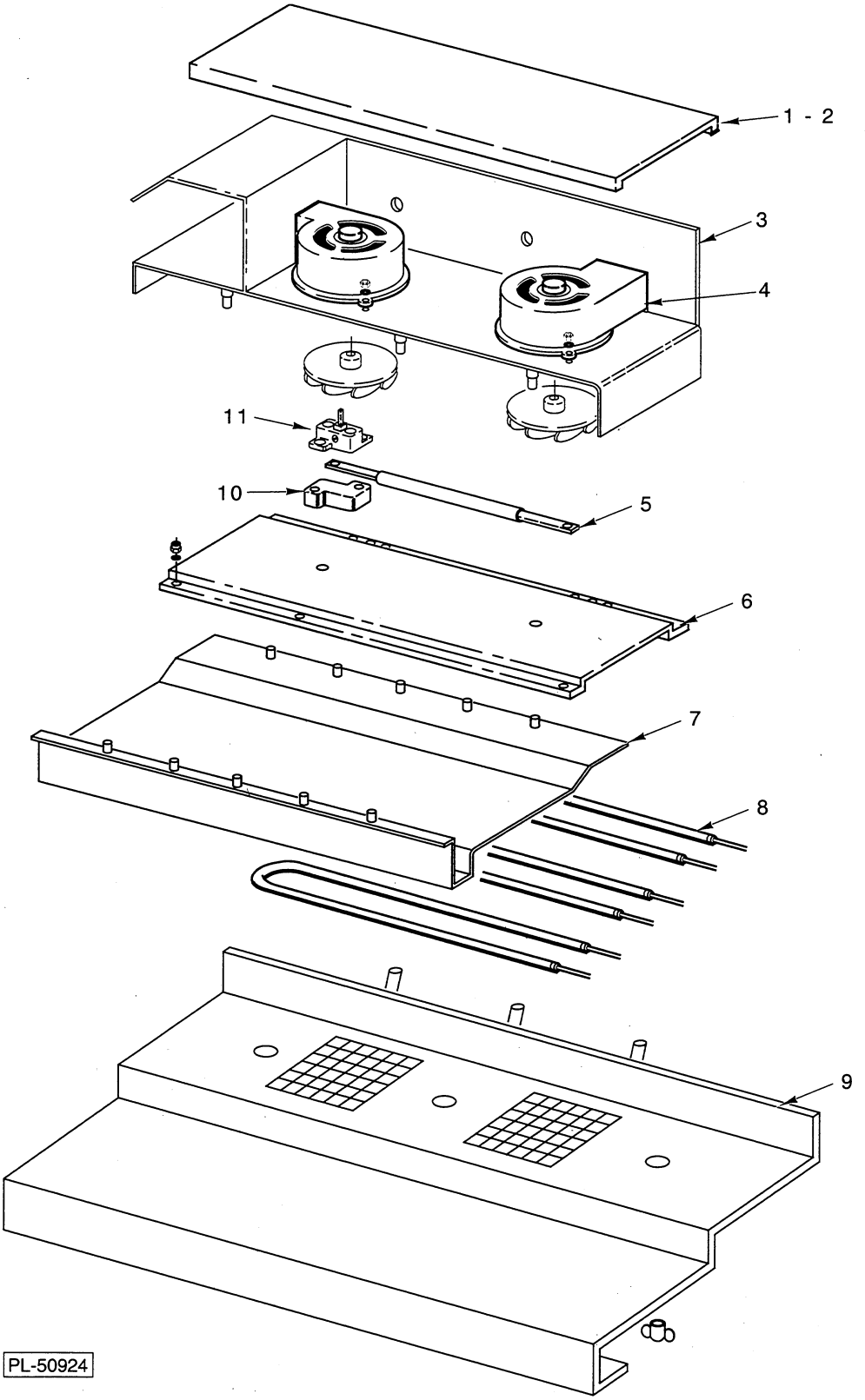

BLOWER

BLOWER

ILLUS. PL-50924	PART NO.	NAME OF PART	AMT.
1	356906	Plate - Fan Mounting	1
2	360238	Clip - Speed	AR
3	356895	Plate - Ventilator Mounting	1
4	360127	Blower (W/Fan Blade)	2
5	360155	Lamp - Quartz	2
6	356891	Plate - Ventilating	1
7	356893	Plate - Heater Element Mounting	1
8	356894	Element - Heating	3
9	356902	Plate - Lamp Holder W/ Air Slots	1
10	360156	Holder - Quartz Lamp Cap	4
11	360129	Holder - Quartz Lamp Base	4

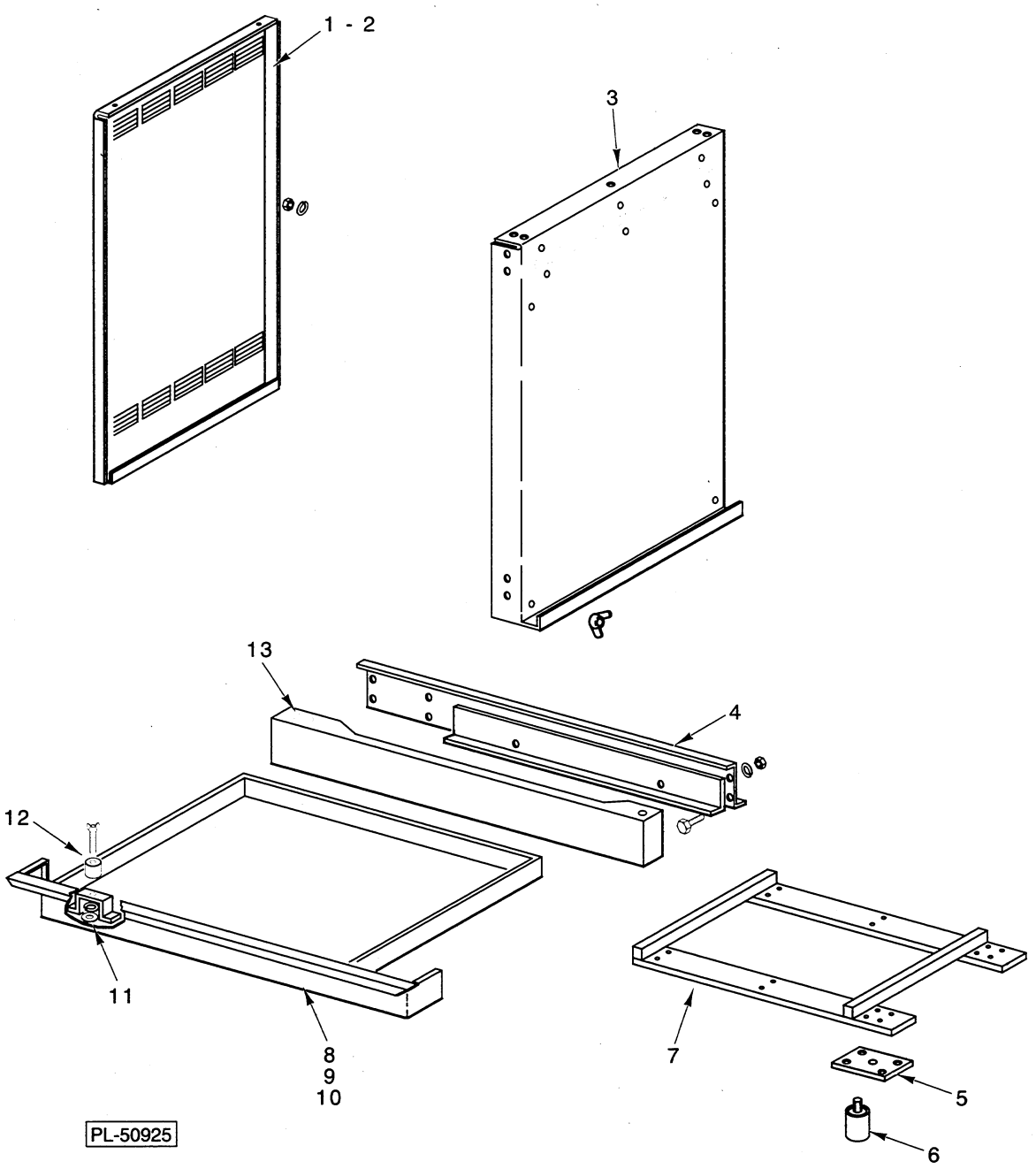

OVEN (L.H. SIDE)

OVEN (L.H. SIDE)

ILLUS. PL-50925	PART NO.	NAME OF PART	AMT.
1	356889	Panel - Outer (L.H.)(HRO 303)	1
2	356924	Panel Outer (L.H.)(HRO 505/HRW 303)	1
3	356896	Panel - Inner Oven Side (L.H.)	1
4	356899	Reinforcement - Operator's Side	1
5	356904	Plate - Foot Mounting	4
6	360037	Foot	4
7	356905	Frame - Base	1
8	356915	Drawer - Water (Lower)(HRW 303)	1
9	356886	Drawer - Grease (HRO 303)(Lower HRO 505)	1
10	356934	Drawer - Upper (HRO 505)	1
11	360206	Gasket - Drain	1
12	360205	Gasket - Seat	1
13	356885	Panel - Lower Front (Operator's Side)	2

* Note: Quantities Listed Are For One Oven Only

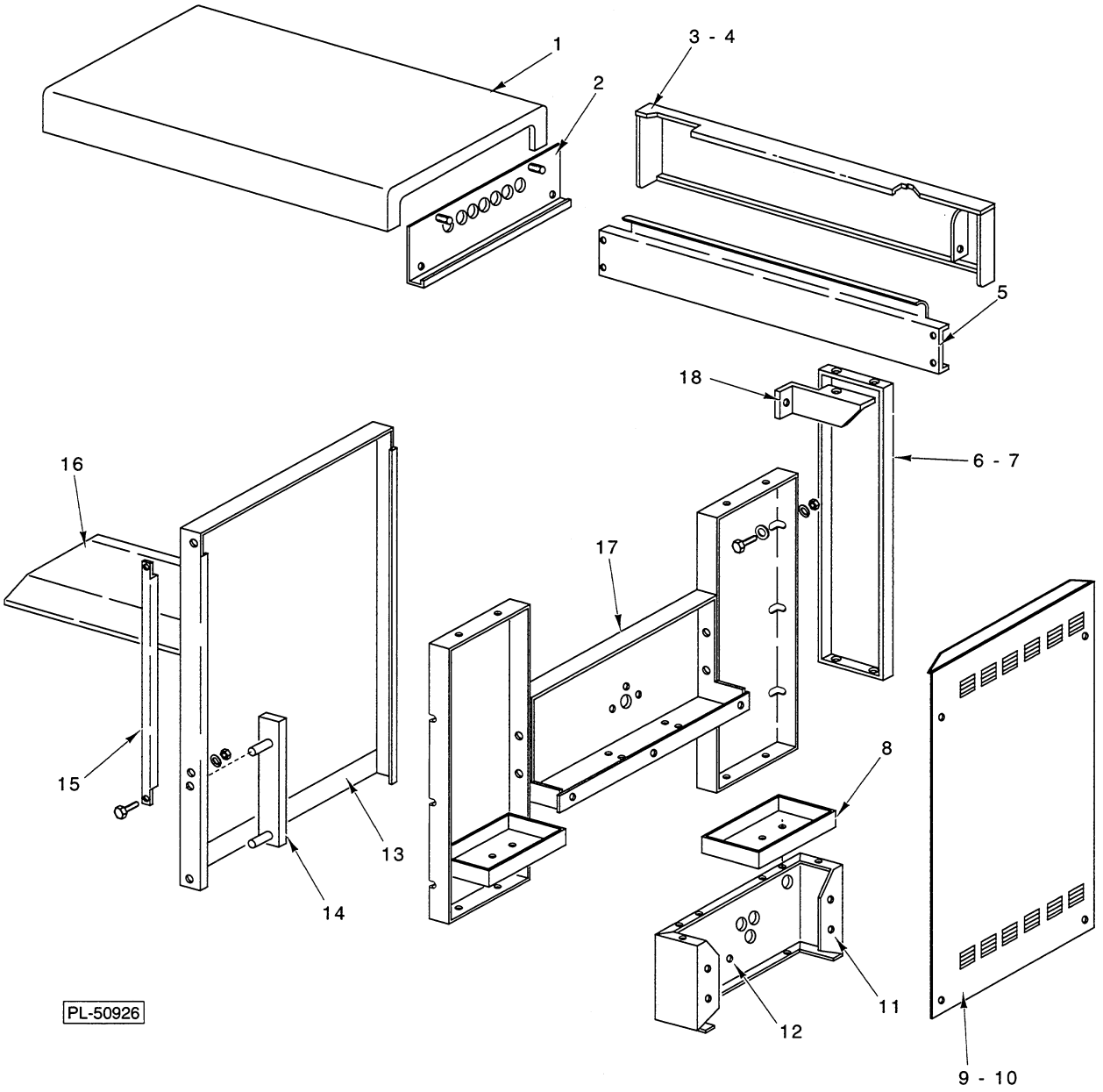

OVEN (R.H. SIDE)

OVEN (R.H. SIDE)

ILLUS. PL-50926	PART NO.	NAME OF PART	AMT.
1	356910	Top Assy.	1
2	356950	Reinforcement - Side Panel	1
3	356887	Panel - Lower Front (Customer's Side)(HRO 303)	1
4	356916	Panel - Lower Front (Customer's Side)(HRO 505/HRW 303)	AR
5	356900	Reinforcement (Customer's Side)	1
6	356908	Panel - Customer Side (HOBART)	1
7	356869	Panel Customer's Side	1
8	356931	Tray - Spark (HRW 303)	2
9	356888	Panel - Outer (R.H.)(HRO 303)	1
10	356925	Panel - Outer (R.H.)(HRO 505/HRW 303)	1
11	356901	Plate - Main Mounting	1
12	360143	Bushing	1
13	356897	Panel - Inner Oven Side (R.H.)	1
14	356958	Strip - Front Mtg. (HRW 303)	4
15	356907	Strip - Magnet Activator	1
16	356903	Plate - Bottom	2
17	356898	Plate - Motor Mount	1
18	356951	Bracket	1
	360209	Clip - Insulation (Not Shown)	AR

* Note: Quantities Listed Are For One Oven only.

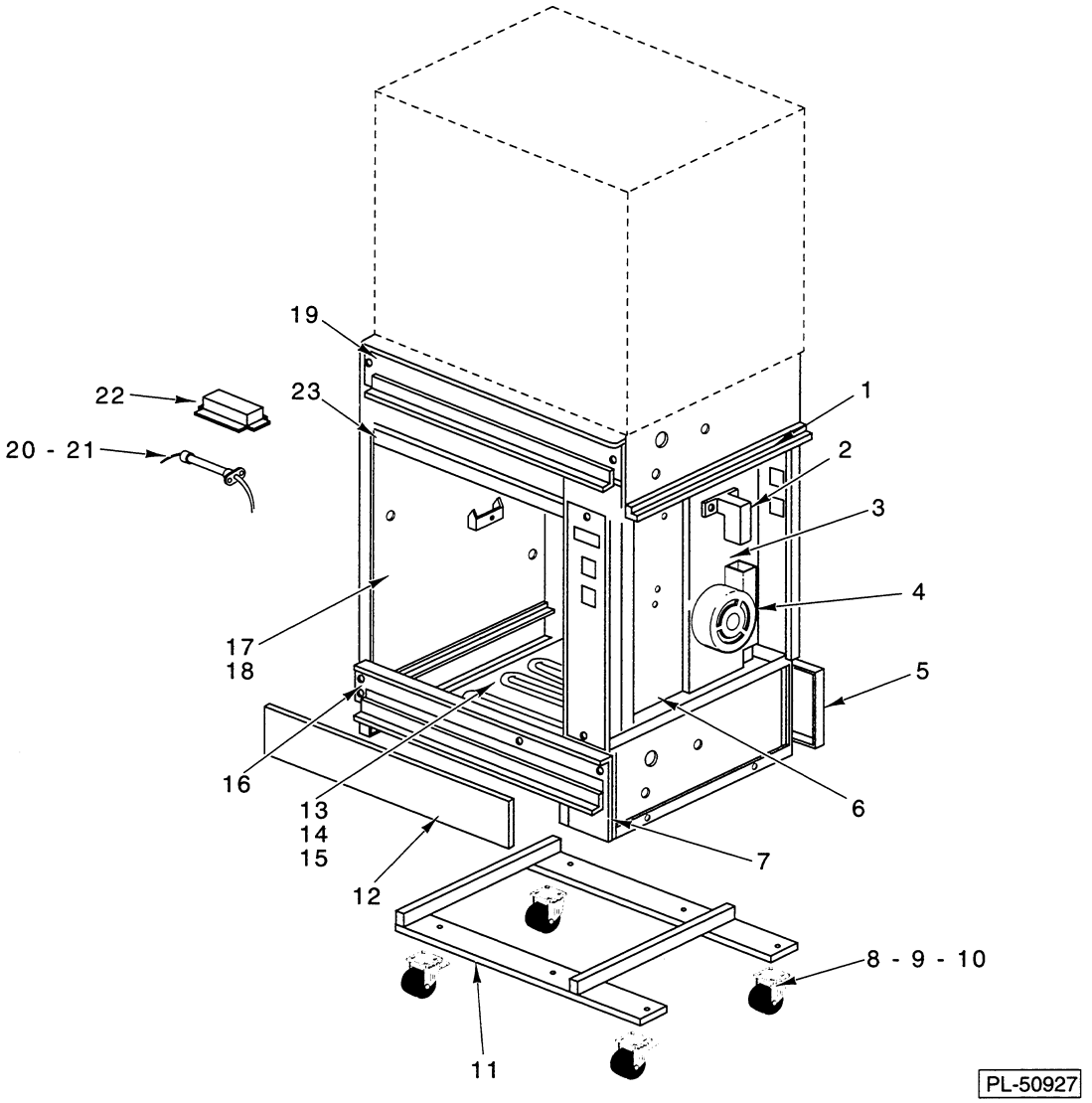

FRAME

FRAME

ILLUS. PL-50927	PART NO.	NAME OF PART	AMT.
1	356944	Plate - Mounting	1
2	356957	Guide - Air	1
3	356927	Plate - Fan Mounting	1
4	360127	Blower (W/Fan Blade)	1
5	356921	Reinforcement - Lower (Customer's Side)	1
6	356952	Plate - Reinforcement	1
7	356960	Plate - Connecting	1
8	360245	Caster W/O Lock (HRO 505/HRW 303)	2
9	360244	Caster W/Lock (HRO 505/HRW 303)	2
10	356876	Spacer (HRO 505/HRW 303)	4
11	356905	Frame - Base	1
12	356954	Plate - Reinforcement	1
13	360241	Element - Heater	2
14	360066	Gasket	4
15	356932	Shield - Heating Element	1
16	356920	Reinforcement - Lower Operator's Side	1
17	356919	Inner Warmer Side Assy. (L.H.)	1
18	356918	Inner Warmer Side Assy. (R.H.)	1
19	356930	Plate - Intermediate	1
20	360240	Holder - Lamp	2
21	360446	Lamp - Halotherm 200W	1
22	356861	Lamp - Reflector (Halogen)	1
23	356955	Cover - Ceiling	1

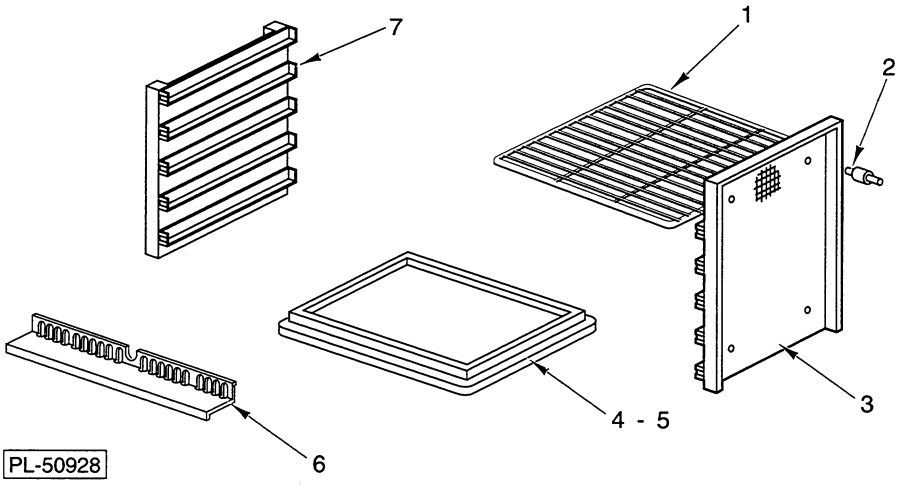

TRAYS & SHELVES (WARMER)

TRAYS & SHELVES (WARMER)

ILLUS. PL-50928	PART NO.	NAME OF PART	AMT.
1	356929	Rack - Stainless Steel Wire	3
2	360136	Spacer - Fan Guard	4
3	356928	Fan Cover Warmer Assy.	1
4	360242	Tray - Gastronome	1
5	360296	Rod - Support	3
6	356926	Plate - Air Guide	2
7	356967	Rack - Slide Assy.	1

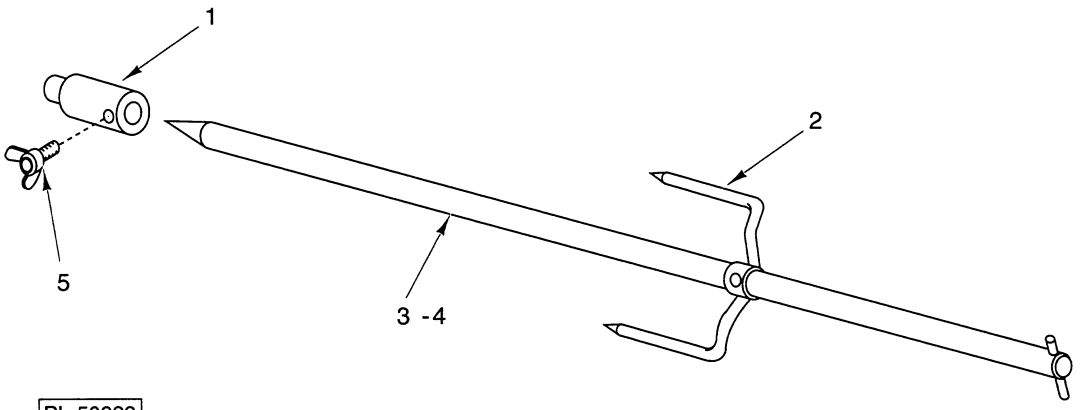

PL-50929

ACCESSORIES

ILLUS. PL-50929	PART NO.	NAME OF PART	AMT.
1	360386	Sleeve - Spit	1
2	360387	Fork - Spit	AR
3	360388	Shaft - Spit	1
4	360247	Spit - Turkey (Incls. items 1,2,3 & 5)	1
5	360297	Screw - Wing M5	AR
	360154	Basket	1
	360284	Key - Spit	1
	360189	Rack - Chicken	1
	360235	Spit (HRO 303/505)	1