HOBART

CATALOG OF REPLACEMENT PARTS

HRO SERIES
Rotary Ovens & Warmers

HRO330	ML-43869
HRO550	ML-43871
HRW330	ML-43870
HRO330P	ML-43888
HRO550P	ML-43889
HRW330P	ML-43890

A product of HOBART CORPORATION 701 RIDGE AVENUE TROY, OHIO 45374-0001

FORM 19460 (3-96)

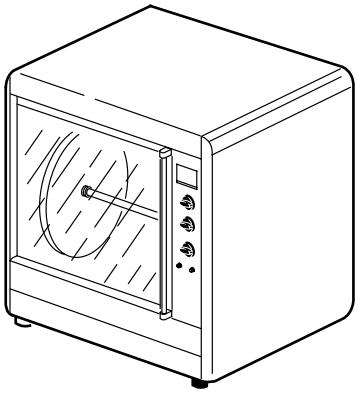

HRO330

HRO330
HRO330 = HRO550

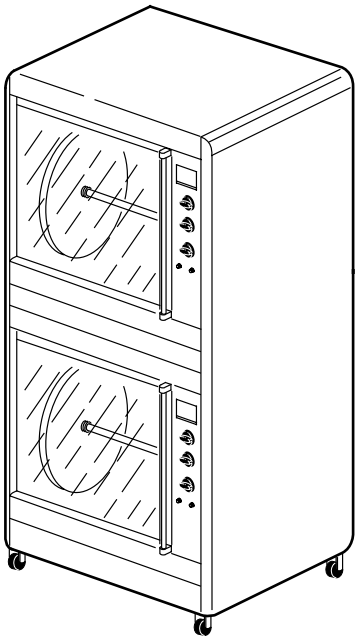

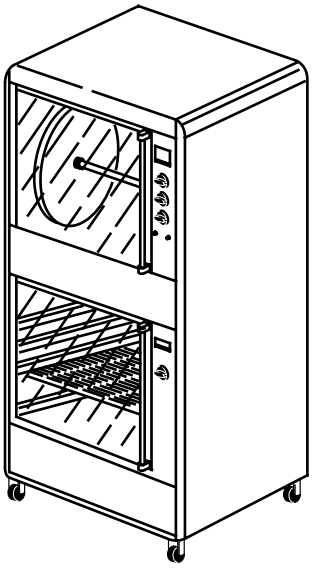

HRO330
WARMER = HRW330

PL-51958

© HOBART CORPORATION, 1992, 1996

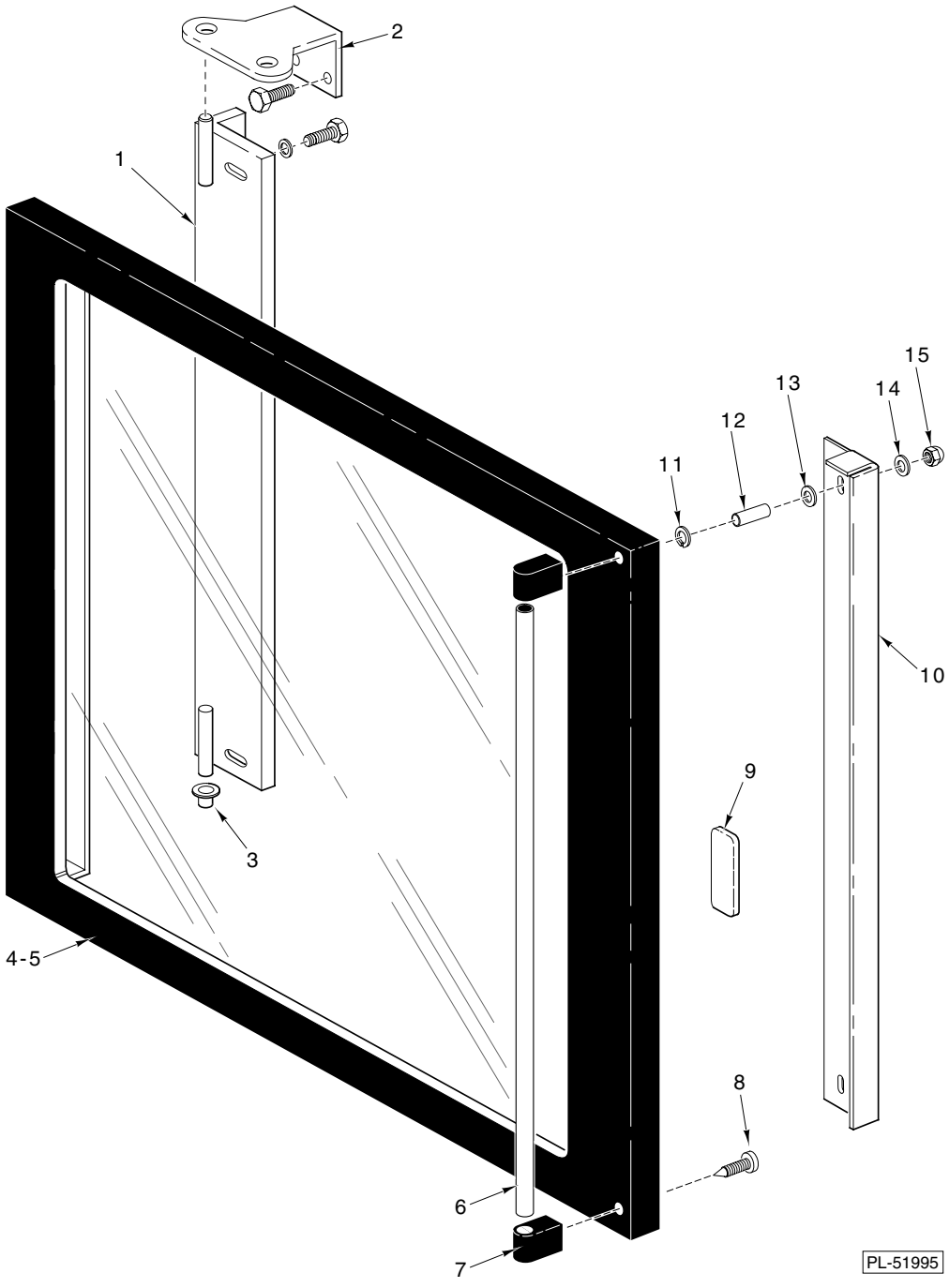

DOOR

DOOR

ILLUS. PL-51995	PART NO.	NAME OF PART	AMT.
1	356855	Cover - Door Glass Profile	1
2	359460-16	Hinge - Support	2
3	357114	Bushing - Door	1
4	356911	Holder - Glass Door (Operator's Side)	1
5	359460-77	Holder - Glass Door (Customer's Side)	1
6	356913	Handle - Door	1
7	356851	Cap - Handle End	2
8	357566	Self- Tapping Screw 4, 8 x 50	2
9	356850	Magnet - Door	4
10	356856	Holder - Magnet (Warmer)	1
11	357553-75	Bushing - Spanner (Trantorque)	4
12	357565	Bushing 5/8	2
13	357568	Toothed Spring Washer M6	2
14	357553-73	Carriage Ring M5 x 15	4
15	358580	Cap Nut M5	4
	359460-74	Glass Door (Standard)(Operator's Side)(Complete)	1
	359460-76	Glass Door (Double Thermal Glass)(Customer's Side)(Complete)	1

* Note: Quantities Listed Are For One Door Only

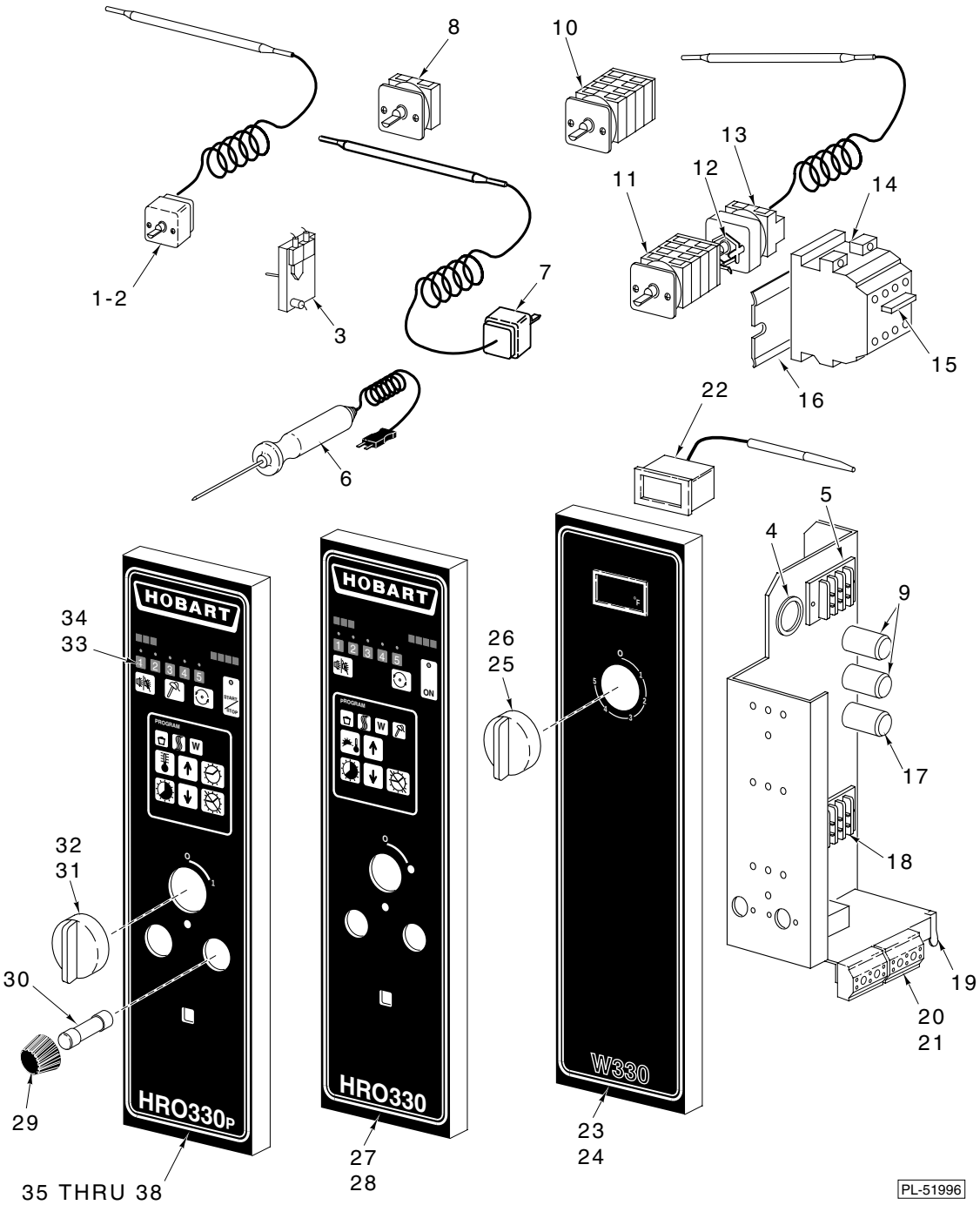

CONTROL PANEL

CONTROL PANEL

ILLUS. PL-51996	PART NO.	NAME OF PART	AMT.
1	360145	Thermostat (Oven)	1
2	360281	Clip - Thermostat	AR
3	356946	Sensor - Temperature (Oven)	1
4	360143	Bushing	1
5	357553-35	Terminal Block (4 Pole)	1
6	359758-12	Meat Probe (HRO330P & HRO550P)	1
7	360145	Thermostat High - Limit (Oven)	1
8	356830	Switch - Rotary (Oven)	1
9	359460-57	Capacitor 1.5 mf	2
10	356839	Switch - Main (On/Off)(Oven)	1
11	356878	Switch - Rotary (Warmer)	1
12	359460-33	Bracket - Thermostat (Oven)	1
13	357196	Thermostat (Warmer)	1
14	356941	Switch - Magnet	1
15	356938	RC Unit	1
16	356842	Bracket - Terminal Block Mounting	1
17	360201	Capacitor	1
18	356841	Block - Terminal	1
19	360280	Plate - Ground	1
20	358712-2	Block - Terminal “4,5,6”	2
21	358713	Screw M4 x 20 (Use with item 20)	2
22	360036	Thermometer (Warmer)	1
23	359460-39	Control Panel Assy. (HRW 330)	1
24	359460-10	Trim - Control Panel	AR
25	356833	Knob - Switch (Warmer)	1
26	359460-48	Ring - Sealing (Use with item 31)	AR
27	359460-23	Control Panel Assy. (HRO 330)	1
28	359460-10	Trim - Control Panel	1
29	356840	Holder - Fuse	2
30	356845	Fuse	2
31	356833	Knob	AR
32	359460-48	Ring - Sealing (Use with item 31)	AR
33	359460-60	Timer - Digital Display	1
34	359460-42	Clip - Timer Display	1
35	359758-3	Control Panel Assy. (HRO330P & HRO550P)	1
36	359460-10	Trim - Control Panel (HRO330P & HRO550P)	1
37	359758-13	Circuit Board (Display)(HRO330P & HRO550P)	1
38	359758-11	Receptacle - Meat Probe (HRO330P & HRO550P)	1

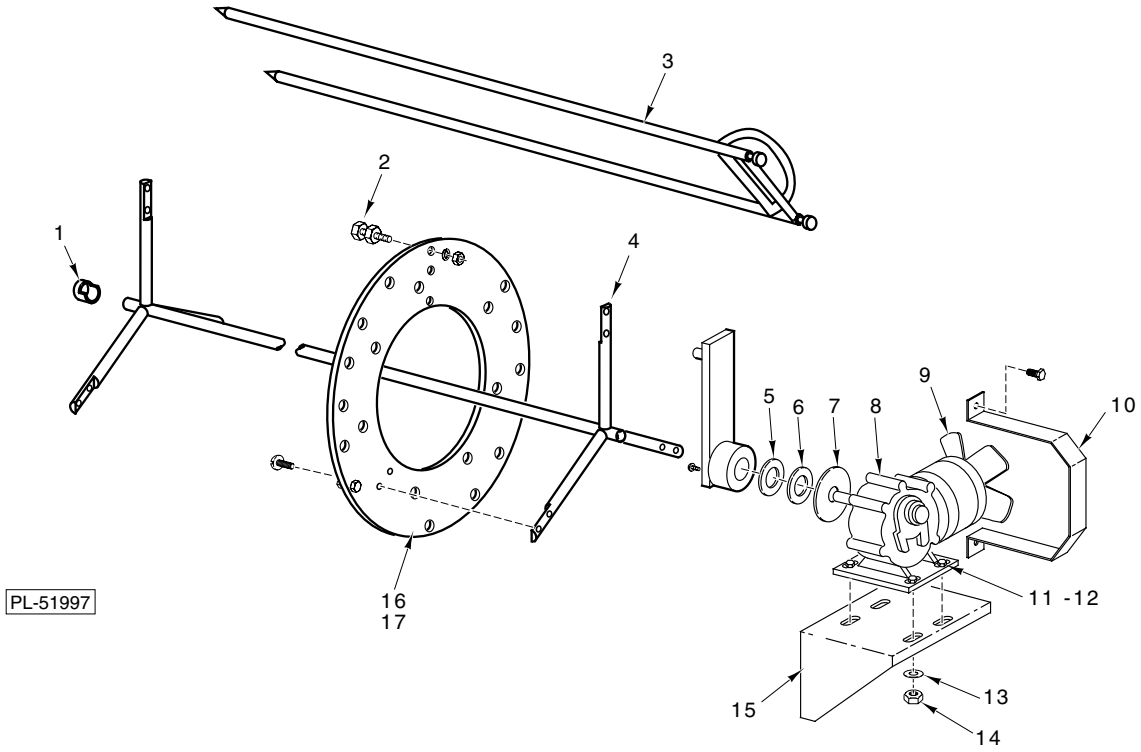

ROTISSERIE

ROTISSERIE

ILLUS. PL-51997	PART NO.	NAME OF PART	AMT.
1	360192	Bearing - Bronze	1
2	360202	Pin - Support	AR
3	360235	Fork - Meat	AR
4	360195	Shaft - Rotor	1
5	360137	Seal - Ring (Cavity Side)	1
6	359460-50	Ring - Motor Shaft Cover	1
7	359460-49	Seal - Outside Motor Shaft	1
8	359460-27	Motor - Drive (Incls. Carrier & Rotor Hub)	1
9	360248	Blade - Fan	1
10	359460-41	Guard - Fan	1
11	SC-120-48	Cap Screw M6 x 1.0 x 18mm Hex Hd.	4
12	WS-30-32	Washer	4
13	WL-19-71	Lockwasher M6 Medium	4
14	NS-47-50	Nut Hex M6 x 1.0	4
15	359460-21	Plate - Motor Mounting	1
16	357516-1	Disc - Rotor (L.H.)	1
17	357516-2	Disc - Rotor (R.H.)	1

* Note: Quantities Listed Are For One Oven Only.

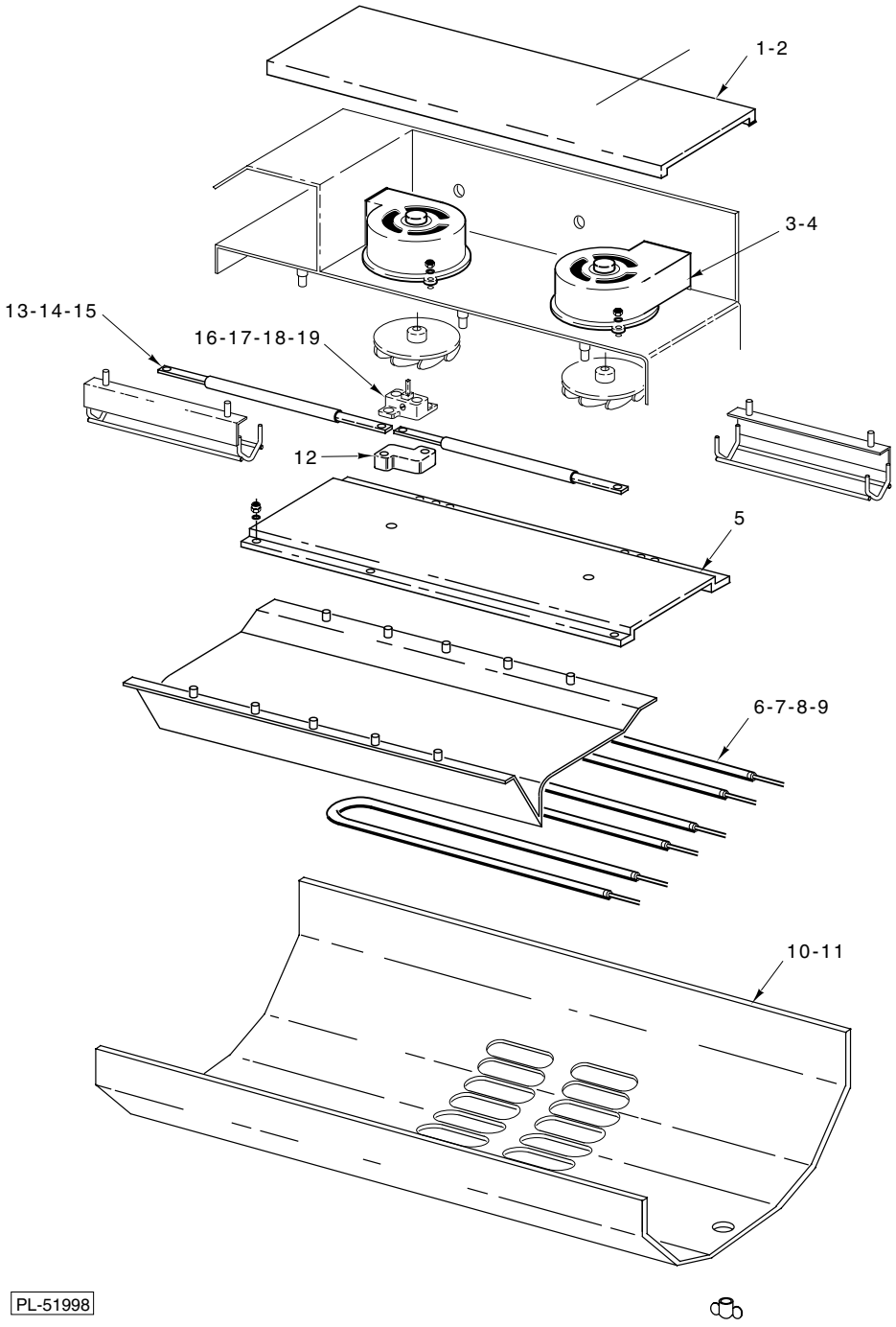

BLOWER

BLOWER

ILLUS. PL-51998	PART NO.	NAME OF PART	AMT.
1	359460-15	Plate - Fan Mounting	2
2	360238	Clip - Speed	AR
3	359460-25	Blower (W/Fan Blade)	2
4	SC-120-61	Mach. Screw M4 x 07 x 10mm Cheese Hd.	AR
5	359460-22	Plate - Ventilating	1
6	356894	Element - Heating (208V)(2100 Watts)	AR
7	357813	Element - Heating (240V)(2100 Watts)	AR
8	359460-46	Element - Heating (208V.)(3100 Watts)	AR
9	359460-47	Element - Heating (240V.)(3100 Watts)	AR
10	359460-66	Strip - Lamp Holder Mounting	2
11	359460-17	Plate - Air Deflector	1
12	360156	Holder - Quartz Lamp Cap	4
13	360155	Lamp - Quartz	2
14	SC-120-50	Cap Screw M5 x 0.8 x 8mm Hex Hd.	AR
15	WS-22-06	Washer	AR
16	360129	Holder - Quartz Lamp Base	4
17	SC-120-56	Mach. Screw M4 x 0.7 x 20mm Cheese Hd.	AR
18	WL-19-72	Lockwasher M4 Medium	AR
19	NS-47-48	Full Nut M4 Hex	AR

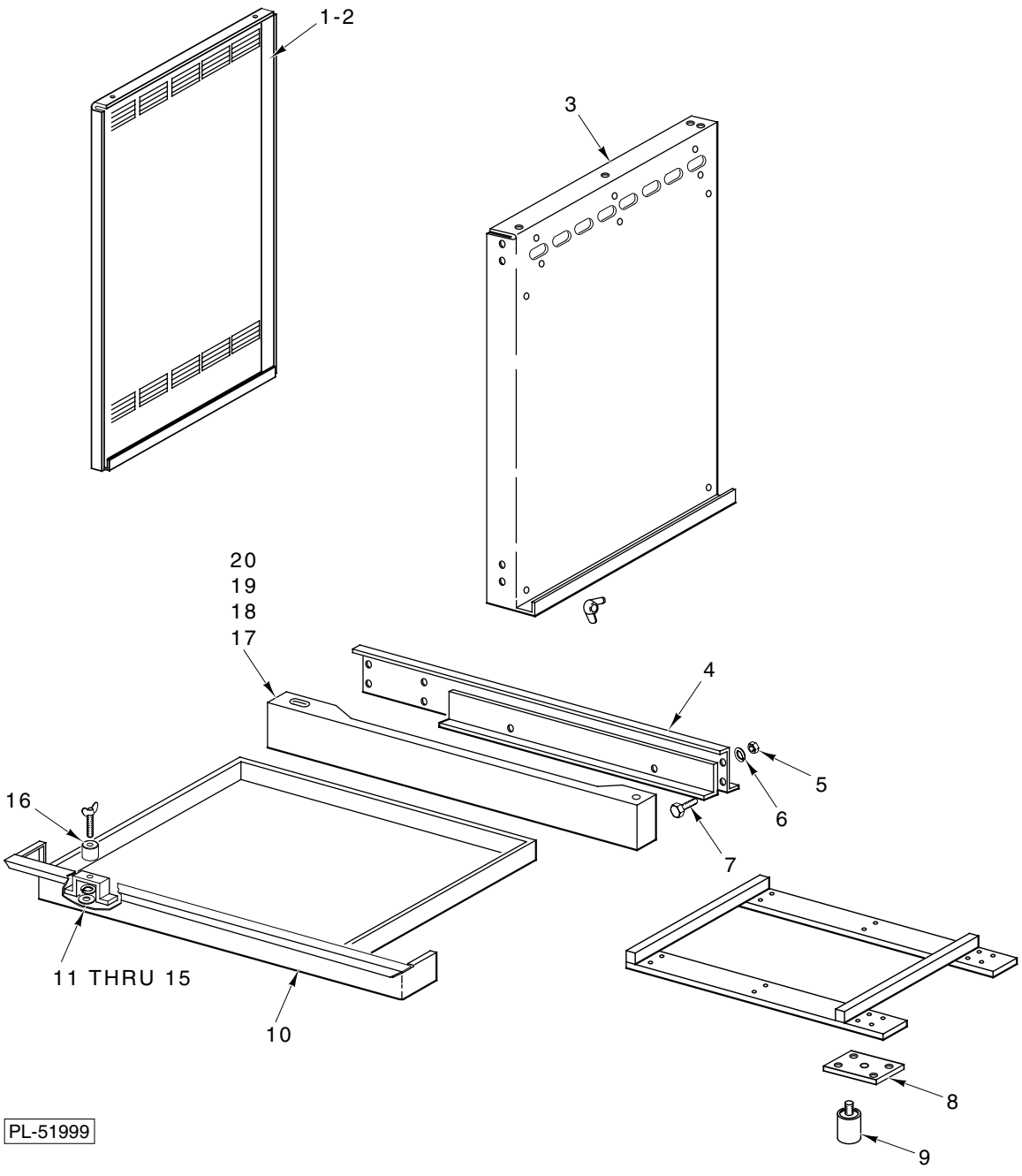

OVEN (L.H. SIDE)

OVEN (L.H. SIDE)

ILLUS. PL-51999	PART NO.	NAME OF PART	AMT.
1	359460-70	Panel - Outer (L.H.)(HRO 330)	1
2	359460-18	Panel - Outer (L.H.)(HRO 550/HRW 330)	1
3	359460-3	Panel - Inner Oven Side (L.H.)	1
4	359460-4	Reinforcement - Operator's Side	1
5	NS-47-50	Nut Hex M6 x 1.0	4
6	WL-19-71	Lockwasher M6 Medium	4
7	SC-119-10	Cap Screw M6 x 1.0 x 30mm Hex Hd.	4
8	356904	Plate - Foot Mounting	4
9	360037	Foot	4
10	359460-8	Drawer - Grease (HRO 330)(Lower HRO 550)	AR
11	360206	Gasket - Drain	1
12	359460-54	Set Screw - Grease Sealing	1
13	359460-55	Washer - Grease Sealing	1
14	359460-56	Bolt - Grease Sealing	1
15	360207	Screw - Wing	1
16	360205	Gasket - Seat	1
17	359460-12	Panel - Lower Front (Operator's Side)(HRO 330)	2
18	SC-120-49	Cap Screw M5 x 0.8 x 20mm Hex Hd.	4
19	WL-19-69	Lockwasher - M5 External Shakeproof	4
20	NS-47-49	Full Nut M5 Hex	4

* Note: Quantities Listed Are For One Oven Only

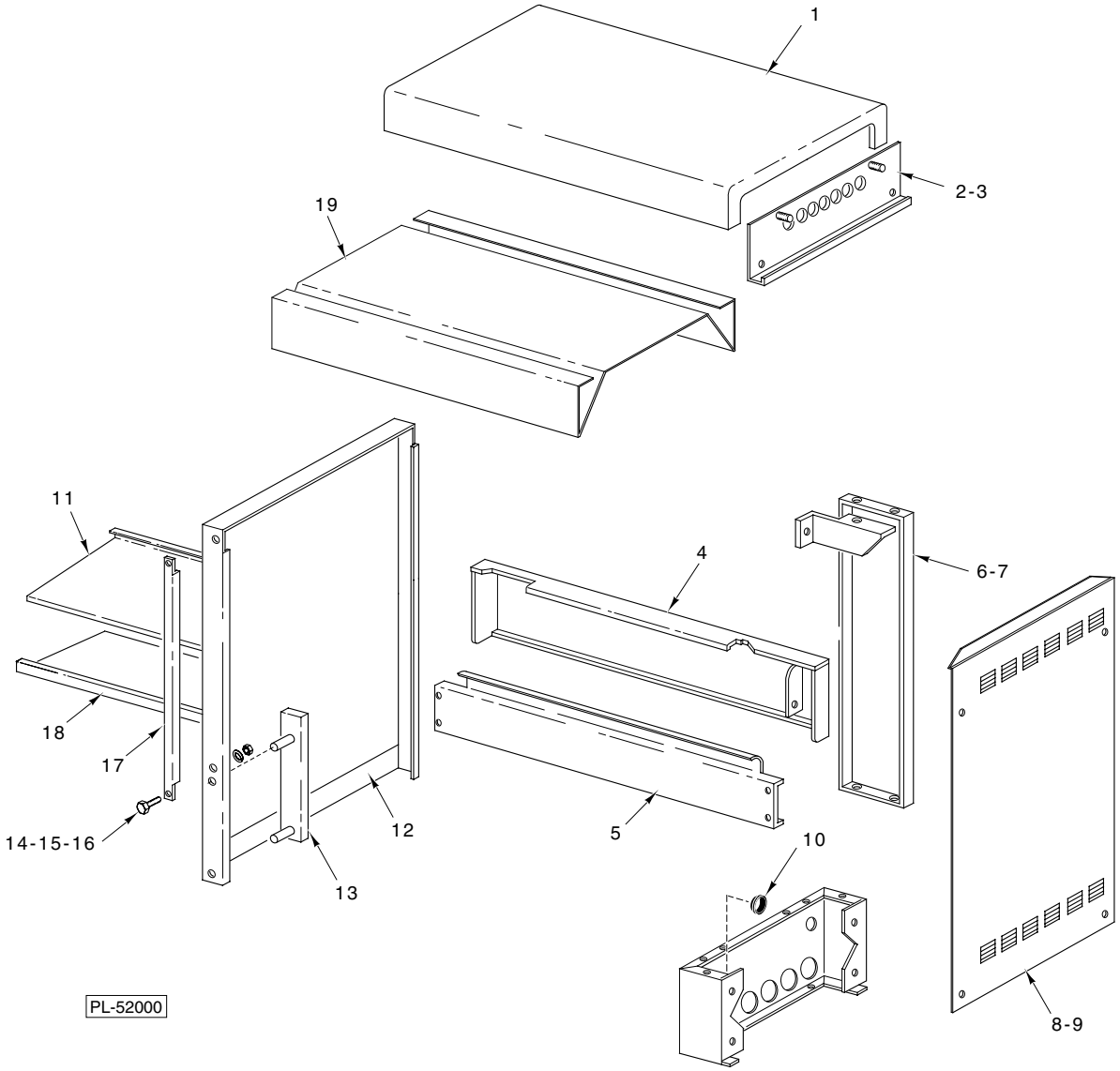

OVEN (R.H. SIDE)

OVEN (R.H. SIDE)

ILLUS. PL-52000	PART NO.	NAME OF PART	AMT.
1	359460-7	Top Assy.	1
2	359460-20	Reinforcement - Side Panel	1
3	NS-47-88	Nut - Crown M6 x 1.0	AR
4	359460-12	Panel - Lower Front (Operator's Side)(HRO 330)	1
5	359460-5	Panel - Inside Front (Customer's Side)	1
6	359460-40	Panel - Customer's Side (HRW 330)	1
7	359460-24	Panel - Customer's Side (HR0 330/550)	1
8	359460-43	Panel - Outer (R.H.)(HRO 330)	1
9	359460-69	Panel - Outer (R.H.)(HRO 550/HRW 330)	1
10	360143	Bushing	1
11	359460-53	Plate - Grease (Small)	1
12	359460-2	Panel - Inner Oven Side (R.H.)	1
13	356958	Strip - Front Mounting (HRW330)	4
14	SC-120-57	Cap Screw M6 x 1.0 x 10mm Hex Hd.	AR
15	WL-19-71	Lockwasher M6 Medium	AR
16	NS-47-50	Nut Hex M6 x 1.0	AR
17	356907	Strip - Magnet Activator	1
18	359460-52	Plate - Grease (Large)	1
19	359460-6	Ceiling - Oven Top	1
	360209	Clip - Insulation	AR

* Note: Quantities Listed Are For One Oven Only

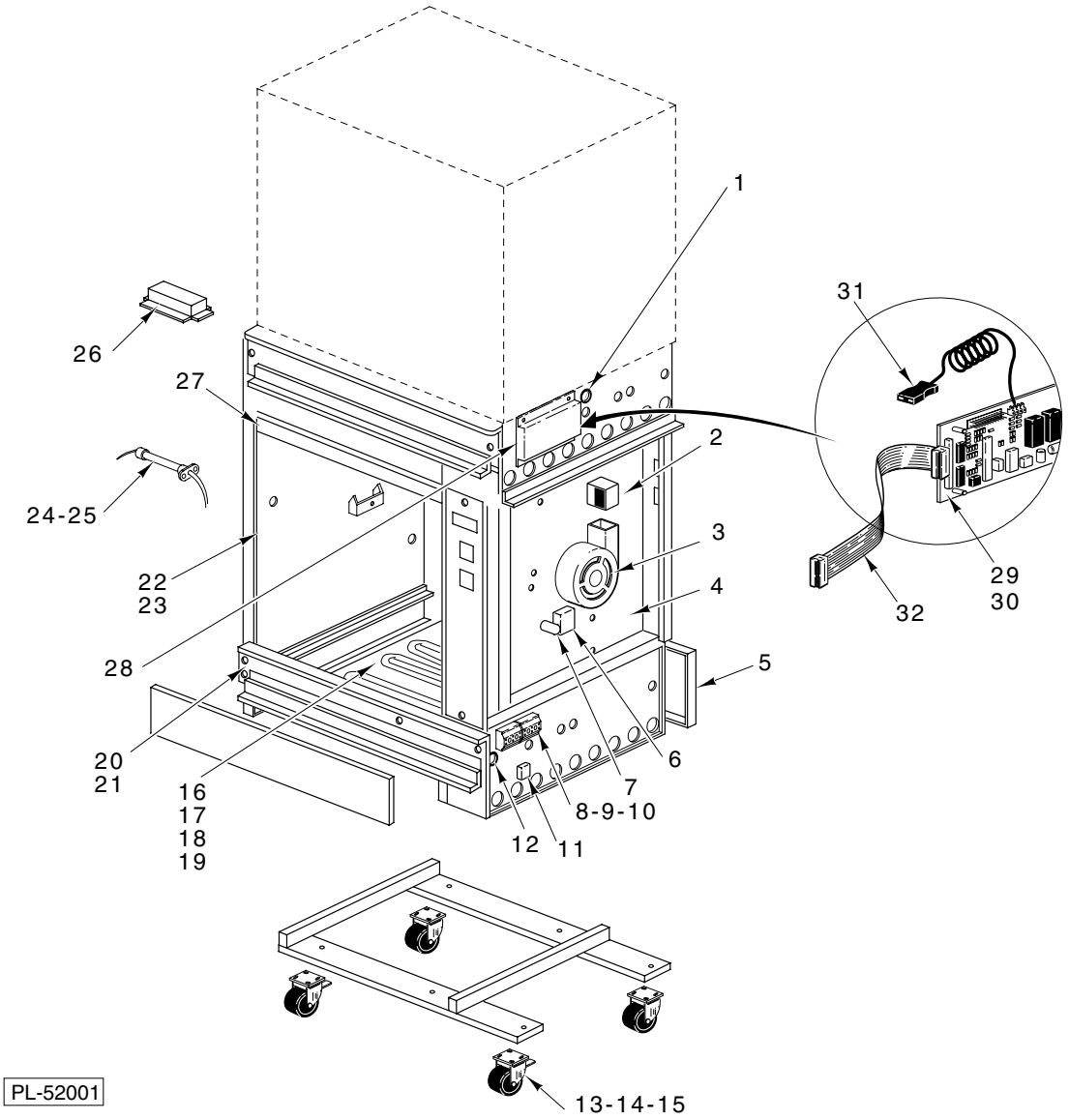
1
31
26
27
2
24-25
3
22
23
4
29
30
32
28
5
20
21
6
7
16
17
18
19
8-9-10
12
11
PL-52001
13-14-15

FRAME

FRAME

ILLUS. PL-52001	PART NO.	NAME OF PART	AMT.
1	360143	Bushing	1
2	359460-36	Duct - Air	1
3	359460-25	Blower (W/Fan Blade)	AR
4	359460-31	Plate - Fan	1
5	359460-11	Panel - Lower Front (Operator's Side)	1
6	356841	Block - Terminal	1
7	359460-57	Capacitor 1.5 mf (Use w/item 4)	1
8	358712-1	Block - Terminal "1,2,3"	1
9	358712-2	Block - Terminal "4,5,6"	1
10	360280	Plate - Ground	2
11	359460-58	Strain Relief	1
12	360143	Bushing	1
13	360245	Caster W/O Lock (HRO 550/HRW 330)	2
14	360244	Caster W/Lock (HRO 550/HRW 330)	2
15	356876	Spacer (HRO 550/HRW 330)	4
16	NS-47-87	Nut M14 x 1.5 Hex	AR
17	360241	Element - Heater	1
18	360066	Gasket	4
19	356932	Shield - Heating Element	1
20	359460-30	Front - Inside (Operator's Side)	1
21	359460-51	Front - Inside (Lower Customer's Side)	1
22	359460-29	Panel - Inner Warmer Side Assy. (L.H.)	1
23	359460-28	Panel - Inner Warmer Side Assy. (R.H.)	1
24	360240	Holder - Lamp	1
25	360446	Lamp - Halotherm 200W	2
26	356861	Lamp - Reflector (Halogen)	1
27	359460-34	Ceiling - Warmer	1
28	359758-8	Cover - Controls Circuit Board (HRO 330P & HRO550P)	1
29	359460-61	Timer - Control (12 Hr.)	1
30	359758-4	Circuit Board - Controls (HRO330P & HRO550P)(Incls. items 31 & 32)	1
31	359758-11	Receptacle - Meat Probe (HRO330P & HRO550P)	1
32	359758-14	Ribbon Cable (HRO330P & HRO550P)	1

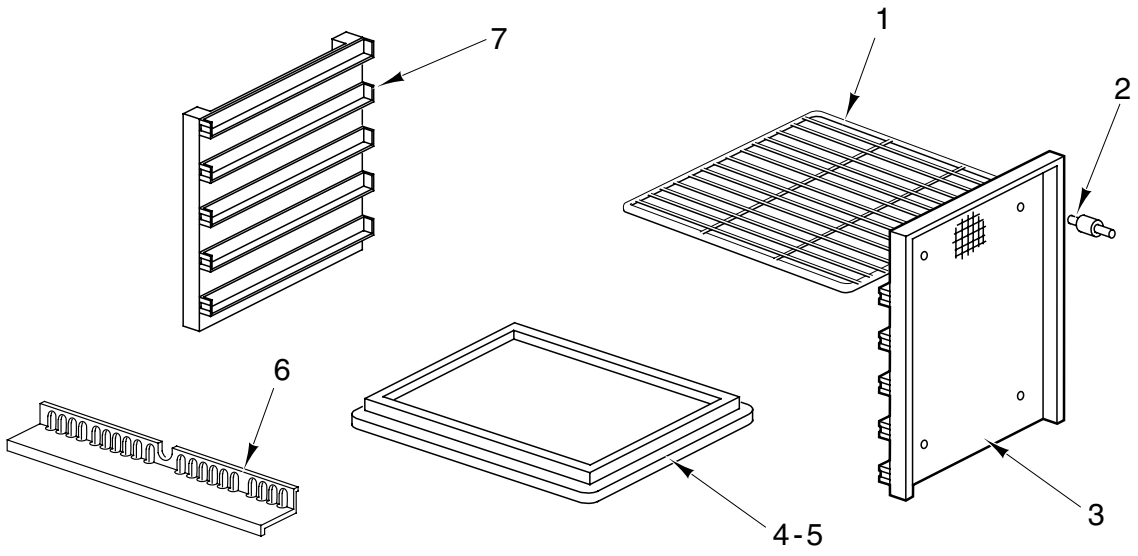

PL-52002

TRAYS & SHELVES (WARMER)

TRAYS & SHELVES (WARMER)

ILLUS. PL-52002	PART NO.	NAME OF PART	AMT.
1	356929	Rack - Stainless Steel Wire	3
2	360136	Spacer - Fan Guard	4
3	359460-31	Plate - Fan	1
4	360242	Tray - Gastronome	1
5	360296	Rod - Support	3
6	359460-35	Plate - Air guide	2
7	359460-32	Rack - Slide W/Runner	1

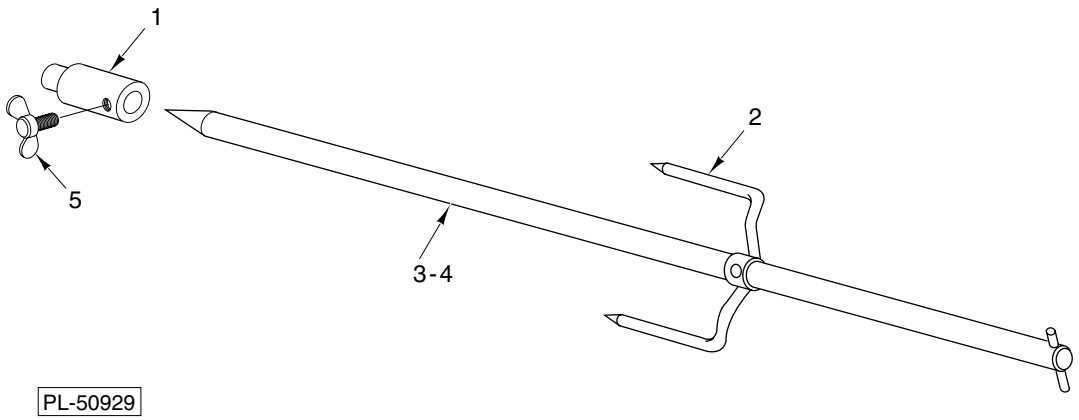

PL-50929

ACCESSORIES

ILLUS. PL-50929	PART NO.	NAME OF PART	AMT.
1	360386	Sleeve - Spit	1
2	360387	Fork - Spit	AR
3	360388	Shaft - Spit	1
4	360247	Spit - Turkey (Incls. items 1,2,3 & 5)	1
5	360297	Screw - Wing M5	AR
	360154	Basket	1
	360284	Key - Spit	1
	360189	Rack - Chicken	1
	360235-2	Spit (HRO 330/550)	1
	359580	Spit- “V”	AR