CATALOG OF REPLACEMENT PARTS



HS4N SLICER

ML-136338 **HS4N**

A product of HOBART 701 S. RIDGE AVENUE TROY, OHIO 45374-0001

FORM 43311 Rev. C (March 2022)

 © HOBART 2022

Table of Contents

5 KNIFE DRIVE MOTOR
7 TOP COVER AND RING GUARD
9 KNIFE AND KNIFE SHAFT
11 GAUGE PLATE AND INDEX
13 PRODUCT TRAY AND MEAT GRIP ASSEMBLY
15 SHARPENER ASSEMBLY
17 TRANSPORT CARRIAGE ASSEMBLY
19 BASE AND KICK STAND
21 CONTROLS AND ELECTRICAL COMPONENTS
23 ACCESSORIES

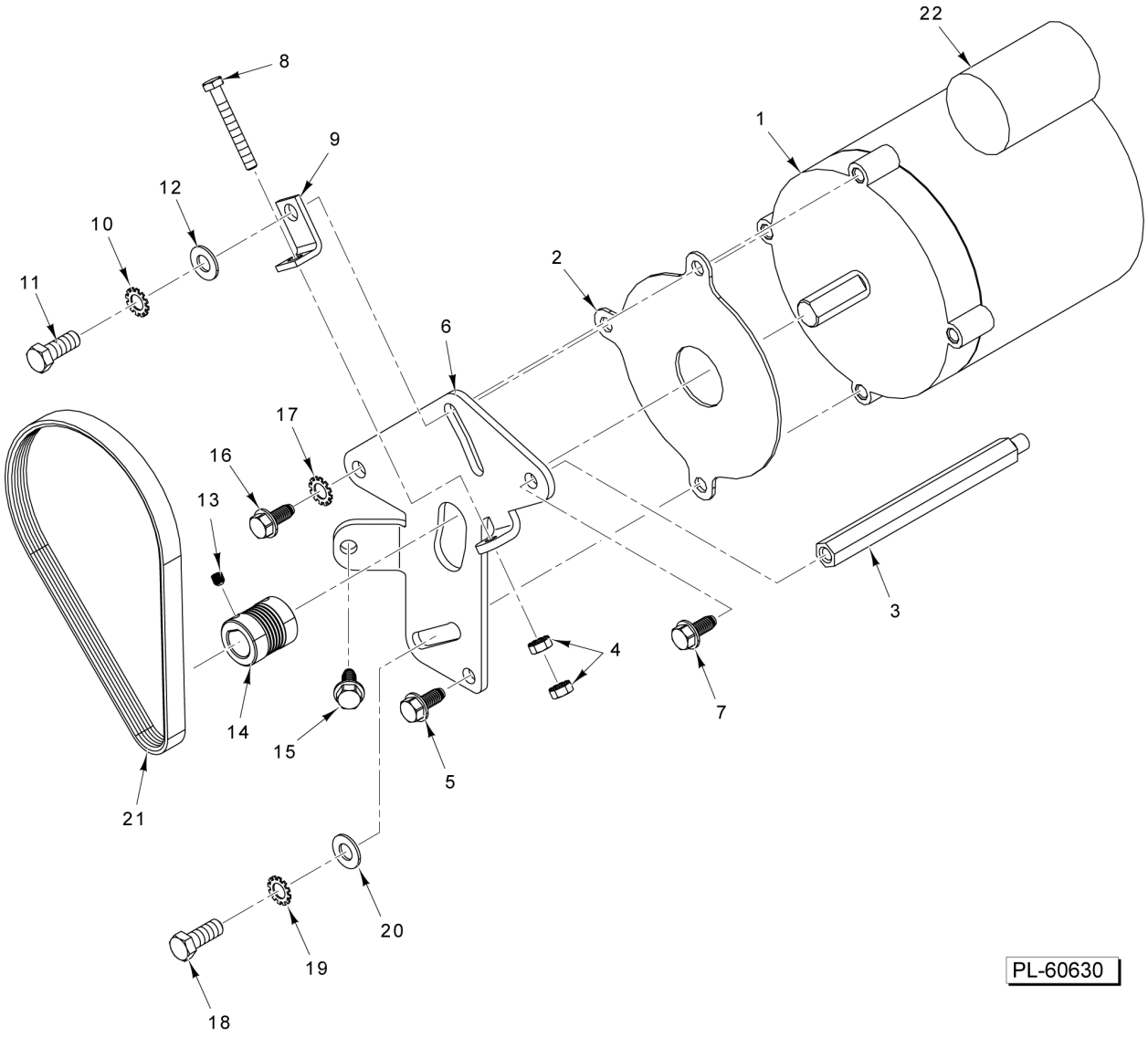

KNIFE DRIVE MOTOR

KNIFE DRIVE MOTOR

ILLUS. PL-60630	PART NO.	NAME OF PART	AMT.
1	00-915665	Motor (60 Hz.) (Incls. Item 22)	1
2	00-439032	Gasket - Motor	1
3	00-438984	Standoff	1
4	NS-044-14	Nut 1/4-20 Hex KEPS	2
5	SD-038-18	Self-Tapping Screw 5/16-18 x 3/4 Hex Washer Hd., Type RL	1
6	00-477760	Plate - Motor	1
7	SD-038-18	Self-Tapping Screw 5/16-18 x 3/4 Hex Washer Hd., Type RL	1
8	SC-118-98	Cap Screw 1/4-20 x 2 Hex Hd	1
9	00-477532	Bracket - Tensioner Adjustment	1
10	WL-007-25	Lockwasher 3/8 External	1
11	SC-037-73	Cap Screw 3/8-16 x 1 Hex Hd	1
12	WS-018-22	Washer	1
13	SC-123-65	Set Screw 1/4-28 x 3/8 Hex Hdls., Flat Pt. (SST)	2
14	00-438844-00002	Sheave - Poly "V"	1
15	SD-038-18	Self-Tapping Screw 5/16-18 x 3/4 Hex Washer Hd., Type RL	1
16	SD-038-18	Self-Tapping Screw 5/16-18 x 3/4 Hex Washer Hd., Type RL	1
17	WL-007-25	Lockwasher 3/8 External	1
18	SC-037-74	Cap Screw 3/8-16 x 1-1/2 Hex Hd	1
19	WL-007-25	Lockwasher 3/8 External	1
20	WS-018-22	Washer	1
21	00-438845	Belt - Poly "V"	1
22	00-915739	Capacitor	1

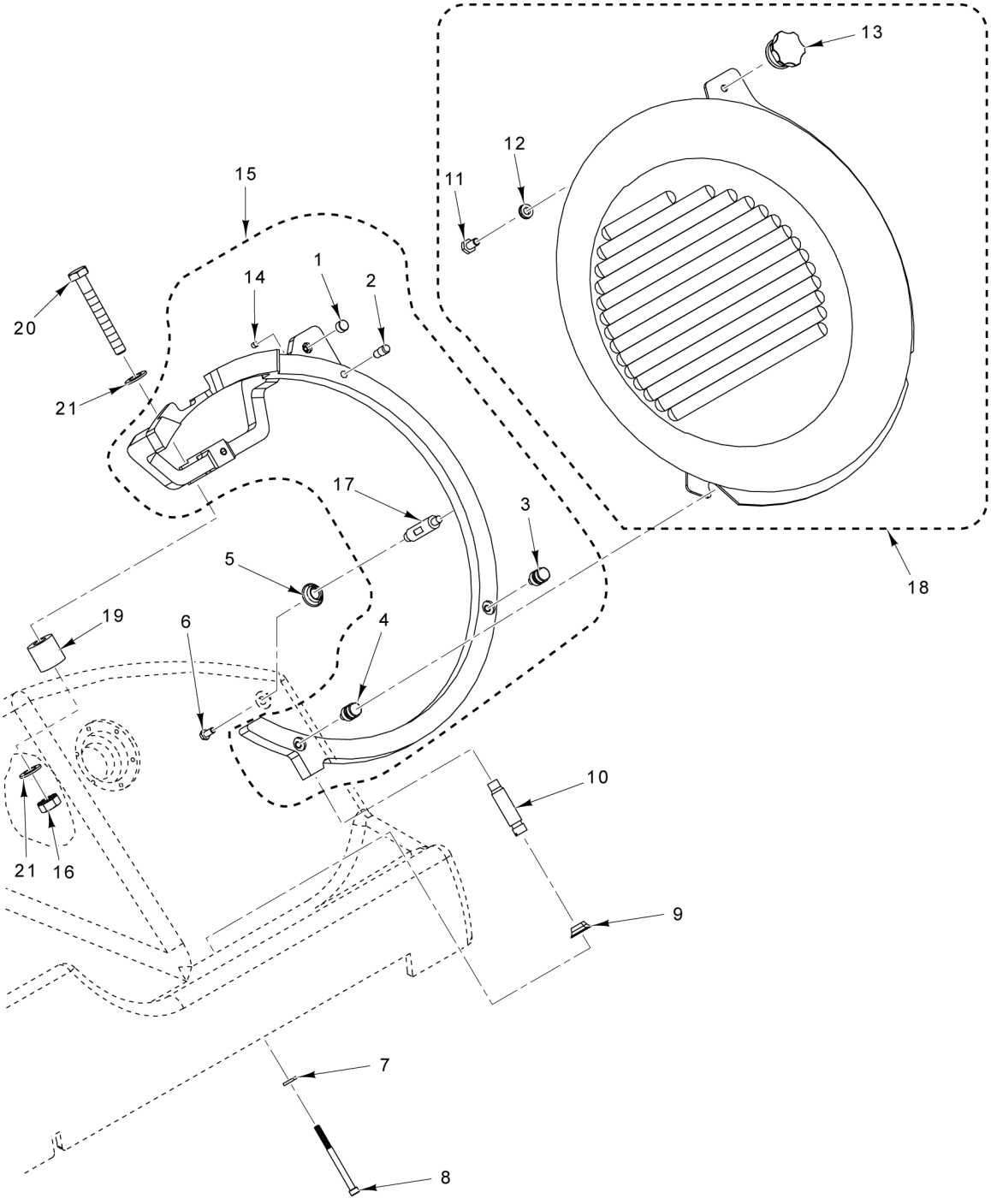

TOP COVER AND RING GUARD

TOP COVER AND RING GUARD

ILLUS. PL-60631	PART NO.	NAME OF PART	AMT.
1	00-915319	Magnet	1
2	00-915299	Pin - Top Cover	1
3	00-915378	Pin - Tapered	1
4	00-915378	Pin - Tapered	1
5	00-914429	Boot - Ring Guard	1
6	SC-037-80	Cap Screw 10-24 x 1/2 Hex Hd	1
7	WS-031-78	Washer	1
8	SC-131-56	Cap Screw 10-24 x 2-1/2 Hex Socket Hd	1
9	00-914429	Boot - Ring Guard	1
10	00-915300	Post - Ring Guard	1
11	SC-131-80	Cap Screw 1/4-20 x 1/2 Hex Hd. (SST)	1
12	WS-031-80	Washer	1
13	00-915297	Knob - Top Cover	1
14	SC-131-63	Set Screw 1/4-20 x 1/4 Hex Hdls., Flat Pt. (SST)	1
15	00-915713	Ring Guard Assy. (Incls. 1 thru 4, 14 & 17)	1
16	NS-015-22	Nut 1/2-13 Hex	1
17	00-915701	Standoff - Ring Guard	1
18	00-915712	Top Cover Assy. (Incls. Items 11, 12, & 13)	1
19	00-915680	Spacer - Sharpener Mount	1
20	SC-132-09	Cap Screw 1/2-13 x 3 Hex Hd	1
21	WS-008-48	Washer (SST)	2

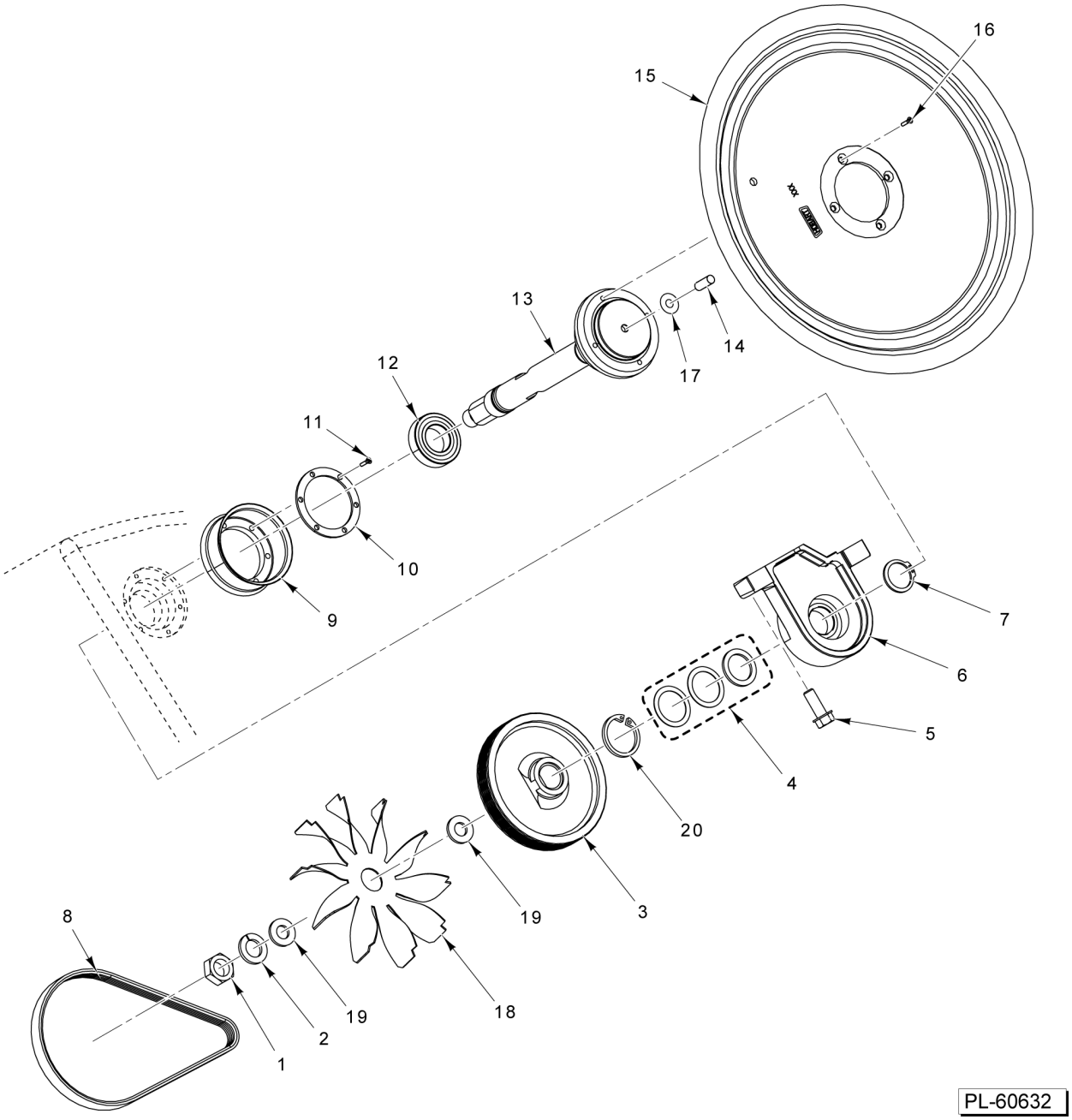

KNIFE AND KNIFE SHAFT

KNIFE AND KNIFE SHAFT

ILLUS. PL-60632	PART NO.	NAME OF PART	AMT.
1	NS-017-41	Jam Nut 5/8-18 Hex (SST)	1
2	WL-004-17	Lockwasher 5/8 Light	1
3	00-937968	Sheave - Poly "V" Large 6 Groove	1
4	00-937970	Washer Assy	1
5	SC-123-50	Cap Screw 3/8-16 x 1 Hex Washer Hd	2
6	00-875180-00002	Retainer - Lower Hub & Bearing	1
7	RR-009-07	Retaining Ring	1
8	00-438845	Belt - Poly "V"	1
9	00-915341	Boot - Knife Shaft	1
10	00-915342	Ring - Boot	1
11	SC-131-62	Cap Screw 8-32 x 7/8 Hex Socket Hd. (SST)	6
12	BB-021-66	Bearing - Ball	1
13	00-915283-00003	Knife Shaft Assy. (Non-Removable) (Incls. Item 12)	1
14	00-915308	Plug - Rulon	1
15	00-915670	Knife - Slicer (13 In.)	1
16	SC-114-99	Mach. Screw 10-32 x 1/2 Phil. Flat Hd. (SST)	4
17	WS-031-82	Washer 0.289 X 0.365 X 0.016 (SST)	AR
18	00-937927	Fan	1
19	WS-010-27	Washer 0.641 x 1.125 x 0.031	2
20	RR-012-48	Retaining Ring	1

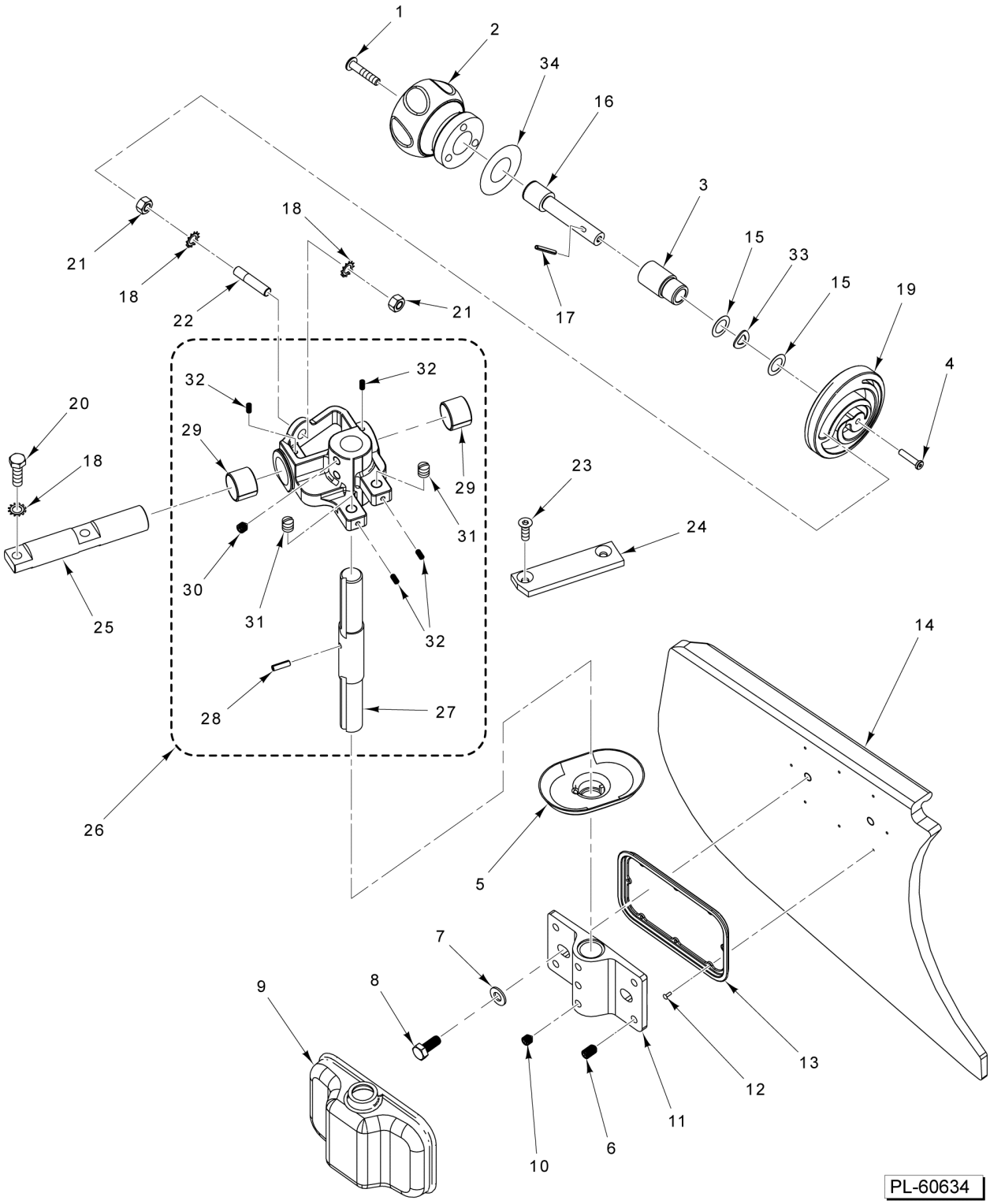

GAUGE PLATE AND INDEX

GAUGE PLATE AND INDEX

ILLUS. PL-60634	PART NO.	NAME OF PART	AMT.
1	SC-125-95	Mach. Screw 1/4-20 x 1-1/4 Phil. Pan Hd. (SST)	1
2	00-937967	Knob - Index Assy	1
3	00-915304	Bushing - Index	1
4	SC-131-75	Cap Screw 10-32 x 7/8 Hex Socket Hd. (SST)	1
5	00-915313	Boot - Index Slide	1
6	SC-131-74	Set Screw 5/16-24 x 1/2 Hex Hdls., Flat Pt	4
7	WS-005-32	Washer (SST)	2
8	SC-062-72	Cap Screw 5/16-24 x 3/4 Hex Hd	2
9	00-915301	Boot - Gauge Plate	1
10	SC-117-68	Set Screw 5/16-24 x 3/8 Hex Hdls., Cone Pt	3
11	00-915289-00002	Support - Gauge Plate	1
12	00-121676-00001	Self-Tapping Screw #2 x 1/4 Truss Hd	8
13	00-915293	Bracket - Gauge Plate Boot (Must Order Item 12 Also)	1
14	00-915282-00003	Plate - Gauge (Must Order Items 12 & 13 Also)	1
15	WS-030-58	Washer 0.500 x 0.750 x 0.010 (SST)	2
16	00-915305	Shaft - Index Knob	1
17	RP-003-12	Roll Pin 1/8 Dia. x 1-1/4 Lg	1
18	WL-007-20	Lockwasher 5/16 External Shakeproof	4
19	00-915667	Cam - Index	1
20	SD-038-14	Self-Tapping Screw 1/4-20 x 7/8 Hex Washer Hd., Type RL (SST)	2
21	NS-015-11	Nut 5/16-18 Hex (SST)	2
22	00-915671	Pin - Index Cam	1
23	SC-129-94	Cap Screw 1/4-20 x 3/4 Hex Flat Hd. (SST)	2
24	00-915677	Plate - Anti-Rotation	1
25	00-915678	Rod - Index Slider	1
26	00-915695	Slide - Index Assy. (Incls. Items 27 thru 32)	1
27	00-915679	Shaft - Guage Plate Mount	1
28	RP-002-35	Roll Pin 3/16 Dia. x 5/8 Lg. (SST)	1
29	00-875658	Bearing - Transport	2
30	SC-117-68	Set Screw 5/16-24 x 3/8 Hex Hdls., Cone Pt	3
31	SC-132-03	Set Screw	2
32	SC-088-71	Set Screw 8-32 x 3/8 Hdls., Flat Pt	4
33	SL-005-18	Spring - Loading (0.523 I.D., 0.865 O.D., 0.010 Thk.) (SST) (Wavy)	1
34	00-558177	Shim 2 In. O.D. x 1 In. I.D. x 0.048 Thk	1

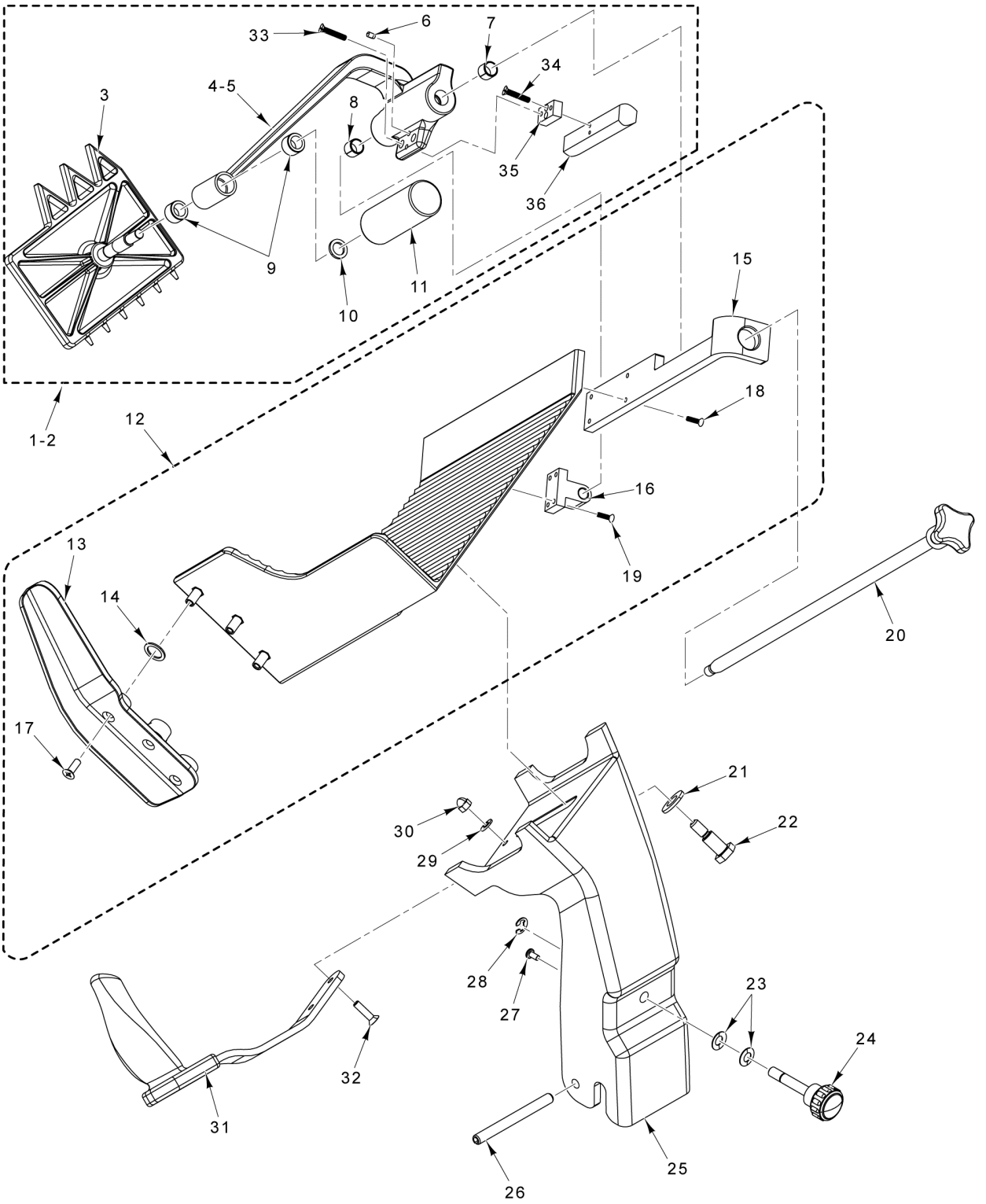

PRODUCT TRAY AND MEAT GRIP ASSEMBLY

PRODUCT TRAY AND MEAT GRIP ASSEMBLY

ILLUS. PL-60633	PART NO.	NAME OF PART	AMT.
1	00-915395-00002	Meat Grip Assy. (Incls. Items 3, 4, & 6 thru 11)	1
2	00-915395-00003	Meat Grip Assy. (Heavy) (Incls. Items 3, 5 thru 11, & 33 thru 36)	1
3	00-915257	Grip - Meat	1
4	00-915375-00002	Meat Grip Arm Assy. (Incls. Items 6 thru 9)	1
5	00-915597	Meat Grip Arm Assy. (Heavy) (Incls. Items 6 thru 9 & 33 thru 36)	1
6	00-914446	Pad - Stop	2
7	00-914452	Bearing - Grip Arm	1
8	00-914452	Bearing - Grip Arm	1
9	00-478254	Bushing	2
10	WS-021-21	Washer 0.500 x 0.750 x 0.093 (Nylon)	1
11	00-914937	Handle - Meat Grip	1
12	00-915393	Product Tray Assy. (Incls. Items 13 thru 19)	1
13	00-915268	Guard - Thumb	1
14	00-915275	Washer (Rubber)	3
15	00-915259	Bracket - Support	1
16	00-915230-00002	Block - Support	1
17	SC-131-61	Mach. Screw 1/4-20 x 3/4 Phil. Flat Hd. (SST)	3
18	SC-022-10	Mach. Screw 8-32 x 5/8 Slotted Flat Hd. (SST)	4
19	SC-022-10	Mach. Screw 8-32 x 5/8 Slotted Flat Hd. (SST)	4
20	00-915286	Slide Rod Assy.	1
21	WS-031-53	Washer 0.531 x 1.063 x 0.109 (SST)	2
22	00-915407	Shoulder Screw 1/2 Dia. 3/8-16	2
23	00-478021	Washer - Belleville	2
24	00-875450	Knob - Support Tray Assy.	1
25	00-915400-00001	Tray Support Assy. (Incls. Items 26 & 27)	1
26	RP-006-51	Pin - Roll (0.375)	1
27	00-439045	Stud - Drive	2
28	RR-012-17	Retaining Ring	1
29	WS-003-49	Washer 0.266 x 0.563 x 0.062 (SST)	2
30	NS-025-04	Crown Nut 1/4-20 (SST)	2
31	00-915296	Handle - Tray	1
32	SC-125-93	Mach. Screw 1/4-20 x 1 Phil. Flat Hd. (SST)	2
33	SC-022-71	Mach. Screw 8-32 x 7/8 Slotted Flat Hd. (SST)	2
34	SC-022-11	Mach. Screw 8-32 x 1 Slotted Flat Hd. (SST)	2
35	00-915591	Spacer - Heavy Meat Grip	1
36	00-915590	Block - Heavy Meat Grip	1

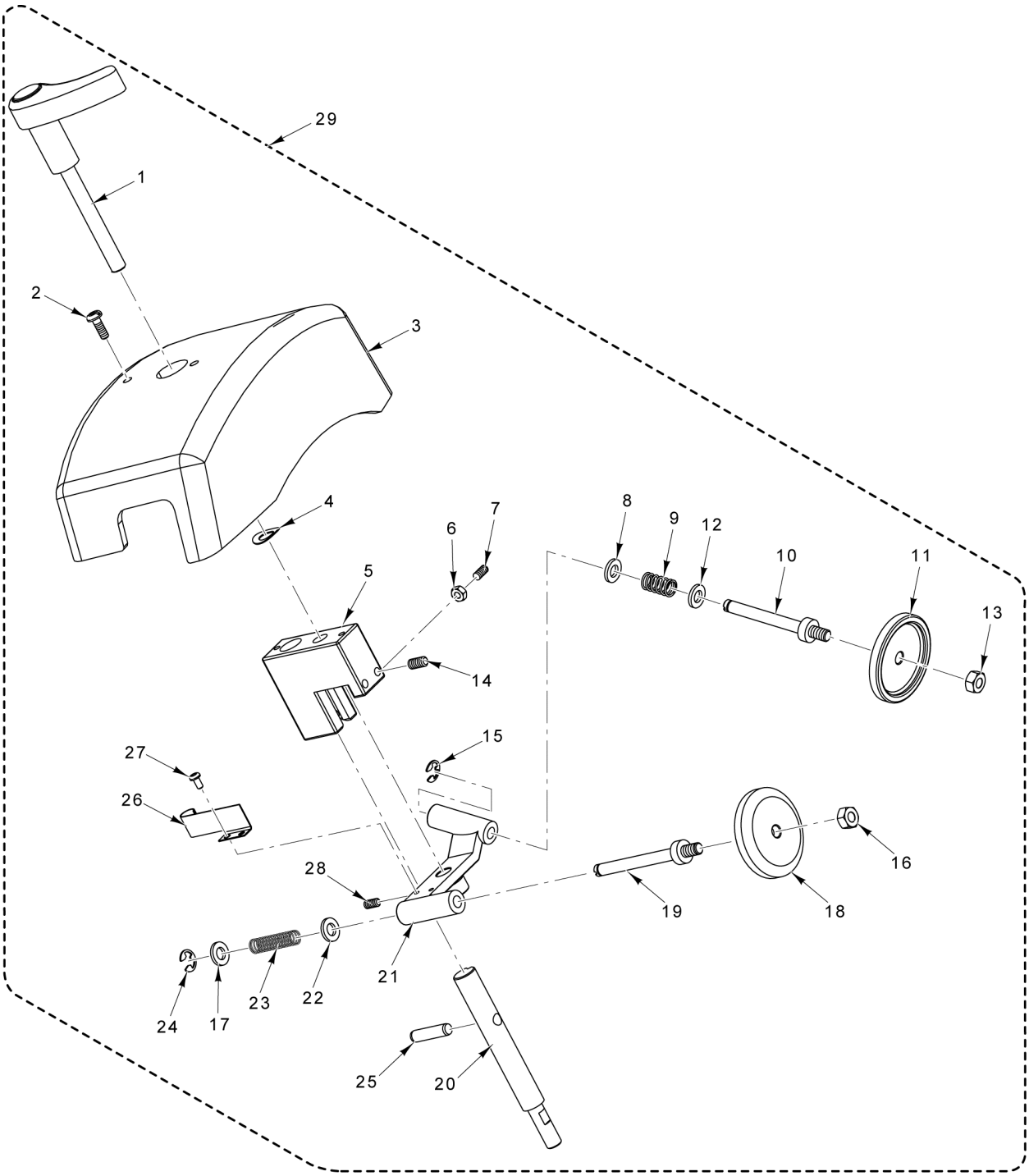

PL-60635

SHARPENER ASSEMBLY

SHARPENER ASSEMBLY

ILLUS. PL-60635	PART NO.	NAME OF PART	AMT.
1	00-479347	Knob - Sharpener Assy	1
2	SC-118-28	Mach. Screw M4 x 0.7 x 12mm Slotted Pan Hd. (SST)	2
3	00-915696	Cover - Sharpener	1
4	SL-005-09	Spring - Loading	1
5	00-479337	Mount - Sharpener	1
6	NS-200-03	Nut M4 x 0.7 Hex (SST)	1
7	SC-127-76	Set Screw M4 x 0.7 x 10mm Hex Hdls., Cone Pt. (SST)	1
8	WS-031-17	Washer (SST)	1
9	00-479400	Spring - Grinding	1
10	00-479339	Shaft - Sharpener	1
11	00-915735	Stone - Sharpening	1
12	WS-031-17	Washer (SST)	1
13	NS-048-68	Nut M6 x 1 Hex	1
14	SC-126-44	Set Screw M5 x 0.8 x 10 mm Hex Hdls., Flat Pt	2
15	RR-012-12	Retaining Ring	1
16	NS-048-68	Nut M6 x 1 Hex	1
17	WS-031-17	Washer (SST)	1
18	00-915736	Stone - Truing	1
19	00-479340	Shaft - Truing	1
20	00-479356	Post - Sharpener Assy. (Incls. Item 25)	1
21	00-479338	Arm - Sharpener	1
22	WS-031-17	Washer (SST)	1
23	00-479345	Spring - Truing	1
24	RR-012-12	Retaining Ring	1
25	00-873226-00002	Pin	1
26	00-479344	Spring - Return	1
27	SC-119-16	Mach. Screw M3 x 6mm Pan Hd	2
28	SC-146-43	Set Screw M4 x 5 Hex Hdls., Cone Pt	1
29	00-915685	Sharpener Assy. (Incls. Items 1 thru 28)	1

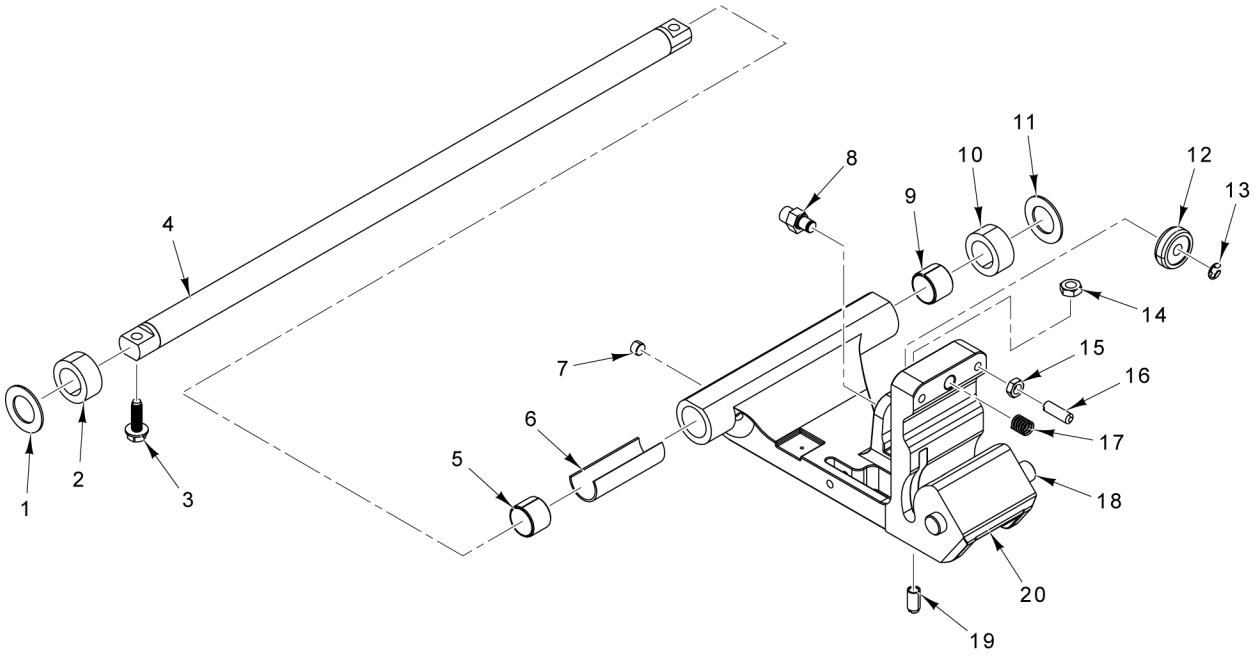

TRANSPORT CARRIAGE ASSEMBLY

TRANSPORT CARRIAGE ASSEMBLY

ILLUS. PL-60636	PART NO.	NAME OF PART	AMT.
1	00-435708	Washer - Backup (SST)	1
2	00-915255	Bumper - Slide Rod	1
3	SD-033-08	Self-Tapping Screw 5/16-18 x 1 Hex Washer Hd., Type TT	2
4	00-438907	Slide - Rod	1
5	00-875658	Bearing - Transport (Metal)	1
6	00-439017	Wick - Slide Rod Lubrication	1
7	00-915319	Magnet	1
8	00-915606	Stud - Roller Bearing	1
9	00-875658	Bearing - Transport	1
10	00-915255	Bumper - Slide Rod	1
11	00-435708	Washer - Backup (SST)	1
12	00-478420	Roller - Transport	1
13	RR-006-23	Retaining Ring	1
14	NS-017-20	Jam Nut 3/8-24 Hex	1
15	NS-018-06	Jam Nut 5/16-18 Hex (SST)	2
16	SC-128-35	Set Screw 5/16-18 x 1 Slotted Hdls., Flat Pt	2
17	00-519826	Insert - Screw	1
18	00-915260	Rod - Tray Arm Mounting	1
19	00-477747	Set Screw - Special	1
20	00-915592-00001	Carriage - Transport (Service) (Incls. Items 5, 7, 9, 17, & 18)	1

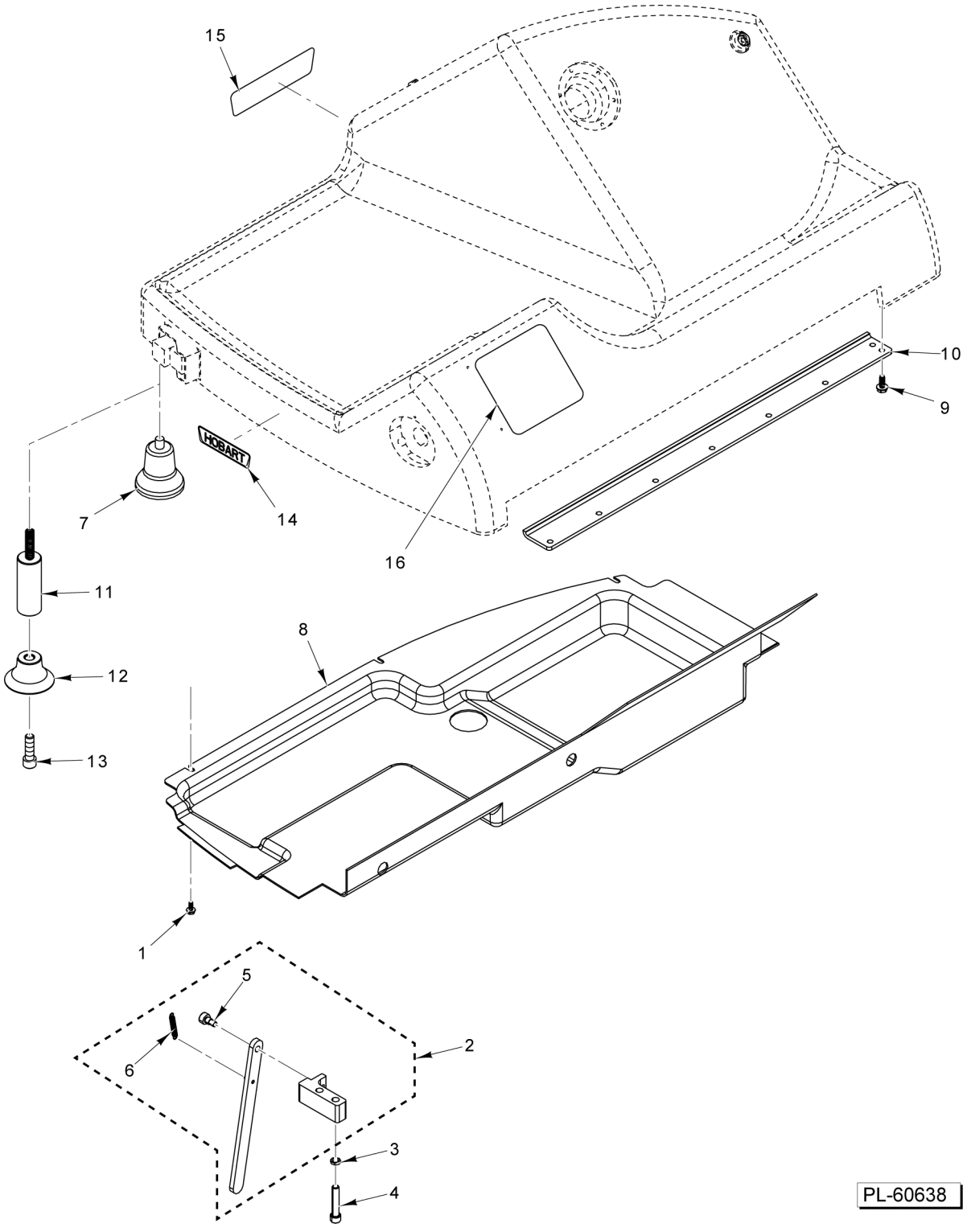

BASE AND KICK STAND

BASE AND KICK STAND

ILLUS. PL-60638	PART NO.	NAME OF PART	AMT.
1	SD-038-16	Self-Tapping Screw 6-32 x 3/8 Hex Washer Hd., Type RL	5
2	00-915340	Kick Stand Assy. (Incls. Items 5 & 6)	1
3	WL-003-35	Lockwasher 1/4 Helical	2
4	SC-089-05	Cap Screw 1/4-20 x 1-1/2 Hex Socket Hd	2
5	01-402175-00525	Shoulder Bolt	1
6	01-403275-00234	Spring - Extension	1
7	00-875371	Foot - Tall	4
8	00-915344-00002	Cover - Bottom	1
9	SD-038-22	Self-Tapping Screw 10-24 x 1/2 Hex Washer Hd., Type RL	8
10	00-915252	Bar - Transport Roller	1
11	00-915523	Leg Extension (4-1/2 In.) (Set of 4)	4
12	00-914835	Foot - Base	4
13	SC-059-32	Cap Screw 5/16-18 x 1 Hex Socket Hd	4
14	00-477740	Logo - Hobart (Small)	1
15	00-477739	Logo - Hobart (Large)	1
16	00-916957-00045	Label - Warning	1
	00-916957-00044	Label - Warning (Eng, Spanish)	1

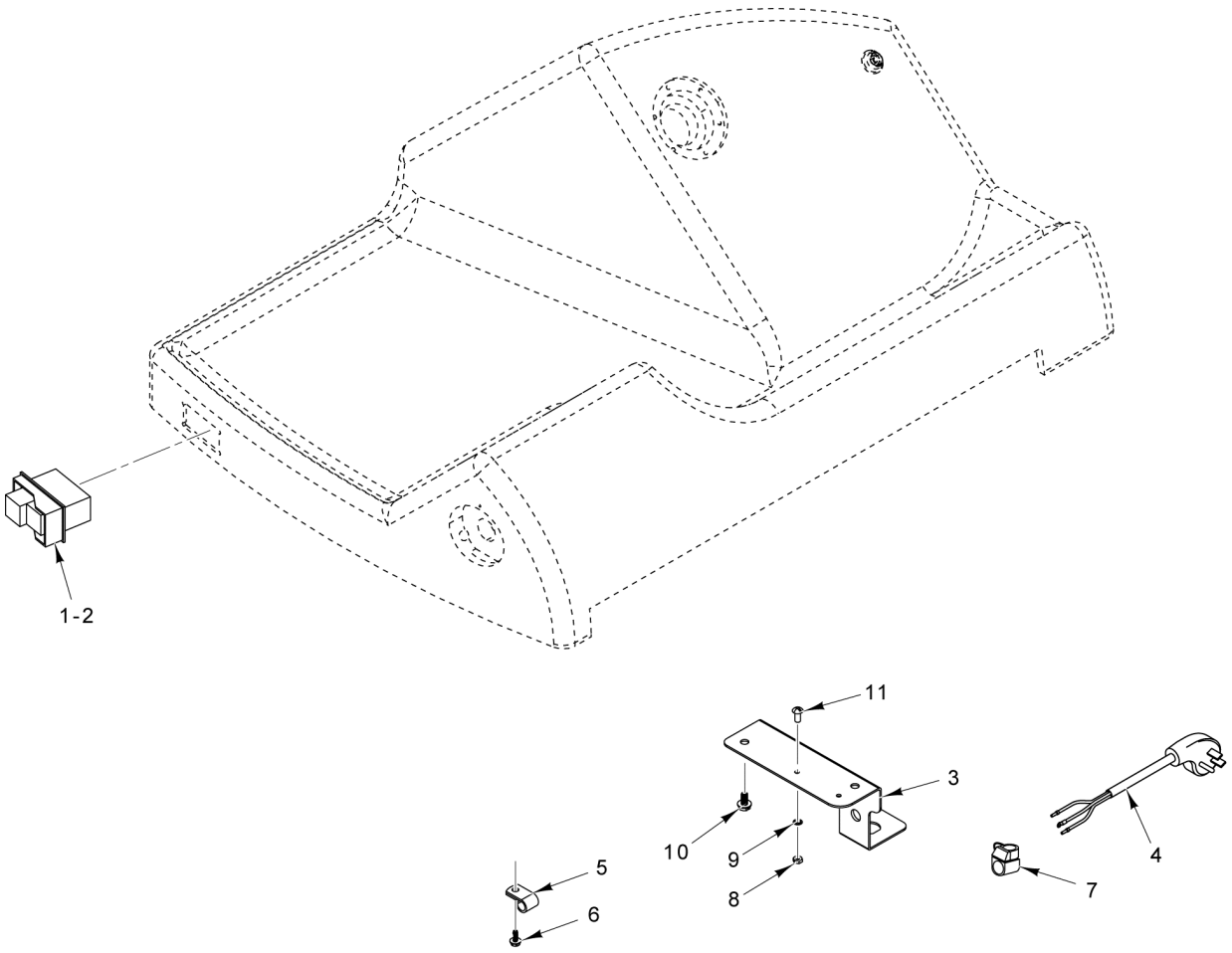

PL-60637

CONTROLS AND ELECTRICAL COMPONENTS

CONTROLS AND ELECTRICAL COMPONENTS

ILLUS. PL-60637	PART NO.	NAME OF PART	AMT.
1	00-087711-00360	Switch (On/Off)	1
2	00-915731	Boot - Switch	1
3	00-915359	Bracket - Strain Relief	1
4	00-117542-00121	Cord & Plug Assy. (120 V.)	1
5	00-078752-00003	Clamp - Cable	AR
6	SD-038-16	Self-Tapping Screw 6-32 x 3/8 Hex Washer Hd., Type RL	AR
7	FE-021-21	Strain Relief	1
8	NS-010-11	Nut 8-32 Hex (Brass)	1
9	WL-010-01	Lockwasher #8 External Shakeproof	1
10	SD-039-68	Self-Tapping Screw 10-24 x 3/8 Hex Washer Hd., Type RL	2
11	SC-027-29	Mach. Screw 8-32 x 3/8 Slotted Rd. Hd. (Brass)	1

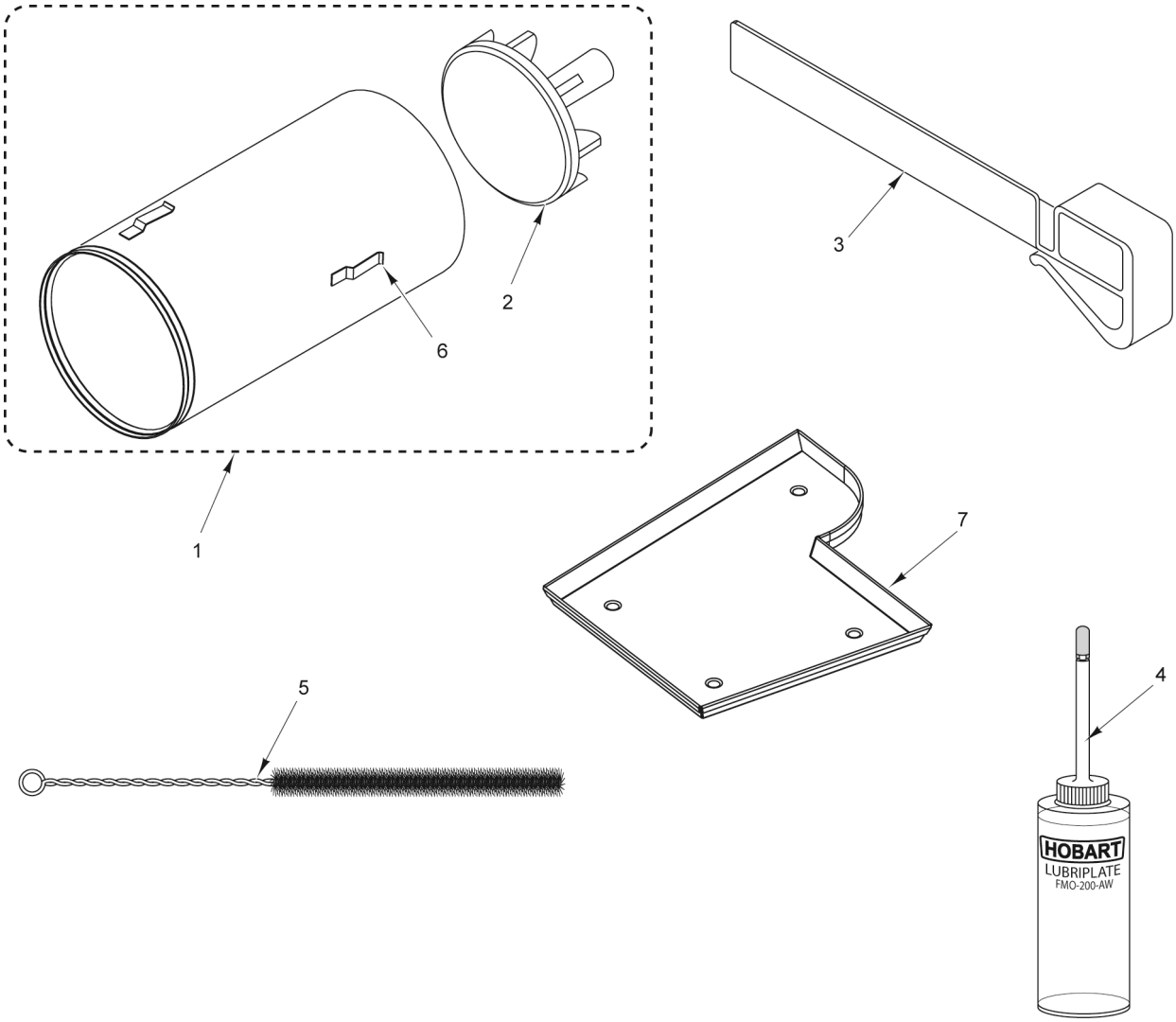

PL-60639

ACCESSORIES

ACCESSORIES

ILLUS. PL-60639	PART NO.	NAME OF PART	AMT.
1	00-915593	Food Chute Assy. (Packaged) (Incls. Item 2)	1
2	00-075945	Pusher Assy. - Plate	1
3	00-915266	Fence - Product	1
4	00-437905	Bottle - Oil (4 Oz.)	1
5	00-915643	Brush - Tube	1
6	PB-005-38	Cap 0.062 x 0.500 (Vinyl)	2
7	00-937646	Tray - Slicer (SS)	1