CATALOG OF REPLACEMENT PARTS



HTi SERIES SCALES

ML-29350	HTi-7LS
ML-29351	HTi-LS
ML-29352	HTiP-LS
ML-29354	HTi-7ELS
ML-29380	HTi-7LS2
ML-29381	HTi-LS2
ML-29382	HTiP-LS2
ML-29384	HTi-7ELS2
ML-29377	HTi-10ELS2
ML-29369	HTi-7LH
ML-29370	HTi-LH
ML-29371	HTiP-LH
ML-29372	HTi-7ELH
ML-29368	HTi-10ELH

Models with ARK Board, Linerless Cassette and Label Cutter

ML-29433	HTi-LH5
ML-29434	HTi-7LH5
ML-29435	HTiP-LH5
ML-29449	HTi-7ELH5

PREVIOUS MLS COVERED IN THIS CATALOG

ML-29367	HTi-10ELS

A product of HOBART 701 S. RIDGE AVENUE TROY, OHIO 45374-0001

FORM 43281 Rev. R (December 2025)

 © HOBART 2025

Table of Contents

5 OPERATOR CONSOLE
7 CUSTOMER DISPLAY (ML-29350, ML-29369, & ML-29380)
9 WITHOUT CUSTOMER DISPLAY (ML-29351, ML-29354, ML-29367, ML-29368, ML-29370, ML-29372, ML-29377, ML-29381 & ML-29354)
11 WEIGHER COMPONENTS
13 PLATTERS AND FISH PAN
15 SYSTEM BOARDS (CONTROL / PERIPHERAL PCB)
17 SYSTEM BOARD (ARA)
19 SYSTEM BOARD (ARK) -5 UNITS PRIOR TO SN 451273551
21 SYSTEM BOARD (ARA) -5 W/CUTTER - UNITS STARTING SN 451273551 (HTI-5 ONLY) (BEGINNING WITH SN# 45-1273-551)
23 ELEVATED DISPLAY (10 IN.)
25 POWER SUPPLY
27 PRINTER
31 CASSETTE (WIDE LABEL)
33 CASSETTE (NARROW LABEL)
35 CASSETTE (LINERLESS)
37 LABEL CUTTER KIT
39 LABEL CUTTER ASSEMBLY (ARK)
41 LABEL CUTTER ASSEMBLY (ARA)
43 PRINTER ONLY (ML-29352, ML-29371, & ML-29382)
45 ELEVATED DISPLAY (7 IN.)
47 SCALE UNIT (USED WITH TWO-PIECE SCALE/PRINTER) (PREVIOUS CONSTRUCTION)
49 SCALE UNIT (CURRENT CONSTRUCTION) (STARTING S/N 451274135)
51 CABLES - CONNECTOR BOARD (SYSTEM CONTROL / PERIPHERAL BOARD) (GREEN PCB)
53 CABLES - CONNECTOR BOARD (SYSTEM CONTROL / PERIPHERAL BOARD) (BLUE / BLACK PCB)
55 CABLES - CONNECTOR BOARD (ARA SYSTEM CONTROL BOARD) (GREEN PCB)
57 CABLES - CONNECTOR BOARD (ARA SYSTEM CONTROL BOARD) (BLUE / BLACK PCB)
59 CABLES - PANEL MOUNT (SYSTEM CONTROL / PERIPHERAL BOARD) (BLUE / BLACK PCB)
61 CABLES - PANEL MOUNT (ARA SYSTEM CONTROL BOARD)
63 CABLES - PANEL MOUNT (ARK SYSTEM CONTROL BOARD)

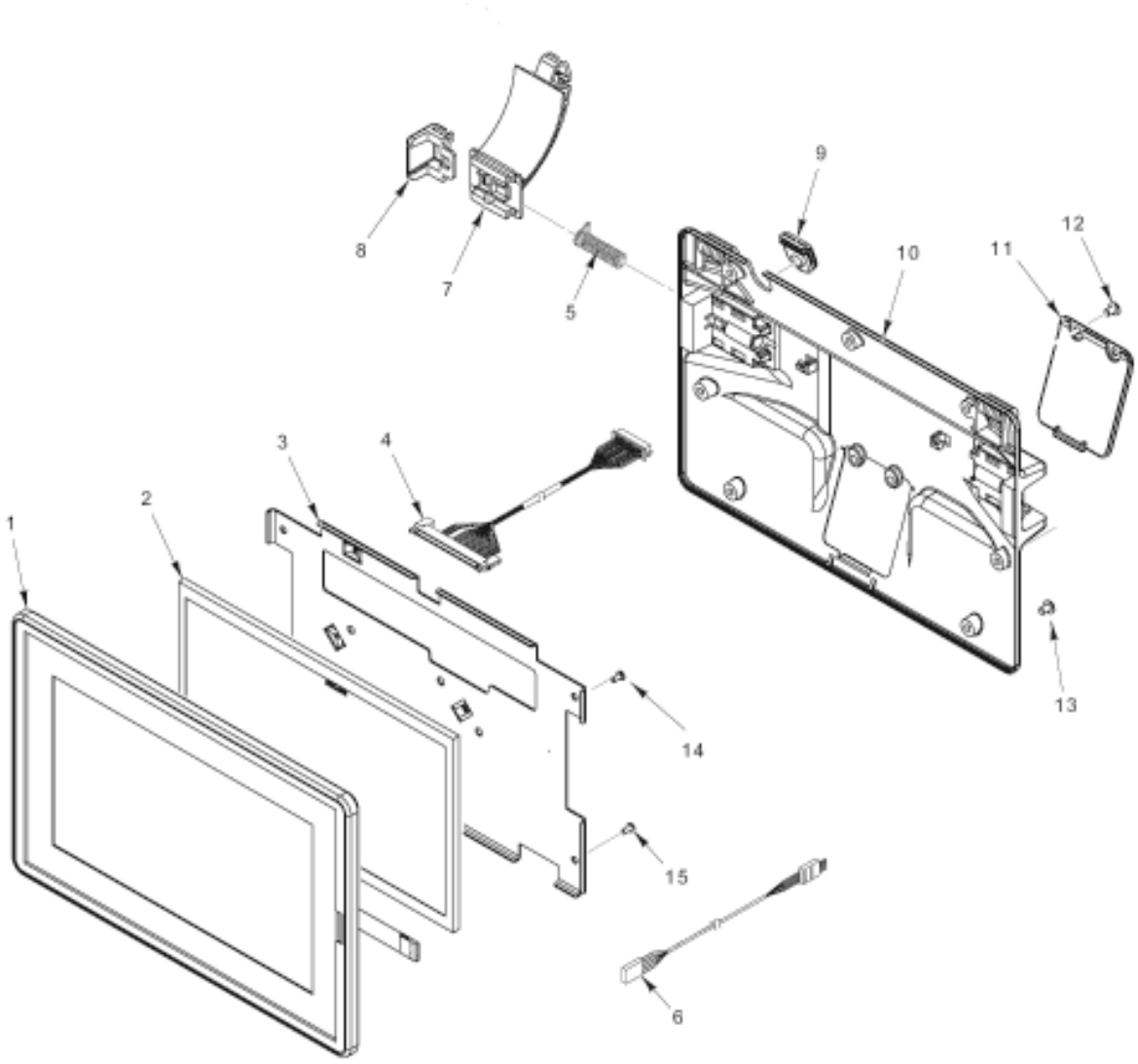

OPERATOR CONSOLE

OPERATOR CONSOLE

ILLUS. PL-60270	PART NO.	NAME OF PART	AMT.
1	00-447080	Touchscreen Housing Assembly	1
2	00-447157	Display (10.1 In.) (TFT) (WVGA LED)	1
3	00-447813	Bracket Assy. - Display Mounting	1
4	00-447095	Cable Assy. (Operator Display LVDS)	1
5	00-449993	Spring - Latch Return	2
6	00-447167	Cable Assy. (Touchscreen)	1
7	00-447039	Arm - Console Latch	2
8	00-447040	Button - Console Latch	2
9	00-447038	Grommet	1
10	00-447018	Housing - Console Rear (Black)	1
11	00-447076	Plate - Scanner Cover (Black)	1
12	SC-018-30	Mach. Screw 8-32 x 1/4 Phil. Pan Hd	2
13	SC-018-30	Mach. Screw 8-32 x 1/4 Phil. Pan Hd	7
14	SC-018-28	Mach. Screw 6-32 x 1/4 Phil. Pan Hd	2
15	SC-018-28	Mach. Screw 6-32 x 1/4 Phil. Pan Hd	4
16	00-255502	Tie - Cable Locking	AR
17	00-913108	Stylus (With Hobart Service Logo)	1

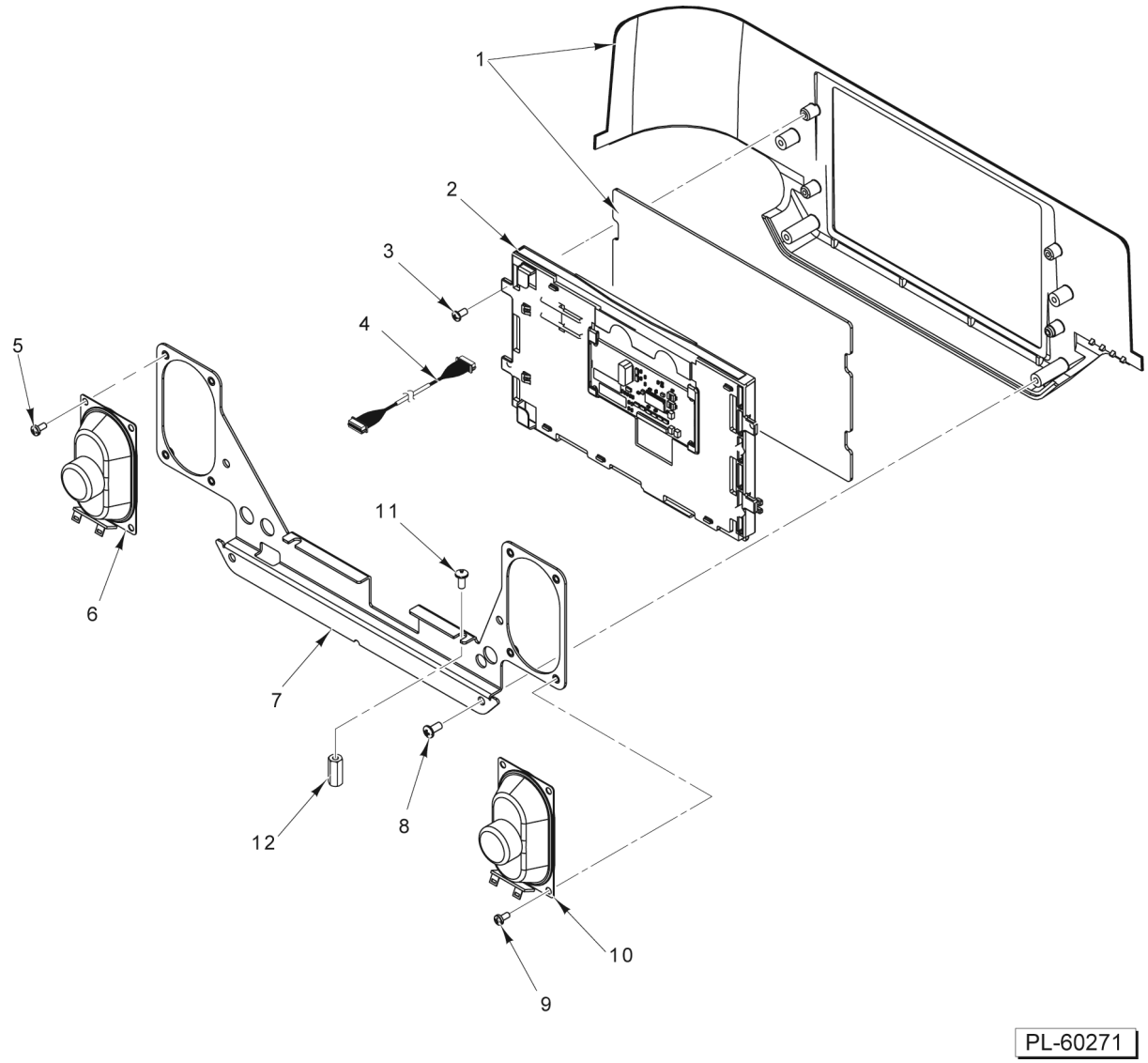

CUSTOMER DISPLAY
(ML-29350, ML-29369, & ML-29380)

CUSTOMER DISPLAY
(ML-29350, ML-29369, & ML-29380)

ILLUS. PL-60271	PART NO.	NAME OF PART	AMT.
1	00-449178	Housing Assy, Customer Display	1
2	00-447081	Display Assy. (7 In.)	1
3	SD-033-14	Self-Tapping Screw 4-20 x 1/4 Phil. Pan Hd. Plastite	4
4	00-447032	Cable Assy. (Customer Display) (LVDS)	1
5	SC-018-28	Mach. Screw 6-32 x 1/4 Phil. Pan Hd	4
6	00-447030	Speaker Assy	1
7	00-447063	Bracket - Speaker Mounting	1
8	SD-037-71	Self-Tapping Screw 6-19 x 5/16 Phil. Pan Hd., (Plastite)	4
9	SC-018-28	Mach. Screw 6-32 x 1/4 Phil. Pan Hd	4
10	00-447030	Speaker Assy	1
11	SA-021-52	Mach. Screw Assy. 8-32 x 7/8 Phil. Pan Hd	2
12	00-446929	Spacer - Mounting (GCD)	2

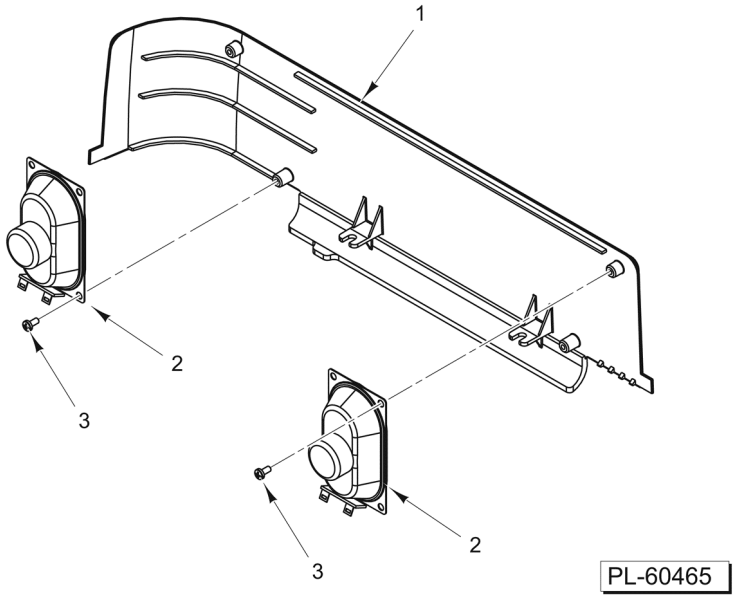

WITHOUT CUSTOMER DISPLAY
(ML-29351, ML-29354, ML-29367, ML-29368, ML-29370, ML-29372, ML-29377, ML-29381 & ML-29354)

WITHOUT CUSTOMER DISPLAY
(ML-29351, ML-29354, ML-29367, ML-29368, ML-29370, ML-29372, ML-29377, ML-29381 & ML-29354)

ILLUS. PL-60465	PART NO.	NAME OF PART	AMT.
1	00-447052	Panel - Housing Filler	1
2	00-447030	Speaker Assy	2
3	SD-015-41	Self-Tapping Screw 8-32 x 1/2 Phil. Pan Hd., Type TT	4

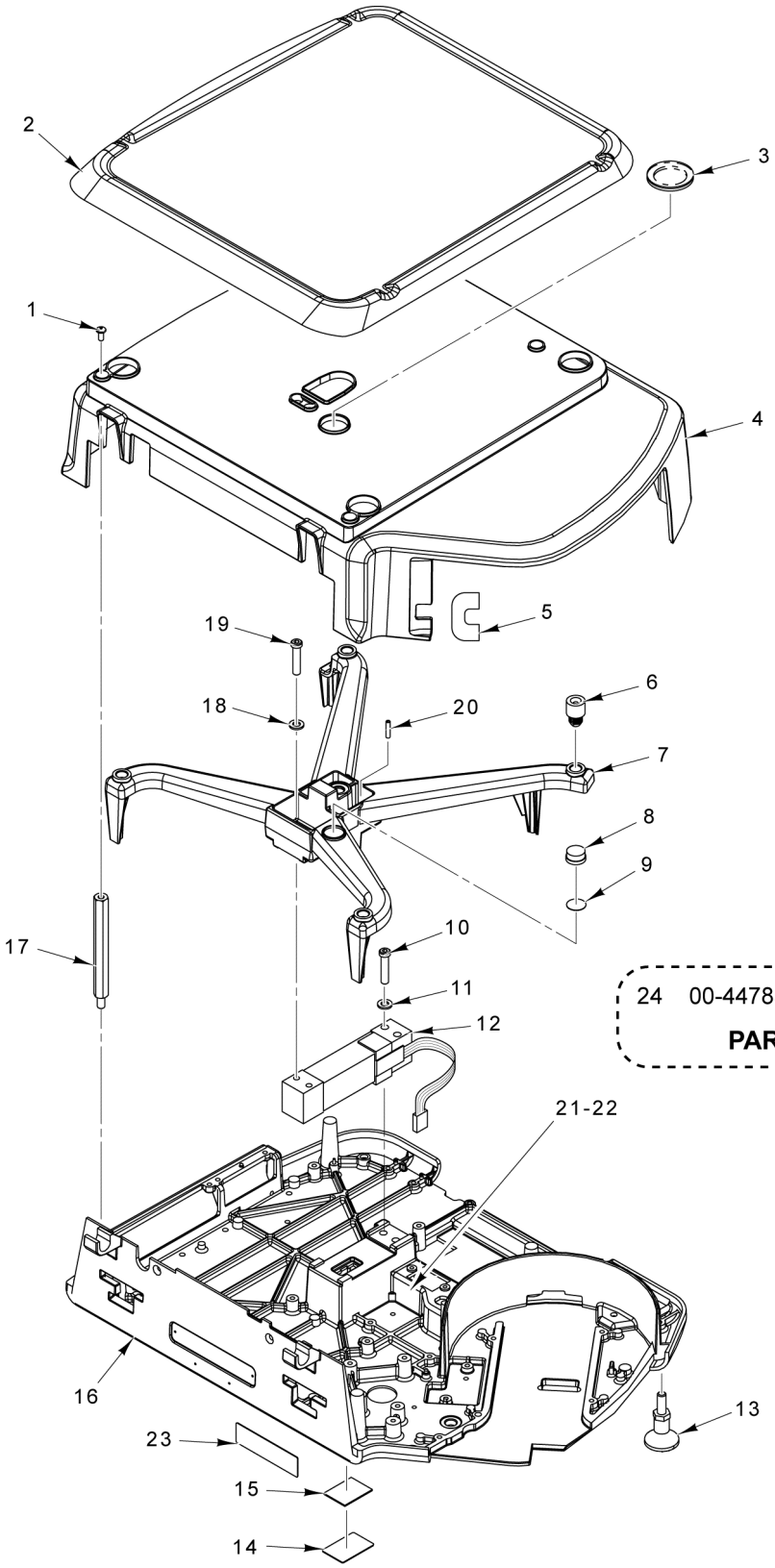

24 00-447831 Label - Cable Identification

PART NOT ILLUSTRATED

PL-60509

WEIGHER COMPONENTS

WEIGHER COMPONENTS

ILLUS. PL-60509	PART NO.	NAME OF PART	AMT.
1	SC-129-33	Mach. Screw 8-32 x 3/8 Phil. Pan Hd	4
2	00-447083	Platter Assy	1
3	00-441243	Cover - Level Bubble (Incls. Foam Gasket)	1
4	00-447050	Housing - Main (Black)	1
5	00-447058	Shield - Infrared	1
6	00-043319	Mount - Platter	5
7	00-043302	Platter - Sub	1
8	00-043112	Level - Spirit	1
9	00-043257	Tape - Level	1
10	SC-120-70	Cap Screw 1/4-20 x 1-5/8 Hex Socket Hd	2
11	WL-008-17	Lockwasher 1/4 Internal	2
12	00-443075	Load Cell - Multiple Range (15 kg)	1
13	00-447055	Foot Assy	4
14	00-043389	Plate - Remote Weigher	1
15	00-043256	Tape	1
16	00-444750-00005	Base - Main	1
17	00-043318	Standoff (Housing Mount)	4
18	WL-008-17	Lockwasher 1/4 Internal	2
19	SC-120-70	Cap Screw 1/4-20 x 1-5/8 Hex Socket Hd	2
20	00-043286	Screw - Overload (Stop)	2
21	00-043256	Tape	1
22	00-043390	Plate - SM Port	1
23	00-184336	Label - Interference Warning	1
24	00-447831	Label - Cable Identification	1

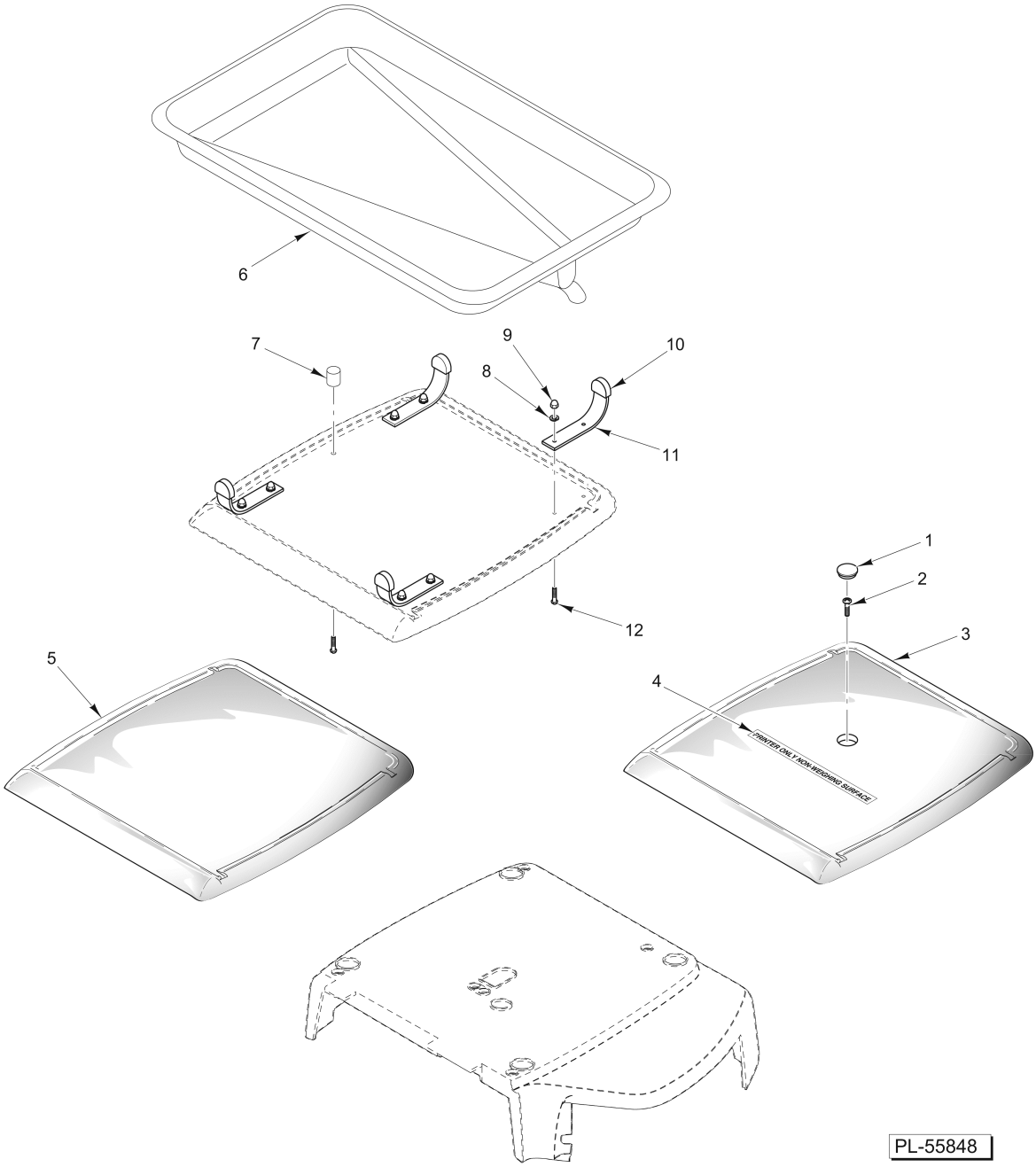

PLATTERS AND FISH PAN

PLATTERS AND FISH PAN

ILLUS. PL-55848	PART NO.	NAME OF PART	AMT.
1	00-445214-00001	Plug - Cover	1
2	SC-018-31	Mach. Screw 8-32 x 3/8 Phil. Pan Hd	1
3	00-445262-00001	Cover - Printer Top (Gray) (All Printer Only and Hanging Scale Models)	1
4	00-043297	Label - Non-Weighing Surface (ML-28889)	1
5	00-043304	Platter Assy. (All Scale/Printer Models)	1
6	00-183358	Kit - Fish Pan & Arms (Incls. Items 7 thru 12)	1
7	00-044898	Bumper - Fish Pan	1
8	WL-006-42	Lockwasher #6 Medium (SST)	8
9	NS-046-33	Crown Nut 6-32 (SST)	8
10	00-013999-00001	Tip - Pan Holder	4
11	00-184185	Arm Assy. (Incls. Item 10)	1
12	SC-111-31	Mach. Screw 6-32 x 5/16 Slotted Truss Hd. (SST)	9

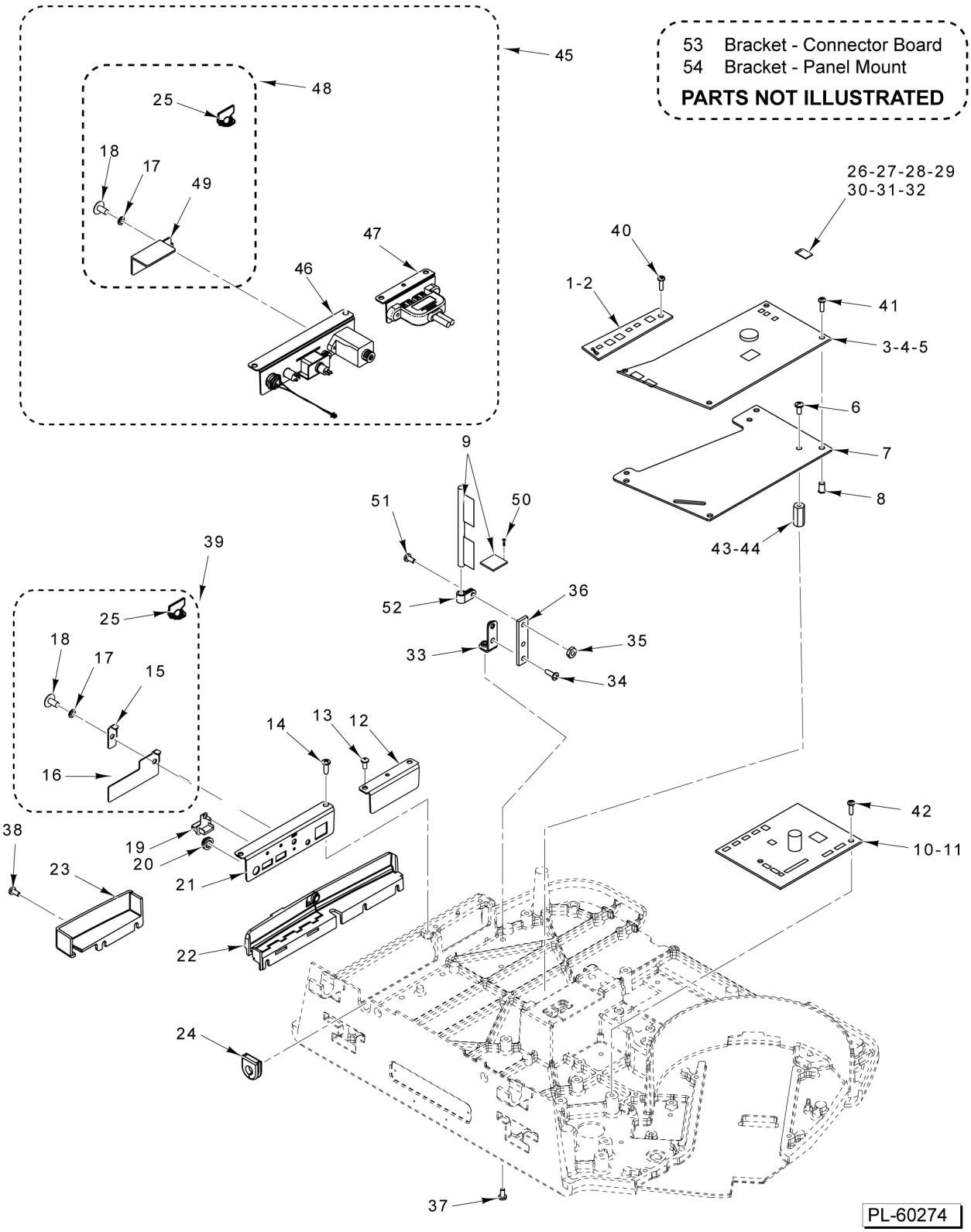

SYSTEM BOARDS
(CONTROL / PERIPHERAL PCB)

SYSTEM BOARDS
(CONTROL / PERIPHERAL PCB)

ILLUS. PL-60274	PART NO.	NAME OF PART	AMT.
1	00-447155	Board - Connector (Green) (Before Serial No. 451108134)	1
2	00-447720	Board - Connector (Black) (Starting Serial No. 451108134)	1
3	00-447158	Board - System Control (Green) (Before Serial No. 451113631)	1
4	00-448248	Board - System Control (Blue) (Starting Serial No. 451113631)	1
*5	00-449460	Board - System Control (Blue)	1
6	SC-129-33	Mach. Screw 8-32 x 3/8 Phil. Pan Hd	4
7	00-447012	Bracket Assy. - Main Board	1
8	00-047080-00019	Insert	5
9	00-449162	Kit - WiFi Module and Antenna (Must replace as set)	1
10	00-447152	Board - Peripheral Control (Green) (Before Serial No. 451108110)	1
11	00-447780	Board - Peripheral Control (Black) (Starting Serial No. 451108110)	1
12	00-447069	Bracket - GCB Blank	1
13	SD-015-40	Self-Tapping Screw 8-32 x 3/8 Phil. Pan Hd., Type TT	2
14	SD-015-40	Self-Tapping Screw 8-32 x 3/8 Phil. Pan Hd., Type TT	2
15	00-447088	Plate - Security	1
16	00-447067	Plate - USB Cover	1
17	WL-003-12	Lockwasher #8 Helical	1
18	00-183906	Screw (Special Fil. Hd.)	1
19	00-443581	Plug - USB Type A	2
20	00-443606	Seal - Power / Reset Button	1
21	00-447068	Cover - Connector	1
22	00-447070	Cover - Connector Assy. (Optional)	1
23	00-447059	Cover - Network	1
24	00-447046	Grommet	1
25	00-444424	Seal - Wire Roto (8 In.)	1
26	00-447164-00014	Micro SD (Programmed) (8GB) (Version 1.12.0)	1
27	00-447907-00008	Micro SD (Programmed) (16GB) (Version 2.3.0)	1
28	00-448959-00002	Micro SD (Programmed) (16GB) (Version 2.5.0)	1
**29	00-448959-00004	Micro SD (Programmed) (16GB) (Version 2.6.0)	1
*30	45-000604-00003	Micro SD (Programed) (16GB) (Version 4.2.000)	1
*31	00-450134-00004	Micro SD (Programmed) (16GB) (Version 4.1.300)	1
*32	45-000057-00002	Micro SD (Programmed) (16GB) (Version 3.3.680) (Walmart/Sam's Club Only)	1
33	00-447087	Bracket - Antenna	1
34	SC-129-33	Mach. Screw 8-32 x 3/8 Phil. Pan Hd	2
35	NS-031-07	Stop Nut 8-32 Hex	1
36	00-447086	Isolator - Antenna	1
37	SD-015-40	Self-Tapping Screw 8-32 x 3/8 Phil. Pan Hd., Type TT	1
38	SD-039-75	Self-Tapping Screw 8-32 x 3/8, Type TT (Black)	3
39	00-448181	Kit - Security (Incls. Items 15, 16, 17, 18 & 25)	1
40	SC-129-33	Mach. Screw 8-32 x 3/8 Phil. Pan Hd	2
41	SC-112-42	Mach. Screw 6-32 x 1/2 Phil. Pan Hd	5
42	SC-129-33	Mach. Screw 8-32 x 3/8 Phil. Pan Hd	2
43	00-442649	Standoff (3/8 x 7/8)	4
44	00-448189	Standoff (3/8 x 1-1/2) (Used in Panel Mount Bracket Applications)	4
45	00-448274	Kit - Service (Panel Mount) (Incls. Items 46, 47, & 48)	1
46	00-448030	Bracket Assy. (Panel Mount)	1
47	00-448056	Bracket Assy. (USB Panel Mount)	1
48	00-448245	Kit - Security Seal (With Security Plate) (Incls. Items 17, 18, 24, & 49)	1
49		Plate - Security (Part Of Item 48)	1
50	SC-132-06	Screw - Mach M2 X 0.4 X 4MM	2
51	SD-015-40	Self-Tapping Screw 8-32 x 3/8 Phil. Pan Hd., Type TT	1
52	00-447108	Clamp P	1
53	00-447803	Bracket - Connector Board (Single USB)	1
54	00-448039	Bracket, Panel Mount (Single USB)	1

* Use only in scales where application V3.0 or higher is currently installed
** Only use where 2.6 is currently installed

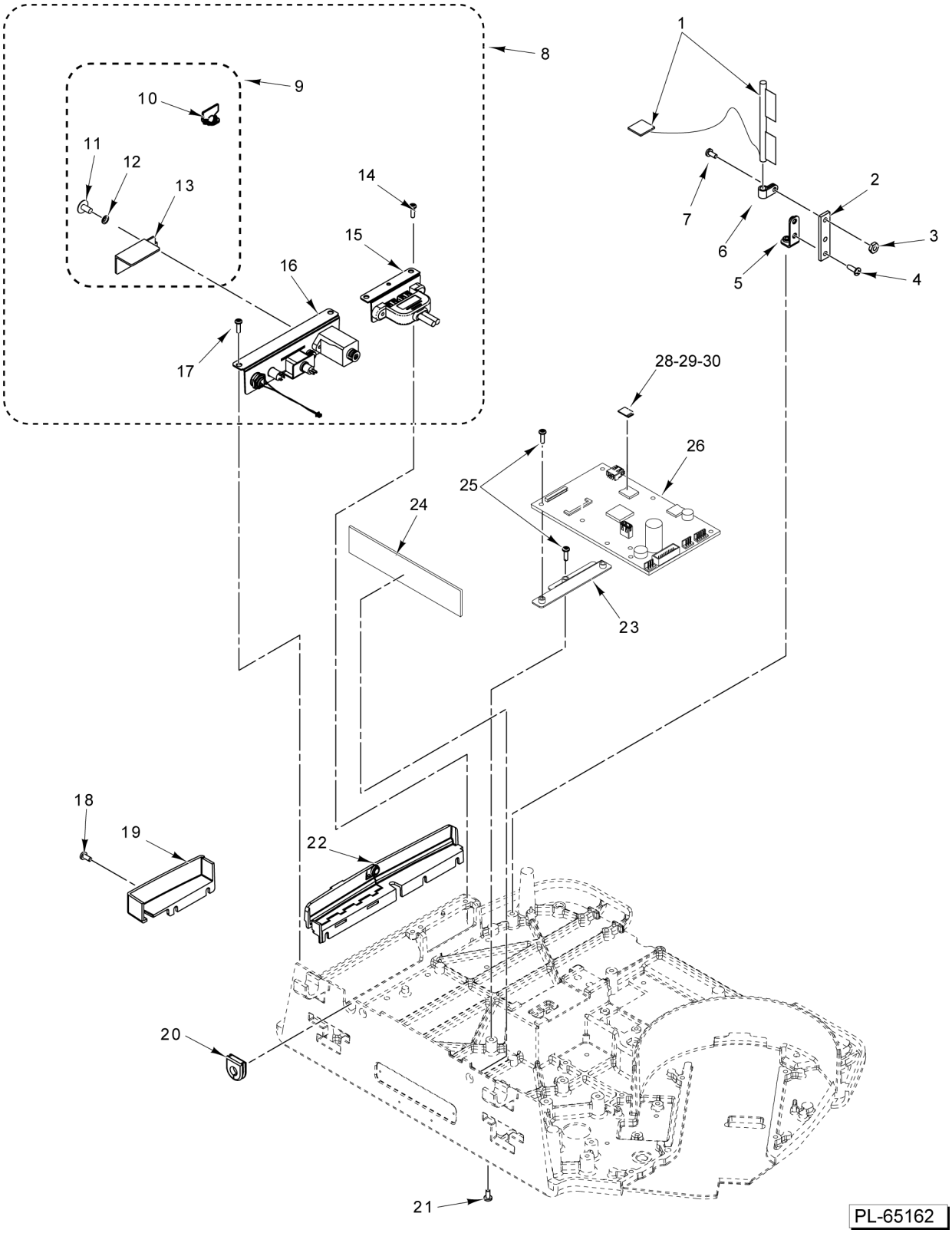

SYSTEM BOARD (ARA)

SYSTEM BOARD (ARA)

ILLUS. PL-65162	PART NO.	NAME OF PART	AMT.
1	00-449711	Kit - Wifi Module & Antenna (Must be replaced as set) (Use with ARA board only)	1
2	00-447086	Isolator - Antenna	1
3	NS-031-07	Stop Nut 8-32 Hex	1
4	SC-129-33	Mach. Screw 8-32 x 3/8 Phil. Pan Hd	2
5	00-447087	Bracket - Antenna	1
6	00-447108	Clamp P	1
7	SD-015-40	Self-Tapping Screw 8-32 x 3/8 Phil. Pan Hd., Type TT	1
8	00-448274	Kit - Service (Panel Mount) (Incls. Items 9 & 14 thru 17)	1
9	00-448245	Kit - Security Seal (With Security Plate) (Incls. Items 10 thru 13)	1
10	00-444424	Seal - Wire Roto (8 In.)	1
11	00-183906	Screw (Special Fil. Hd.)	1
12	WL-003-12	Lockwasher #8 Helical	1
13		Plate - Security (Part Of Item 9)	1
14	SD-015-40	Self-Tapping Screw 8-32 x 3/8 Phil. Pan Hd., Type TT	2
15	00-448056	Bracket Assy. (USB Panel Mount)	1
16	00-448030	Bracket Assy. (Panel Mount)	1
17	SD-015-40	Self-Tapping Screw 8-32 x 3/8 Phil. Pan Hd., Type TT	2
18	SD-039-75	Self-Tapping Screw 8-32 x 3/8, Type TT (Black)	3
19	00-447059	Cover - Network	1
20	00-447046	Grommet	1
21	SD-015-40	Self-Tapping Screw 8-32 x 3/8 Phil. Pan Hd., Type TT	1
22	00-447070	Cover - Connector Assy. (Optional)	1
*23	00-448321	Bracket - ARA Board	1
24	00-449512	Board - Touchscreen Control (For scales with ARA board only)	1
25	SC-112-42	Mach. Screw 6-32 x 1/2 Phil. Pan Hd	5
26	00-448420	Board - System Control (ARA - Dual)	1
27	00-448039	Bracket, Panel Mount (Single USB)	1
**28	00-450134-00004	Micro SD (Programmed) (16GB) (Version 4.1.300)	1
***29	45-000604-00003	Micro SD (Programed) (16GB) (Version 4.2.000)	1
**30	45-000057-00003	Micro SD (Programmed) (16GB) (Version 3.3.690) (HTi-LHxW, HTi-7xW, & HTiP-LHxW only)	1

* ARA System Control PCB Retrofit Only
** Use only in scales where application V3.0 or higher is currently installed
*** ARA System Control Board

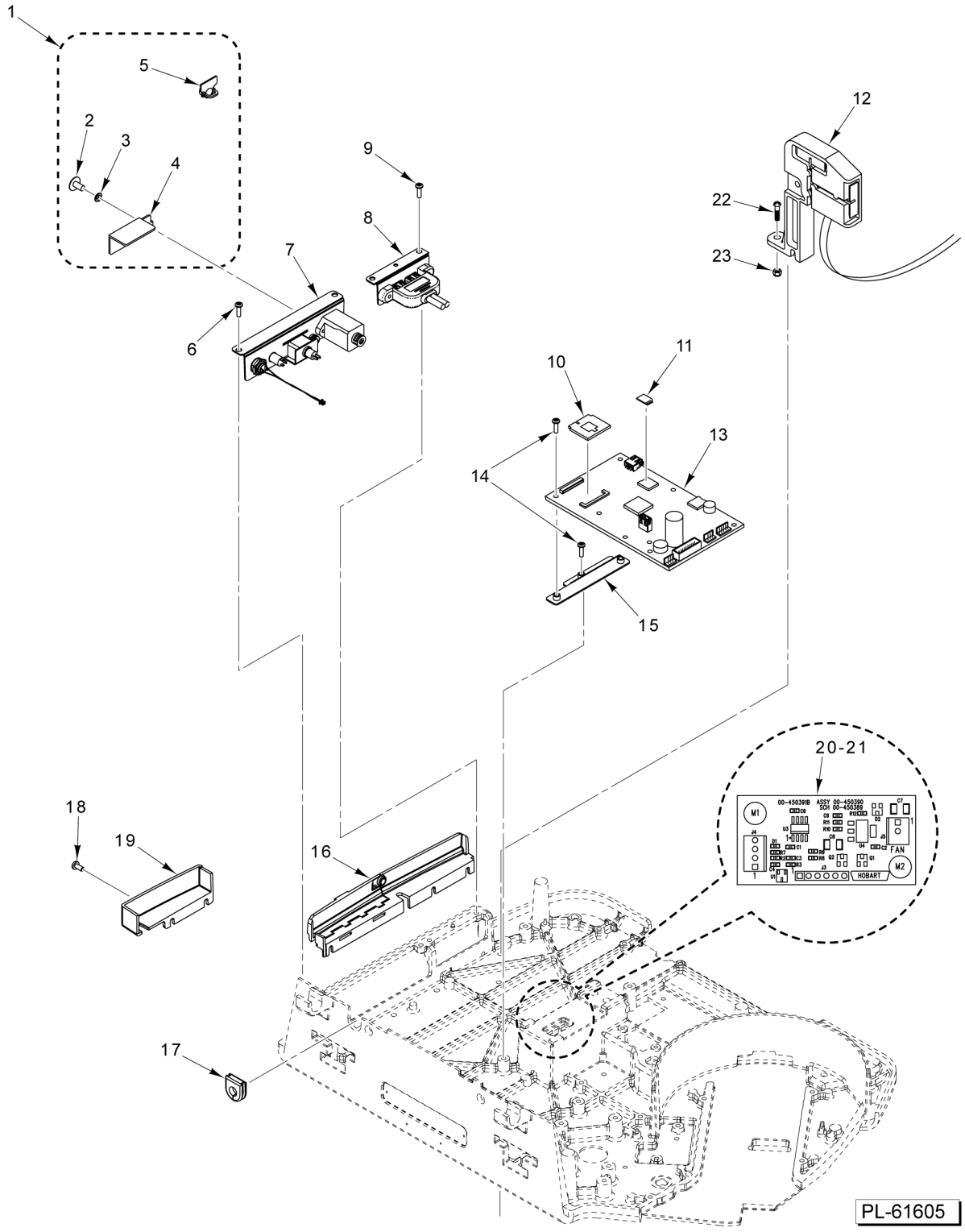

SYSTEM BOARD
(ARK) -5 UNITS PRIOR TO SN 451273551

SYSTEM BOARD
(ARK) -5 UNITS PRIOR TO SN 451273551

ILLUS. PL-61605	PART NO.	NAME OF PART	AMT.
1	00-448245	Kit - Security Seal (With Security Plate) (Incls. Items 2 thru 5)	1
2	00-183906	Screw (Special Fil. Hd.)	1
3	WL-003-12	Lockwasher #8 Helical	1
4		Plate - Security (Part Of Item 1)	1
5	00-444424	Seal - Wire Roto (8 In.)	1
6	SD-015-40	Self-Tapping Screw 8-32 x 3/8 Phil. Pan Hd., Type TT	2
7	00-448030	Bracket Assy. (Panel Mount)	1
8	00-448056		1
9	SD-015-40	Self-Tapping Screw 8-32 x 3/8 Phil. Pan Hd., Type TT	2
10	00-450011	Module (WiFi)	1
11	45-000019-00002	Micro SD, Programmed, HTm Series, 32G (Version 5.1.300)	1
12	45-000025	Kit - WIFI Module 802.11 AC	1
13	00-449970-00002	Board - System Control (ARK - Dual)	1
14	SC-112-42	Mach. Screw 6-32 x 1/2 Phil. Pan Hd	5
15	00-448321	Bracket - ARK Board	1
16	00-447070	Cover - Connector Assy. (Optional)	1
17	00-447046	Grommet	1
18	SD-039-75	Self-Tapping Screw 8-32 x 3/8, Type TT (Black)	3
19	00-447059	Cover - Network	1
20	00-450390	Control Board Assy. - Fan	1
21	00-043284	Fastener - Dual Lock	2
22	SC-018-34	Mach. Screw 8-32 x 1/2 Phil. Pan Hd	1
23	NS-047-15	Lock Nut 8-32 Flange	1

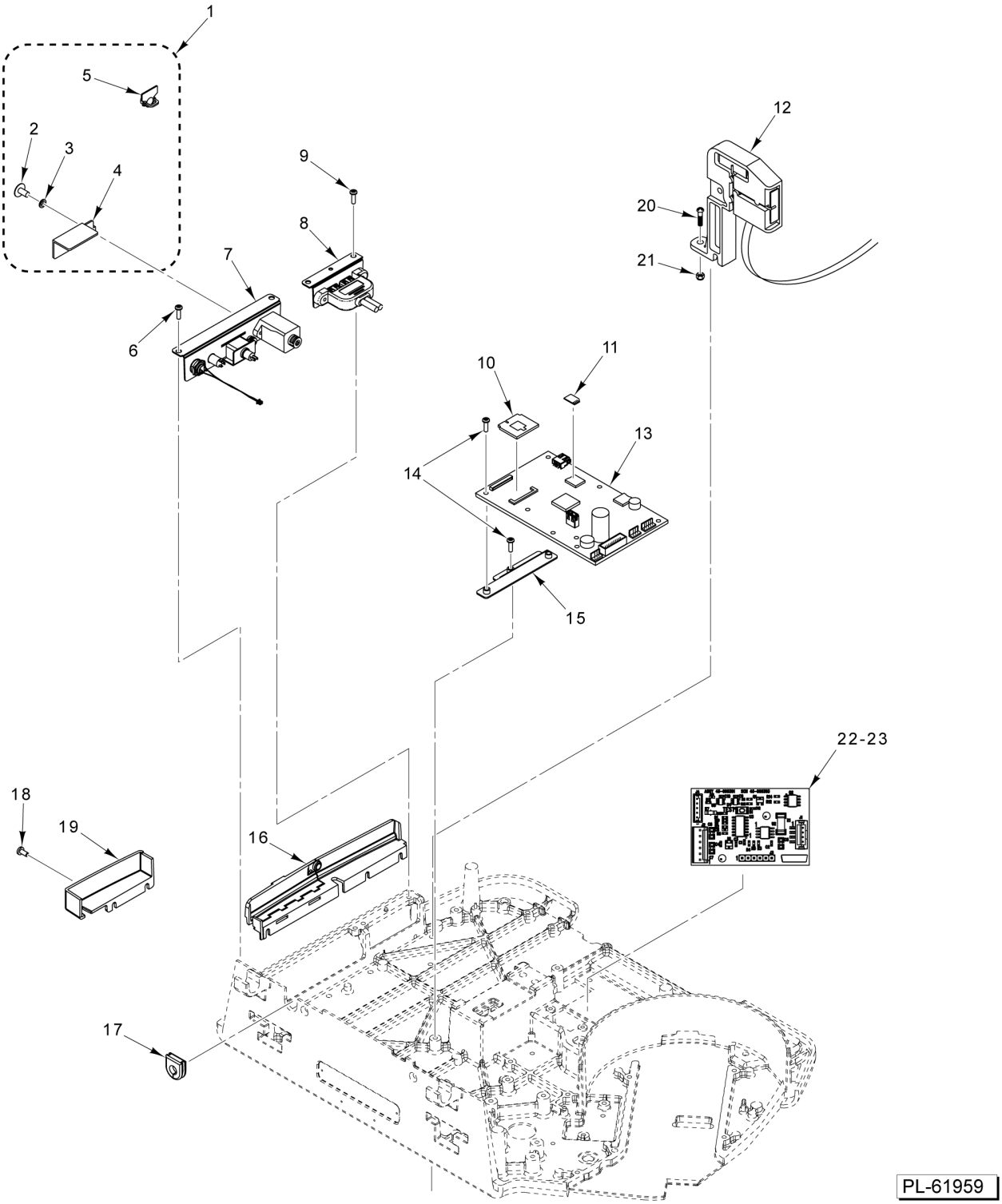

SYSTEM BOARD
(ARA) -5 W/CUTTER - UNITS STARTING SN 451273551
(HTI-5 ONLY)
(BEGINNING WITH SN# 45-1273-551)

SYSTEM BOARD
(ARA) -5 W/CUTTER - UNITS STARTING SN 451273551
(HTI-5 ONLY)
(BEGINNING WITH SN# 45-1273-551)

ILLUS. PL-61959	PART NO.	NAME OF PART	AMT.
1	00-448245	Kit - Security Seal (With Security Plate) (Incls. Items 2 thru 5)	1
2	00-183906	Screw (Special Fil. Hd.)	1
3	WL-003-12	Lockwasher #8 Helical	1
4		Plate - Security (Part Of Item 1)	1
5	00-444424	Seal - Wire Roto (8 In.)	1
6	SD-015-40	Self-Tapping Screw 8-32 x 3/8 Phil. Pan Hd., Type TT	2
7	00-448030	Bracket Assy. (Panel Mount)	1
8	00-448056	Bracket Assy. (USB Panel Mount)	1
9	SD-015-40	Self-Tapping Screw 8-32 x 3/8 Phil. Pan Hd., Type TT	2
10	00-450011	Module (WiFi)	1
11	45-000472-00001	Micro SD, Programmed, HT Series (ARA) (Version 5.1.322)	1
12	45-000025	Kit - WIFI Module 802.11 AC	1
13	00-448420-00003	Board - System Control (ARA - Dual)	1
14	SC-112-42	Mach. Screw 6-32 x 1/2 Phil. Pan Hd	5
15	00-448321	Bracket - ARK Board	1
16	00-447070	Cover - Connector Assy. (Optional)	1
17	00-447046	Grommet	1
18	SD-039-75	Self-Tapping Screw 8-32 x 3/8, Type TT (Black)	3
19	00-447059	Cover - Network	1
20	SC-018-34	Mach. Screw 8-32 x 1/2 Phil. Pan Hd	1
21	NS-047-15	Lock Nut 8-32 Flange	1
22	45-000301	Board Assy. - Cutter	1
23	SC-018-68	Mach. Screw 4-40 x 1/4 Phil. Pan Hd	2

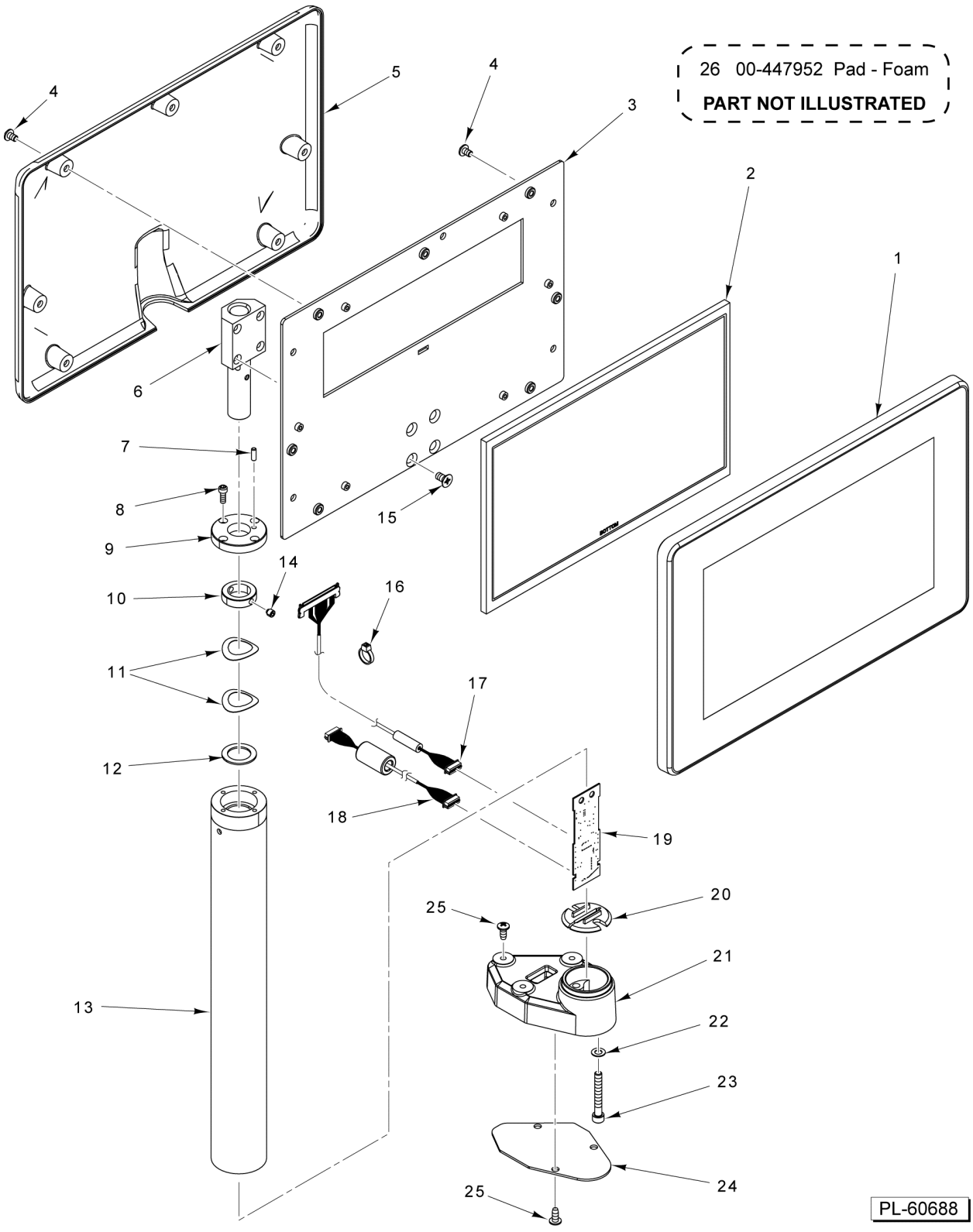

ELEVATED DISPLAY
(10 IN.)

ELEVATED DISPLAY
(10 IN.)

ILLUS. PL-60688	PART NO.	NAME OF PART	AMT.
1	00-448077	Housing Assy. (10 In.) (Front)	1
2	00-447157	Display (10.1 In.)	1
3	00-447943	Panel - Display Mounting	1
4	SC-018-30	Mach. Screw 8-32 x 1/4 Phil. Pan Hd	12
5	00-447929	Housing Assy. (Rear)	1
6	00-447148	Block Assy. - Pivot	1
7	00-447143	Pin - Dowel	1
8	SC-120-37	Cap Screw 6-32 x 3/8 Hex Socket Hd. (SST)	4
9	00-447710	Cap - Display Mount	1
10	00-447712	Collar	1
11	00-447714	Washer - Spring	2
12	00-447713	Washer - Thrust	1
13	00-447140	Tube - Display Mounting	1
14	SC-088-55	Set Screw 10-32 x 3/16 Hex Hdls., Half Dog Pt	2
15	SC-020-23	Mach. Screw 10-24 x 3/8 Phil. Flat Hd	4
16	00-251199	Tie - Cable (4 In. Long)	1
17	00-448047	Cable Assy. (19 In.) (Located Inside Post)	1
18	00-447192	Cable Assy. (30 In.) (Located Inside Scale)	1
19	00-447937	Board Assy. (Interconnect)	1
20	00-447686	Retainer (PCB)	1
21	00-447132	Base - Elevated Display	1
22	WL-008-13	Lockwasher #10 Internal Shakeproof	2
23	SC-124-37	Cap Screw 10-24 x 1-3/8 Hex Socket Hd	2
24	00-447131	Plate - Cover	1
25	SD-015-40	Self-Tapping Screw 8-32 x 3/8 Phil. Pan Hd., Type TT	6
26	00-447952	Pad - Foam (Cut in Half)	1

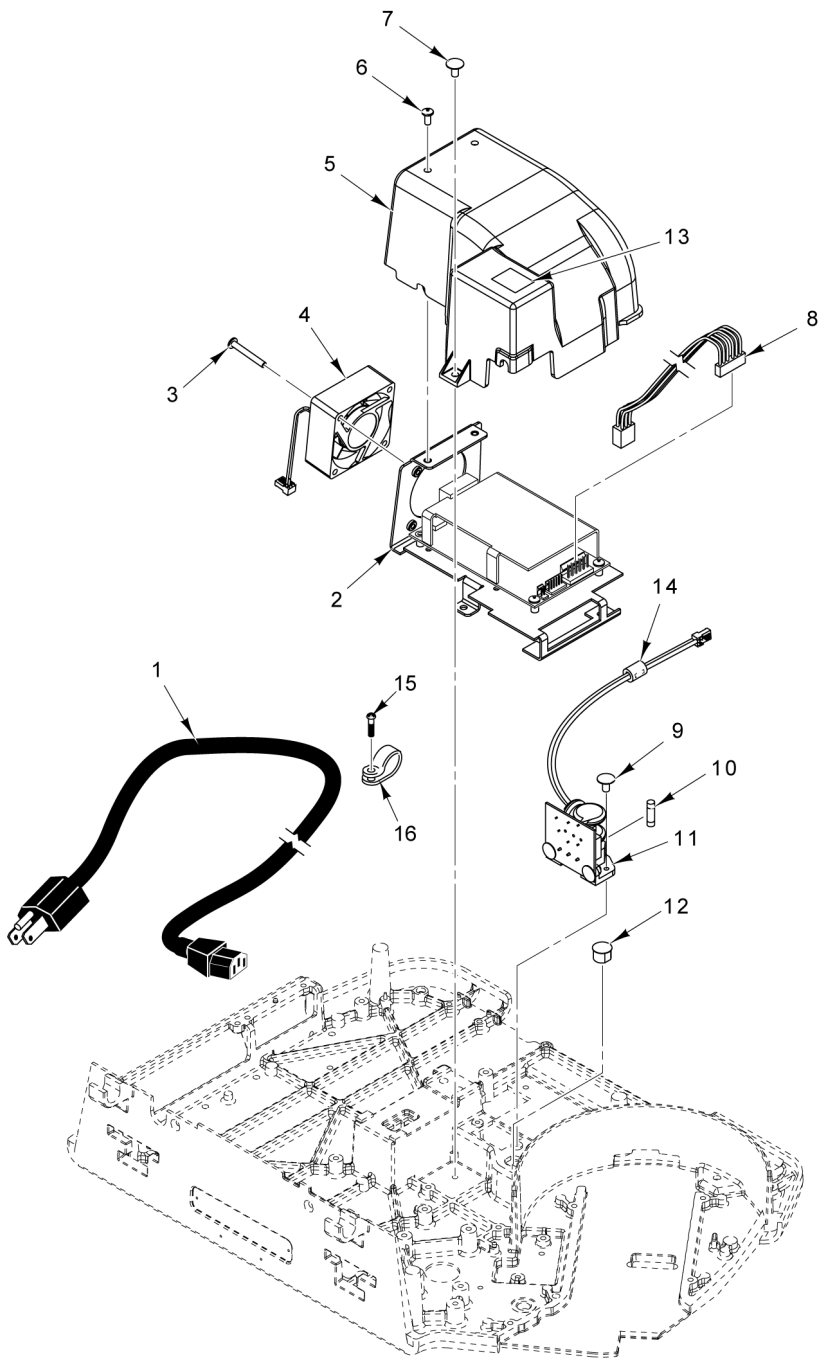

POWER SUPPLY

POWER SUPPLY

ILLUS. PL-60272	PART NO.	NAME OF PART	AMT.
1	00-044479	Cord - Power (120 V.)	1
2	00-444870-00002	Power Supply & Baffle Assy	1
3	SA-021-55	Mach Screw Assy 8-32 v 3/8 Cap Hd	2
4	00-444906	Fan Assy	1
5	00-444799	Shroud - Power Supply	1
6	SC-129-33	Mach. Screw 8-32 x 3/8 Phil. Pan Hd	2
7	SD-015-40	Self-Tapping Screw 8-32 x 3/8 Phil. Pan Hd., Type TT	1
8	00-444769	Cable Assy. - DC Power	1
9	SD-015-38	Self-Tapping Screw 6-32 x 3/8 Phil. Pan Hd., Type TT	2
10	FE-025-32	Fuse (250 V., 3.0 Amp.) (SLO) (Power Input Board)	1
11	00-448290	Board - Power Input (Incls. Item 10)	1
12	PB-005-28	Plug - Button (1/2 In.)	1
13	00-047052	Label - Fuse	1
14	00-447094	Ferrite (Clamp-On)	1
15	SD-015-41	Self-Tapping Screw 8-32 x 1/2 Phil. Pan Hd., Type TT	1
16	00-447108	Clamp P	1

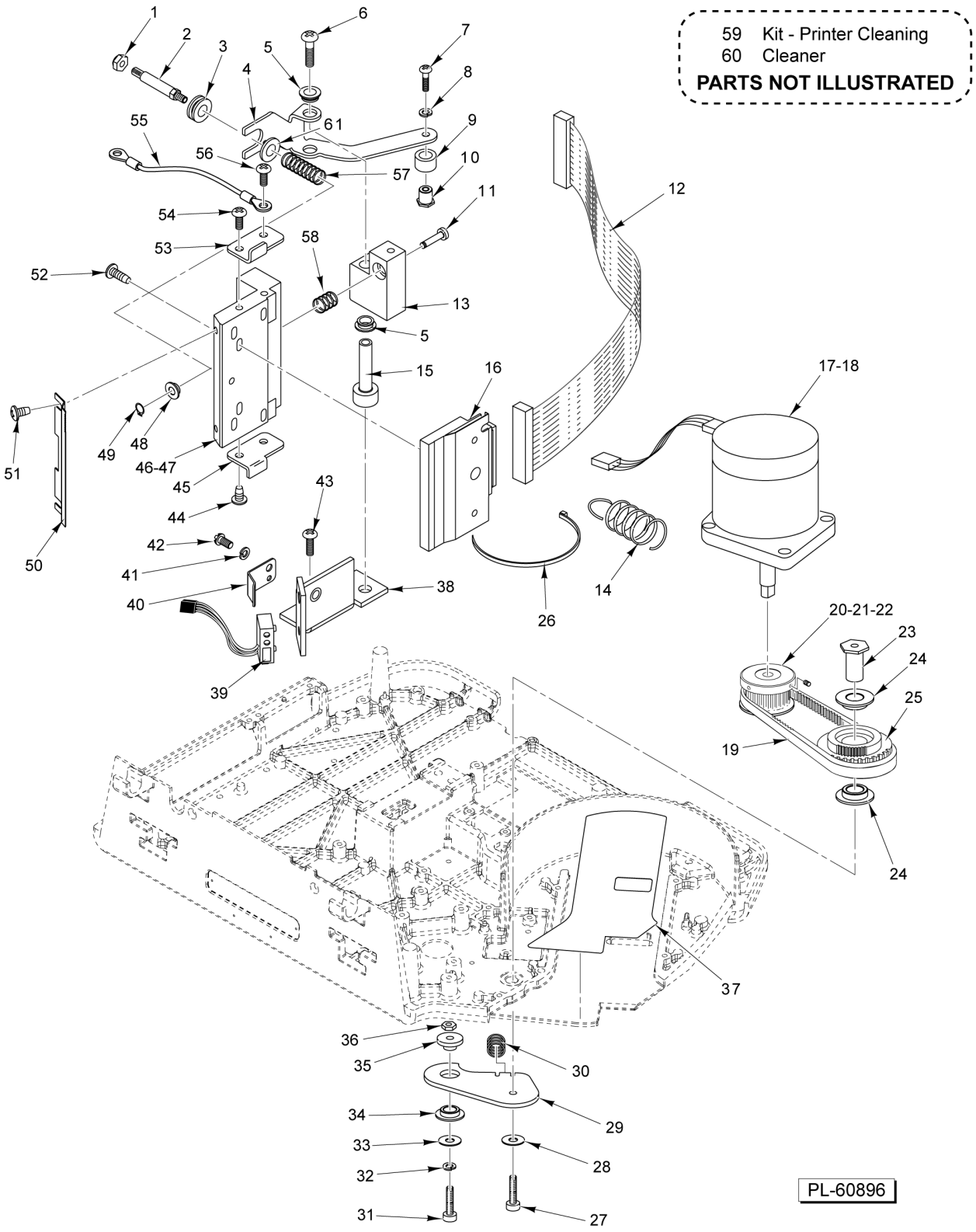
59 Kit - Printer Cleaning
60 Cleaner
PARTS NOT ILLUSTRATED
PL-60896

PRINTER

PRINTER

ILLUS. PL-60896	PART NO.	NAME OF PART	AMT.
1	NS-031-49	Stop Nut 10-32 Hex (SST)	1
2	00-043267	Stud - Adjusting	1
3	00-043382	Bushing - Stud	1
4	00-043299	Bracket - Spring Pivot	1
5	00-043253	Bushing - Nyliner	2
6	SD-038-05	Self-Tapping Screw 8-32 x 1-3/4 Phil. Pan Hd., Type TT	1
7	SC-018-31	Mach. Screw 8-32 x 3/8 Phil. Pan Hd	1
8	WL-008-07	Lockwasher #8 Internal Shakeproof	1
9	00-043385	Roller - Pivot Arm	1
10	00-043386	Retainer - Roller	1
11	00-047424	Shaft - Printhead Pivot	1
12	00-444846	Cable Assy. - Printhead	1
13	00-047423	Pivot Block - Printhead	1
14	00-043387	Spring - Extension	1
15	00-047441	Sleeve - Pivot	1
16	00-448003	Printhead - Thermal (Kyocera)	1
17	00-440142-00002	Motor Assy. - Stepper	1
18	SD-015-40	Self-Tapping Screw 8-32 x 3/8 Phil. Pan Hd., Type TT	3
19	00-442823	Belt - Timing	1
20	00-442822	Pulley - Take-Up Motor	1
21	SC-047-74	Set Screw 8-32 x 1/4 Hex Hdls. Cup Pt	2
22	00-512987	Adhesive (Loctite #222, Purple)	AR
23	00-441758	Shaft - Pulley & Gear	1
24	00-043365	Bushing	2
25	00-043250	Pulley & Gear Assy. (Incls. Item 24)	1
26	00-255502	Tie - Cable Locking	1
27	SC-092-36	Cap Screw 6-32 x 1/2 Hex Socket Hd	1
28	WL-008-02	Lockwasher #6 Internal Shakeproof	1
29	00-447373	Plate - Pivot (Incls. Item 34)	1
30	00-048374	Spring - Printhead Adjusting	1
31	SC-111-83	Cap Screw 6-32 x 3/4 Hex Socket Hd	1
32	WL-008-02	Lockwasher #6 Internal Shakeproof	1
33	WS-019-41	Washer (SST)	1
34	00-043365	Bushing	1
35	00-441760	Bushing - Gear Adjusting	1
36	NS-031-03	Stop Nut 6-32 Hex	1
37	00-441701	Label - Anti-Friction	1
38	00-047442	Bracket - Label Taken Mtg	1
39	00-043610	Sensor Assy. - Label Taken	1
40	00-043394	Bracket - Label Taken	1
41	WL-008-07	Lockwasher #8 Internal Shakeproof	1
42	SC-018-31	Mach. Screw 8-32 x 3/8 Phil. Pan Hd	1
43	SD-015-40	Self-Tapping Screw 8-32 x 3/8 Phil. Pan Hd., Type TT	2
44	SD-015-37	Self-Tapping Screw 6-32 x 1/4 Phil. Pan Hd., Type TT	2
61	WS-019-10	Washer (SST)	1
45	00-047438	Stop - Printhead Lower	1
46	00-442996	Heat Sink and Bushing Assy. (Incls. Item 48)	1
47	00-519504	Thermo Joint Compound (2 Oz.)	AR
48	00-043365	Bushing	2
49	RR-006-22	Retaining Ring 1/4 In. (SST)	1
50	00-032887	Tearbar	1
51	SD-015-37	Self-Tapping Screw 6-32 x 1/4 Phil. Pan Hd., Type TT	2
52	SA-021-46	Screw Assy. M3 x 0.5 x 12 mm Phil. Pan Hd	2
53	00-047437	Stop - Printhead Upper	1
54	SD-015-37	Self-Tapping Screw 6-32 x 1/4 Phil. Pan Hd., Type TT	1

PRINTER

ILLUS. PL-60896	PART NO.	NAME OF PART	AMT.
55	00-049396	Wire - Drain (Ground)	1
56	SD-015-37	Self-Tapping Screw 6-32 x 1/4 Phil. Pan Hd., Type TT	1
57	00-043333	Spring - Printhead	1
58	00-048374	Spring - Printhead Adjusting	1
59	00-913096-00001	Kit - Thermal Printer Cleaning	1
60	00-558169	Cleaner (Electronics) (12 Oz. Can)	AR
61	WS-019-10	Washer (SST)	1

NOTES

50 00-444875-00005 Cassette Assy.

PART NOT ILLUSTRATED

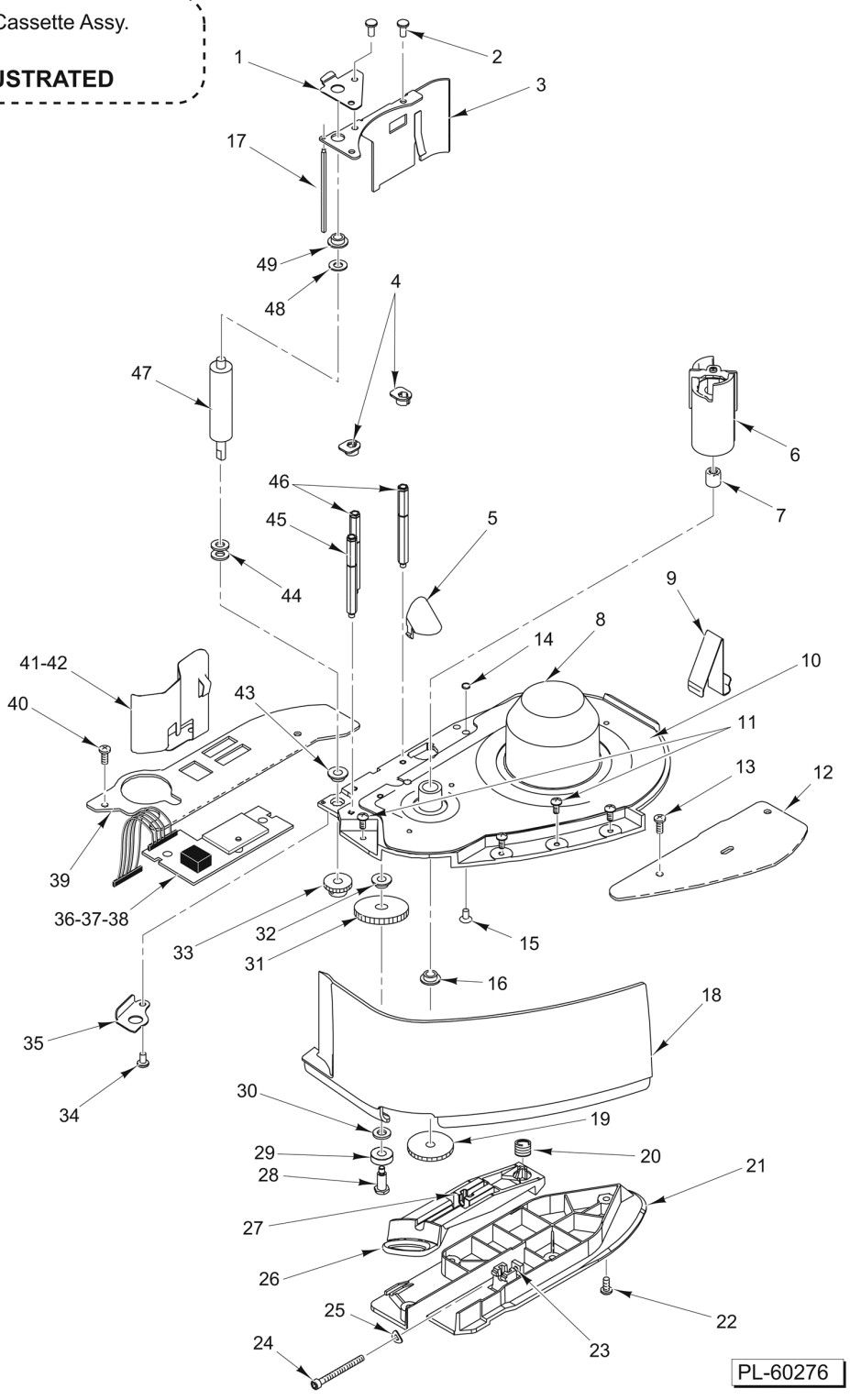

CASSETTE
(WIDE LABEL)

CASSETTE
(WIDE LABEL)

ILLUS. PL-60276	PART NO.	NAME OF PART	AMT.
1	00-047456	Plate - Cassette Locating (Upper)	1
2	00-048489	Mach. Screw 8-32 x 3/8 Phil. Pan Hd	3
3	00-047392	Retaining Plate - Roller	1
4	00-043369	Guide - Label	2
5	00-043367	Reflector	1
6	00-444660	Take-Up Assy	1
7	00-043396	Needle Bearing	1
8	00-043351	Base - Cassette	1
9	00-443735	Spring - Cassette Eject	1
10	00-440635	Label - Threading Instructions	1
11	SA-021-39	Screw Assy. 8-32 x 3/8 Phil. Pan Hd	4
12	00-043343	Rail - Guide (RH)	1
13	SD-015-40	Self-Tapping Screw 8-32 x 3/8 Phil. Pan Hd., Type TT	2
14	00-446589	Magnet - Disc	1
15	00-446917	Mach. Screw 8-32 x 1/8 Phil. Pan Hd	1
16	00-043365	Bushing	1
17	00-043357	Peel Bar	1
18	00-447051	Cover - Cassette Front	1
19	00-043362	Gear - Take-Up (Incls. Set Screw)	1
20	00-043356	Spring - Cassette Latch	1
21	00-043355	Guide - Cassette	1
22	SD-015-40	Self-Tapping Screw 8-32 x 3/8 Phil. Pan Hd., Type TT	4
23	NS-008-25	Nut 8-32 Sq. Hd	1
24	00-441172	Cap Screw 8-32 x 1-3/4 Hex Socket Hd	1
25	00-043271	Washer - Wavy	1
26	00-043353	Latch - Cassette	1
27	00-043354	Pivot Block - Adjust	1
28	00-043363	Shaft - Idler	1
29	00-131761	Ball Bearing - Double-Shielded Radial	1
30	00-043269	Washer	1
31	00-032974	Gear - Idler (Incls. Item 32)	1
32	00-043365	Bushing	1
33	00-043360	Gear - Roller (Incls. Set Screw)	1
34	SC-018-34	Mach. Screw 8-32 x 1/2 Phil. Pan Hd	1
35	00-047457	Plate - Cassette Locating (Lower)	1
36	00-446820	Kit - Media Hall Sensor	1
37	00-044631	Insulator - Media Sensor Board	1
38	SD-015-40	Self-Tapping Screw 8-32 x 3/8 Phil. Pan Hd., Type TT	2
39	00-043270	Rail - Guide (LH)	1
40	SD-015-40	Self-Tapping Screw 8-32 x 3/8 Phil. Pan Hd., Type TT	2
41	00-046479	Spring - Label Guide	1
42	SD-015-40	Self-Tapping Screw 8-32 x 3/8 Phil. Pan Hd., Type TT	1
43	00-047458	Bearing - Flange	1
44	00-043269	Washer	2
45	00-047455	Standoff	1
46	00-032914	Standoff	2
47	00-047506	Roller - Print	1
48	00-043269	Washer	1
49	00-043365	Bushing	1
50	00-444875-00005	Cassette Assy	1

53 00-447770 Cassette Assy.

PART NOT ILLUSTRATED

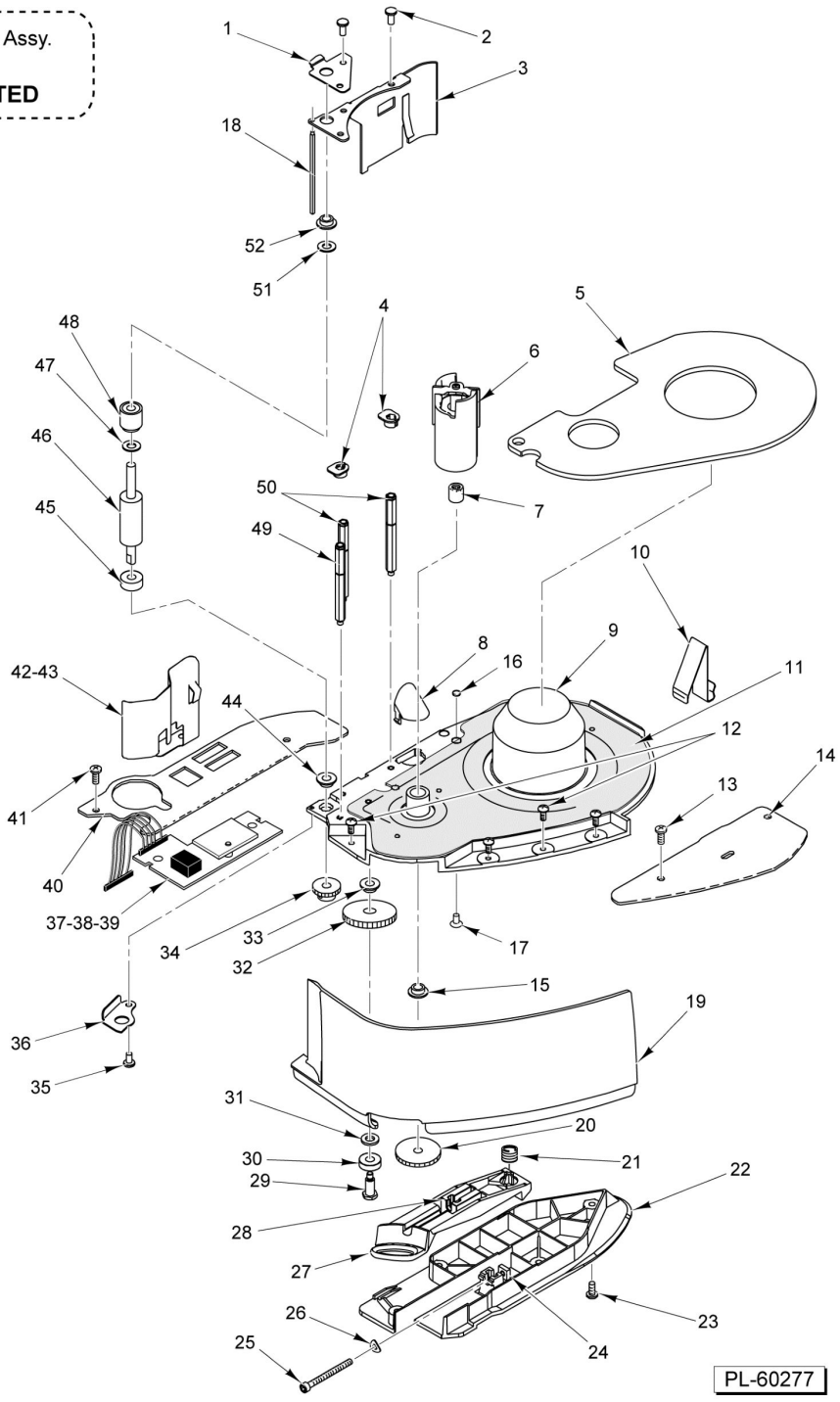

CASSETTE
(NARROW LABEL)

CASSETTE
(NARROW LABEL)

ILLUS. PL-60277	PART NO.	NAME OF PART	AMT.
1	00-047456	Plate - Cassette Locating (Upper)	1
2	00-048489	Mach. Screw 8-32 x 3/8 Phil. Pan Hd	3
3	00-047392	Retaining Plate - Roller	1
4	00-043369	Guide - Label	2
5	00-032905	Spacer - Narrow Label	1
6	00-444660	Take-Up Assy	1
7	00-043396	Needle Bearing	1
8	00-043367	Reflector	1
9	00-043351	Base - Cassette	1
10	00-443735	Spring - Cassette Eject	1
11	00-440635	Label - Threading Instructions	1
12	SA-021-39	Screw Assy. 8-32 x 3/8 Phil. Pan Hd	4
13	SD-015-40	Self-Tapping Screw 8-32 x 3/8 Phil. Pan Hd., Type TT	2
14	00-043343	Rail - Guide (RH)	1
15	00-043365	Bushing	1
16	00-446589	Magnet - Disc	1
17	00-446917	Mach. Screw 8-32 x 1/8 Phil. Pan Hd	1
18	00-043357	Peel Bar	1
19	00-447051	Cover - Cassette Front	1
20	00-043362	Gear - Take-Up (Incls. Set Screw)	1
21	00-043356	Spring - Cassette Latch	1
22	00-043355	Guide - Cassette	1
23	SD-015-40	Self-Tapping Screw 8-32 x 3/8 Phil. Pan Hd., Type TT	4
24	NS-008-25	Nut 8-32 Sq. Hd	1
25	00-441172	Cap Screw 8-32 x 1-3/4 Hex Socket Hd	1
26	00-043271	Washer - Wavy	1
27	00-043353	Latch - Cassette	1
28	00-043354	Pivot Block - Adjust	1
29	00-043363	Shaft - Idler	1
30	00-131761	Ball Bearing - Double-Shielded Radial	1
31	00-043269	Washer	1
32	00-032974	Gear - Idler (Incls. Item 33)	1
33	00-043365	Bushing	1
34	00-043360	Gear - Roller (Incls. Set Screw)	1
35	SC-018-34	Mach. Screw 8-32 x 1/2 Phil. Pan Hd	1
36	00-047457	Plate - Cassette Locating (Lower)	1
37	00-446820	Kit - Media Hall Sensor	1
38	00-044631	Insulator - Media Sensor Board	1
39	SD-015-40	Self-Tapping Screw 8-32 x 3/8 Phil. Pan Hd., Type TT	2
40	00-043270	Rail - Guide (LH)	1
41	SD-015-40	Self-Tapping Screw 8-32 x 3/8 Phil. Pan Hd., Type TT	2
42	00-046479	Spring - Label Guide	1
43	SD-015-40	Self-Tapping Screw 8-32 x 3/8 Phil. Pan Hd., Type TT	1
44	00-047458	Bearing - Flange	1
45	00-032930	Spacer - Narrow Roller Bottom	1
46	00-047505	Roller - Print	1
47	00-032915	Spacer - Narrow Roller	1
48	00-047504	Support - Roller	1
49	00-047455	Standoff	1
50	00-032914	Standoff	2
51	00-043269	Washer	1
52	00-043365	Bushing	1
53	00-447770	Cassette Assy. - Narrow Label	1

53 Cassette Assy. - Linerless
54 Cassette Assy. - Linerless (Small Hub)

PARTS NOT ILLUSTRATED

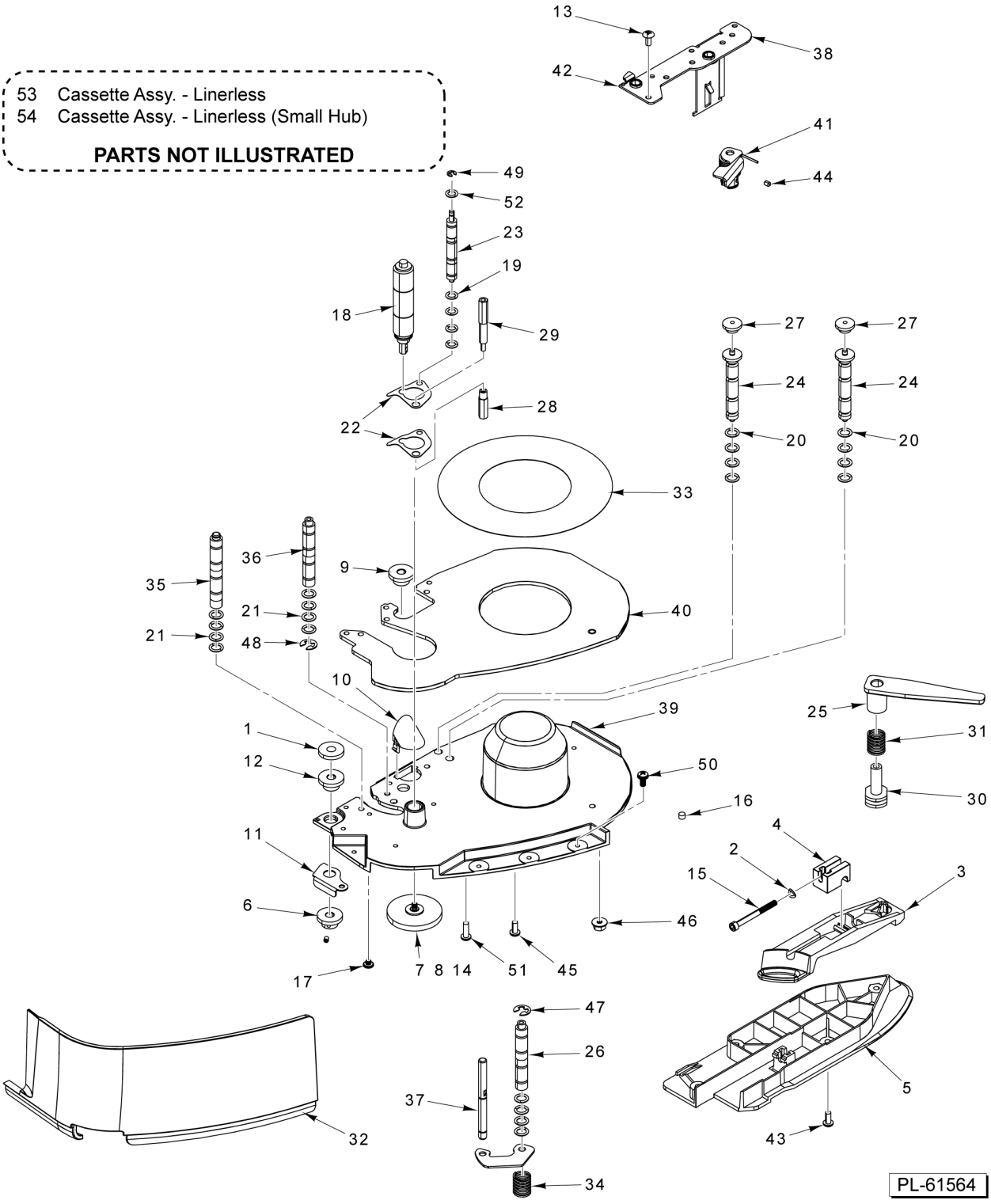

CASSETTE (LINERLESS)

CASSETTE (LINERLESS)

ILLUS. PL-61564	PART NO.	NAME OF PART	AMT.
1	00-043269	Washer	4
2	00-043271	Washer - Wavy	1
3	00-043353	Latch - Cassette	1
4	00-043354	Pivot Block - Adjust	1
5	00-043355	Guide - Cassette	1
6	00-043360	Gear - Roller (Incls. Set Screw)	1
7	00-043361	Gear - Idler	1
8	00-043363	Shaft - Idler	1
9	00-043365	Bushing	2
10	00-043367	Reflector	1
11	00-047457	Plate - Cassette Locating (Lower)	1
12	00-047458	Bearing - Flange	1
13	00-048489	Mach. Screw 8-32 x 3/8 Phil. Pan Hd	5
14	00-131761	Ball Bearing - Double-Shielded Radial	1
15	00-441172	Cap Screw 8-32 x 1-3/4 Hex Socket Hd	1
16	00-446589	Magnet - Disc	1
17	00-446917	Mach. Screw 8-32 x 1/8 Phil. Pan Hd	1
18	00-450142	Roller - Print	1
19	00-450282-00001	O-Ring	4
20	00-450282-00003	O-Ring	8
21	00-450282-00005	O-Ring	AR
22	00-450289	Guide - Label	2
23	00-450291	Roller	2
24	00-450294	Shaft	3
25	00-450295	Guide - Core	1
26	00-450296	Roller	1
27	00-450297	Roller	2
28	00-450298	Spacer - Lower	1
29	00-450299	Stand-Off	1
30	00-450302	Pivot - Retainer	1
31	00-450303	Spring - Guide	1
32	00-450304	Cover	1
33	00-450341	Liner - Label Roll	1
34	00-450430	Spring - Cassette Latch	1
35	00-450437	Spacer	3
36	00-450438	Roller	6
37	00-450453	Shaft Assy. - Tensioner	1
38	00-450466	Lever & Hub Assy	1
39	00-450469	Base - Cassette	1
40	00-450470	Plate Assy. - Label Spacer	1
41	00-450476	Spring - Tensioner	1
42	00-450497	Bracket Assy. - Roller	1
43	SD-015-40	Self-Tapping Screw 8-32 x 3/8 Phil. Pan Hd., Type TT	4
44	SC-132-21	Screw Set 6-32 x 3/16	4
45	SC-020-29	Mach. Screw 8-32 x 1/2 Phil. Flat Hd	1
46	NS-047-15	Lock Nut 8-32 Flange	1
47	RR-006-03	Retaining Ring	1
48	RR-006-22	Retaining Ring 1/4 In. (SST)	2
49	RR-011-69	Retaining Ring	6
50	SA-021-39	Screw Assy. 8-32 x 3/8 Phil. Pan Hd	4
51	SC-018-34	Mach. Screw 8-32 x 1/2 Phil. Pan Hd	3
52	45-000023	Guide - Disk	1
53	00-450500-00002	Cassette Assy. - Linerless (Incls. Items 1 thru 52)	1
54	45-000080	Cassette Assy. - Linerless (Small Hub)	1

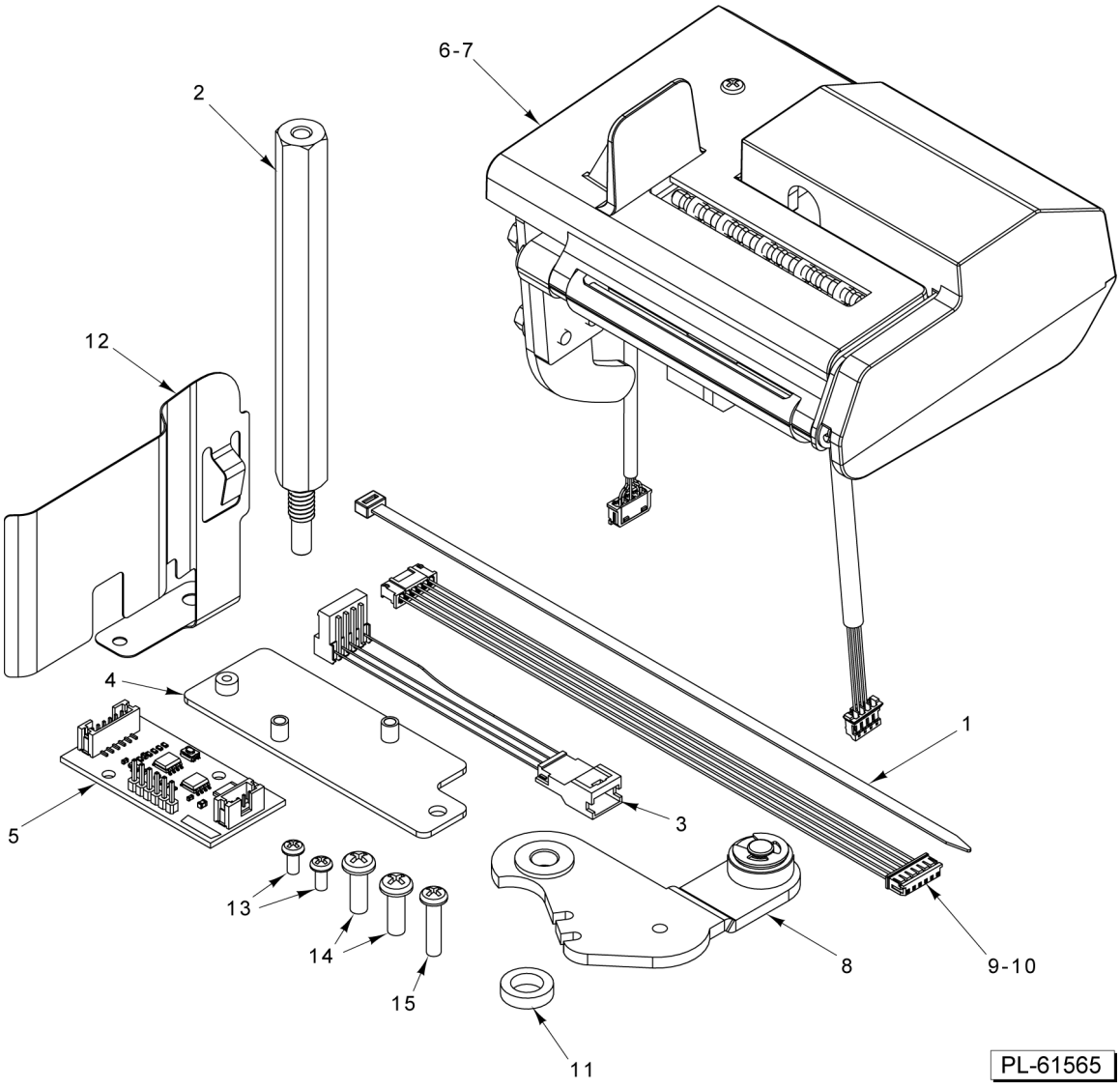

LABEL CUTTER KIT

LABEL CUTTER KIT

ILLUS. PL-61565	PART NO.	NAME OF PART	AMT.
1	00-255502	Tie - Cable Locking	1
2	00-449394	Standoff	1
3	00-450039	Cable Assy. (LTS Adapter)	1
4	00-450167	Plate Assy. - Cutter Board	1
5	00-450170	Board Assy. - Cutter (ARK)	1
	45-000301	Board Assy. - Cutter (ARA)	1
6	00-450200	Cutter Assy. (Incls. Sensor & Power Cable) (ARK)	1
7	45-000419	Cutter Assy. (Incls. Sensor & Power Cable) (ARA)	1
8	00-451230	Label Reversing Assy	1
9	00-450312	Cable Assy. (Cutter Control) (ARK)	1
10	45-000411	Cable Assy. (Cutter Control) (ARA)	1
11	00-450343	Restricting Ring	1
12	00-450463	Spring - Lable Guide	1
13	SC-018-68	Mach. Screw 4-40 x 1/4 Phil. Pan Hd	2
14	SD-015-41	Self-Tapping Screw 8-32 x 1/2 Phil. Pan Hd., Type TT	2
15	SC-113-37	Mach. Screw 6-32 x 5/8 Phil. Pan Hd	1

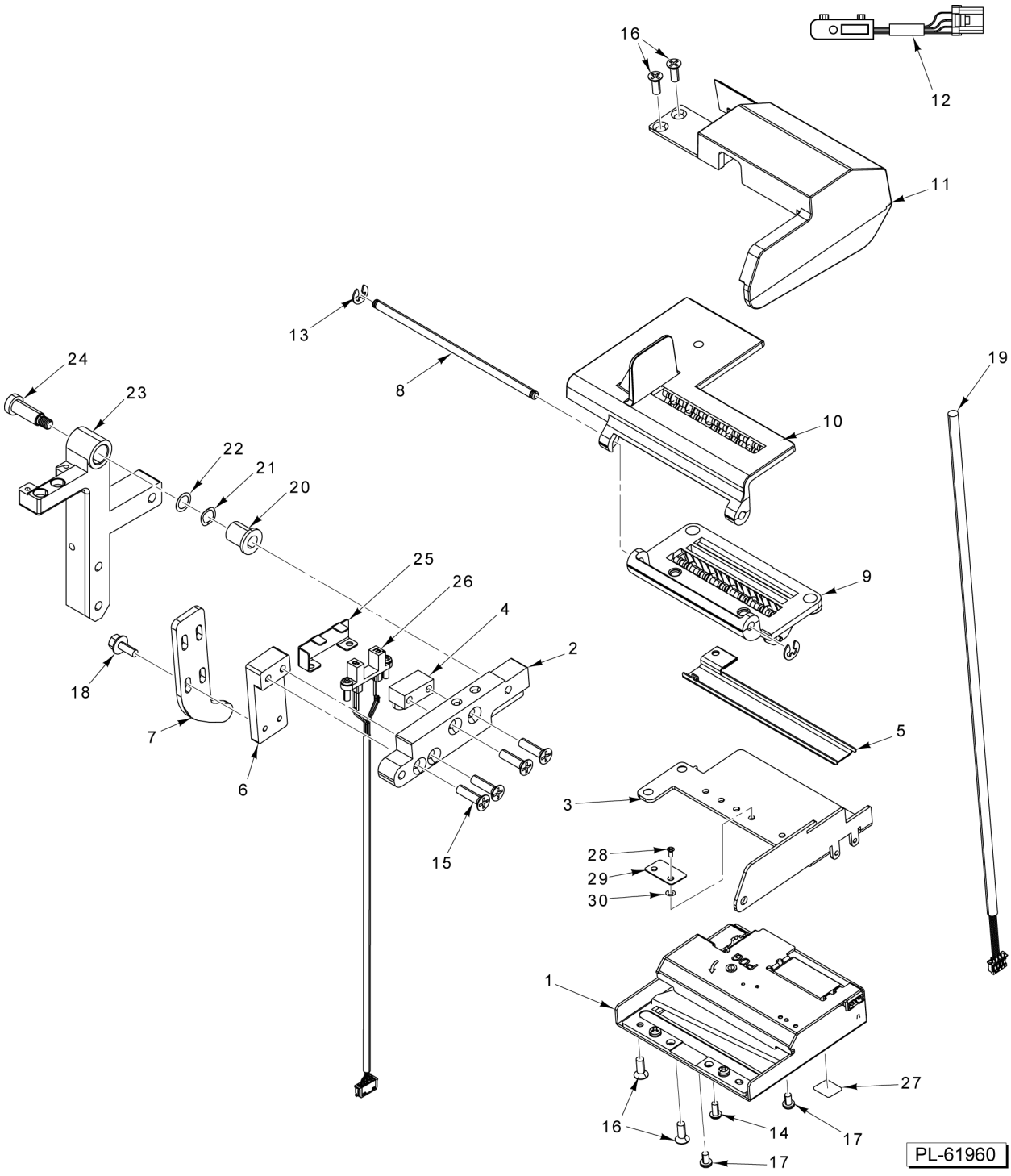

LABEL CUTTER ASSEMBLY (ARK)

LABEL CUTTER ASSEMBLY (ARK)

ILLUS. PL-61960	PART NO.	NAME OF PART	AMT.
1	00-450202	Cutter	1
2	00-450203	Block - Base Pivot	1
3	00-450204	Housing - Cutter	1
4	00-450205	Block - Stop	1
5	00-450206	Wireway	1
6	00-450207	Block - Hook Mounting	1
7	00-450208	Hook - Anti-Reverse	1
8	00-450209	Pin - Pivot	1
9	00-450231	Infeed Assy	1
10	45-000232	Outfeel Assy	1
11	00-450240	Sensor Cover Assy. (Incls. Item 12)	1
12	00-450040	Sensor Assy	1
13	RR-011-69	Retaining Ring	2
14	SC-018-68	Mach. Screw 4-40 x 1/4 Phil. Pan Hd	1
15	SC-022-10	Mach. Screw 8-32 x 5/8 Slotted Flat Hd. (SST)	4
16	SC-022-79	Mach. Screw 6-32 x 3/8 Phil. Flat Hd. (SST)	4
17	SC-124-98	Mach. Screw M3 x 0.5 x 5mm Phil. Pan Hd	2
18	SC-133-12	Mach. Screw Special 6-32 x 3/8	4
19	00-450314	Cable Assy. (Cutter)	1
20	00-450224	Bushing (Bronze)	1
21	00-450493	Washer - Wavy	1
22	00-450344	Shim - Cutter Pivot	1
23	00-450201	Block - Cutter Mount	1
24	00-450225	Screw - Shoulder	1
25	00-450237	Bracket - Interlock Shield	1
26	00-450313	Sensor Assy. - Cutter Interlock	1
27	00-450532	Label - Warning	2
28	SC-122-97	Mach. Screw 4-40 x 3/16 Phil. Pan Hd	2
29	45-000054	Plate Assy., Infeed Lock (Incls. Items 28 & 30)	1
30	45-000052	Washer - Lock	2

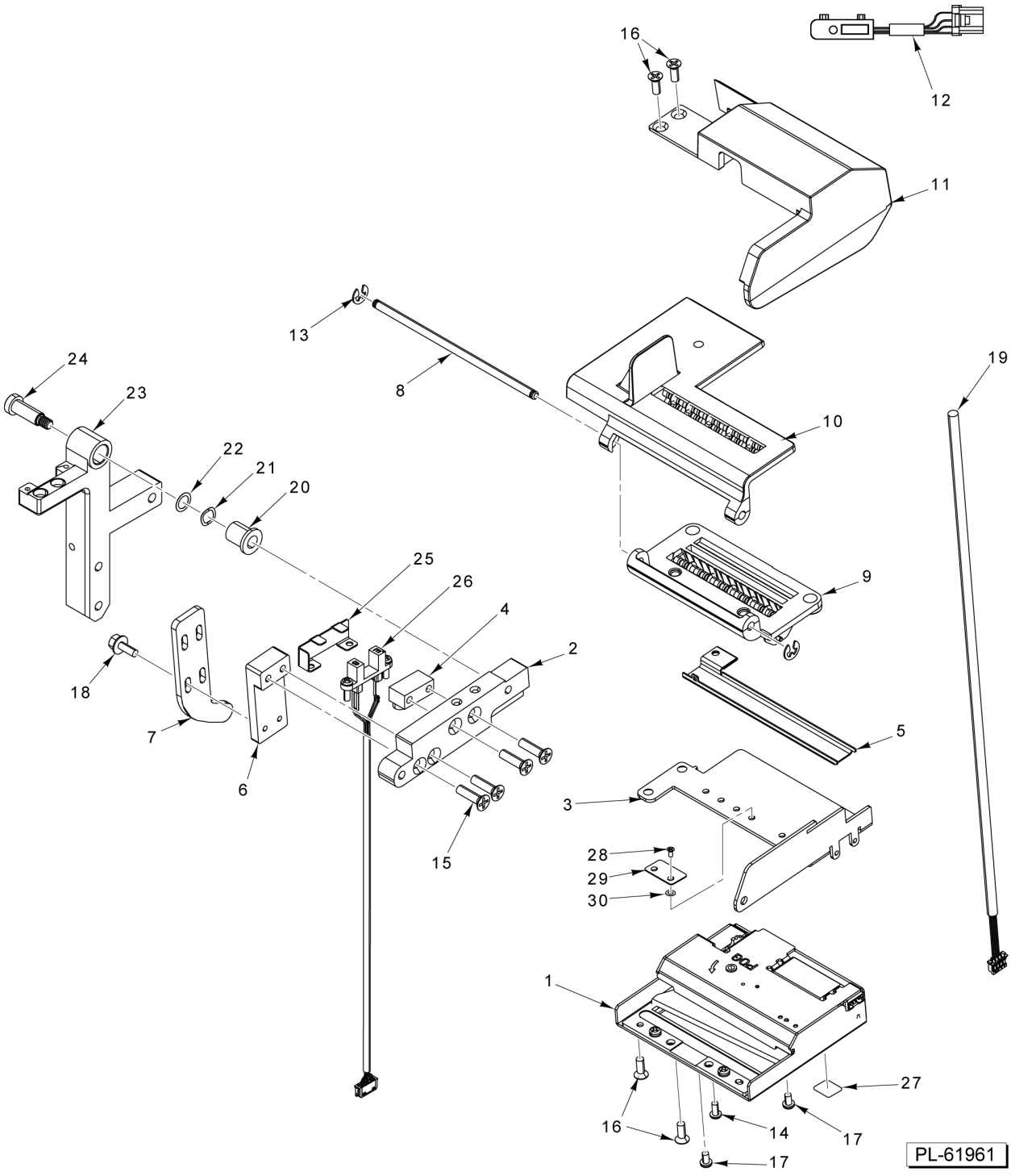

LABEL CUTTER ASSEMBLY (ARA)

LABEL CUTTER ASSEMBLY (ARA)

ILLUS. PL-61961	PART NO.	NAME OF PART	AMT.
1	00-450202	Cutter	1
2	00-450203	Block - Base Pivot	1
3	00-450204	Housing - Cutter	1
4	00-450205	Block - Stop	1
5	00-450206	Wireway	1
6	00-450207	Block - Hook Mounting	1
7	00-450208	Hook - Anti-Reverse	1
8	00-450209	Pin - Pivot	1
9	00-450231	Infeed Assy	1
10	45-000232	Outfeel Assy	1
11	00-450240	Sensor Cover Assy. (Incls. Item 12)	1
12	00-450040	Sensor Assy	1
13	RR-011-69	Retaining Ring	2
14	SC-018-68	Mach. Screw 4-40 x 1/4 Phil. Pan Hd	1
15	SC-022-10	Mach. Screw 8-32 x 5/8 Slotted Flat Hd. (SST)	4
16	SC-022-79	Mach. Screw 6-32 x 3/8 Phil. Flat Hd. (SST)	4
17	SC-124-98	Mach. Screw M3 x 0.5 x 5mm Phil. Pan Hd	2
18	SC-133-12	Mach. Screw Special 6-32 x 3/8	4
19	00-450314	Cable Assy. (Cutter)	1
20	00-450224	Bushing (Bronze)	1
21	00-450493	Washer - Wavy	1
22	00-450344	Shim - Cutter Pivot	1
23	00-450201	Block - Cutter Mount	1
24	00-450225	Screw - Shoulder	1
25	00-450237	Bracket - Interlock Shield	1
26	45-000334	Sensor Assy. - Cutter Interlock	1
27	00-450532	Label - Warning	2
28	SC-122-97	Mach. Screw 4-40 x 3/16 Phil. Pan Hd	2
29	45-000054	Plate Assy., Infeed Lock (Incls. Items 28 & 30)	1
30	45-000052	Washer - Lock	2

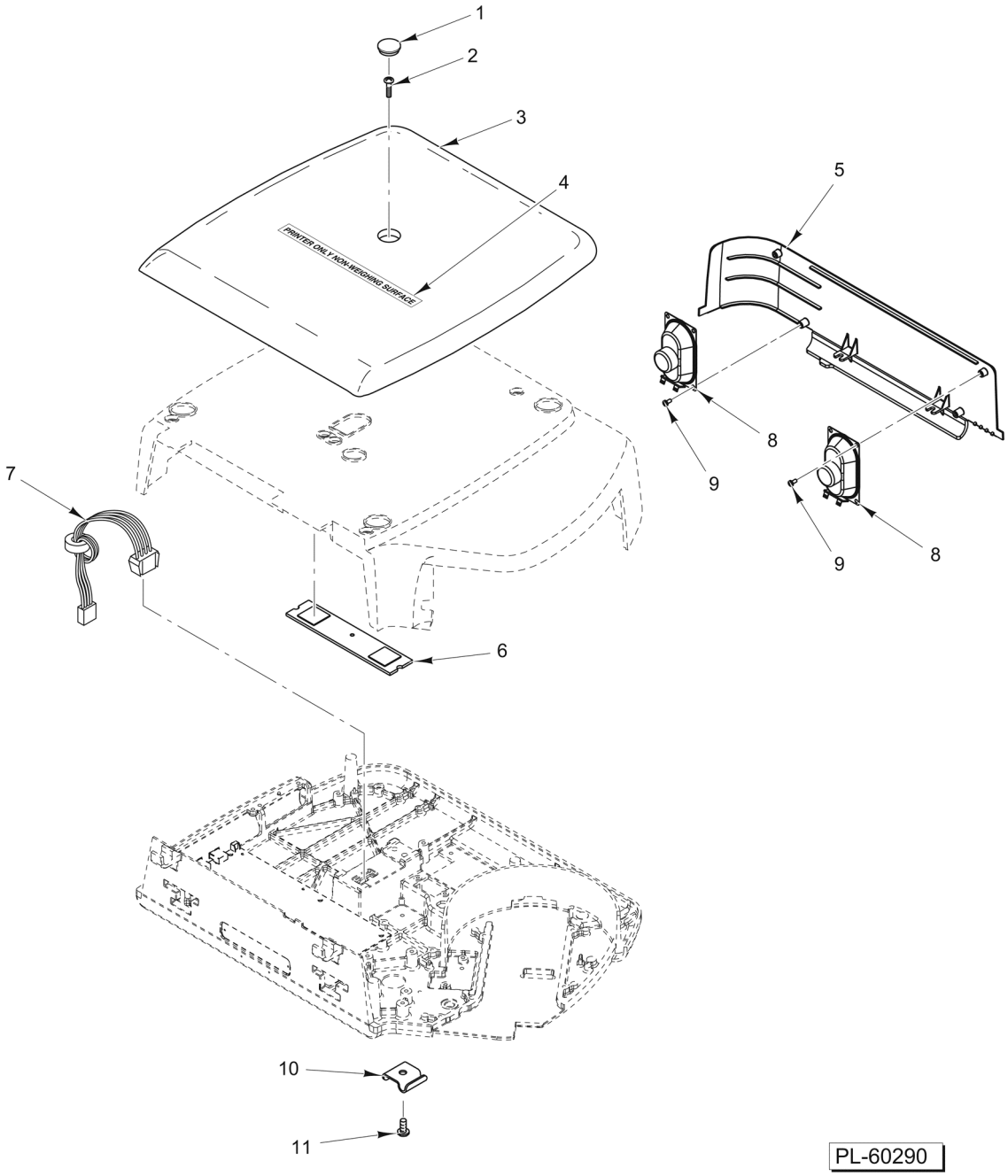

PRINTER ONLY
(ML-29352, ML-29371, & ML-29382)

PRINTER ONLY
(ML-29352, ML-29371, & ML-29382)

ILLUS. PL-60290	PART NO.	NAME OF PART	AMT.
1	00-447137	Plug - Cover	1
2	SC-018-31	Mach. Screw 8-32 x 3/8 Phil. Pan Hd	1
3	00-445262-00005	Cover - Printer Top (Black)	1
4	00-445215	Label - Printer	1
5	00-447052	Panel - Housing Filler	1
6	00-447111	Bracket Assy. - Cover	1
7	00-445270-00001	Cable Assy	1
8	00-447030	Speaker Assy	2
9	SC-018-28	Mach. Screw 6-32 x 1/4 Phil. Pan Hd	4
10	00-443053	Clamp	1
11	SD-015-41	Self-Tapping Screw 8-32 x 1/2 Phil. Pan Hd., Type TT	1

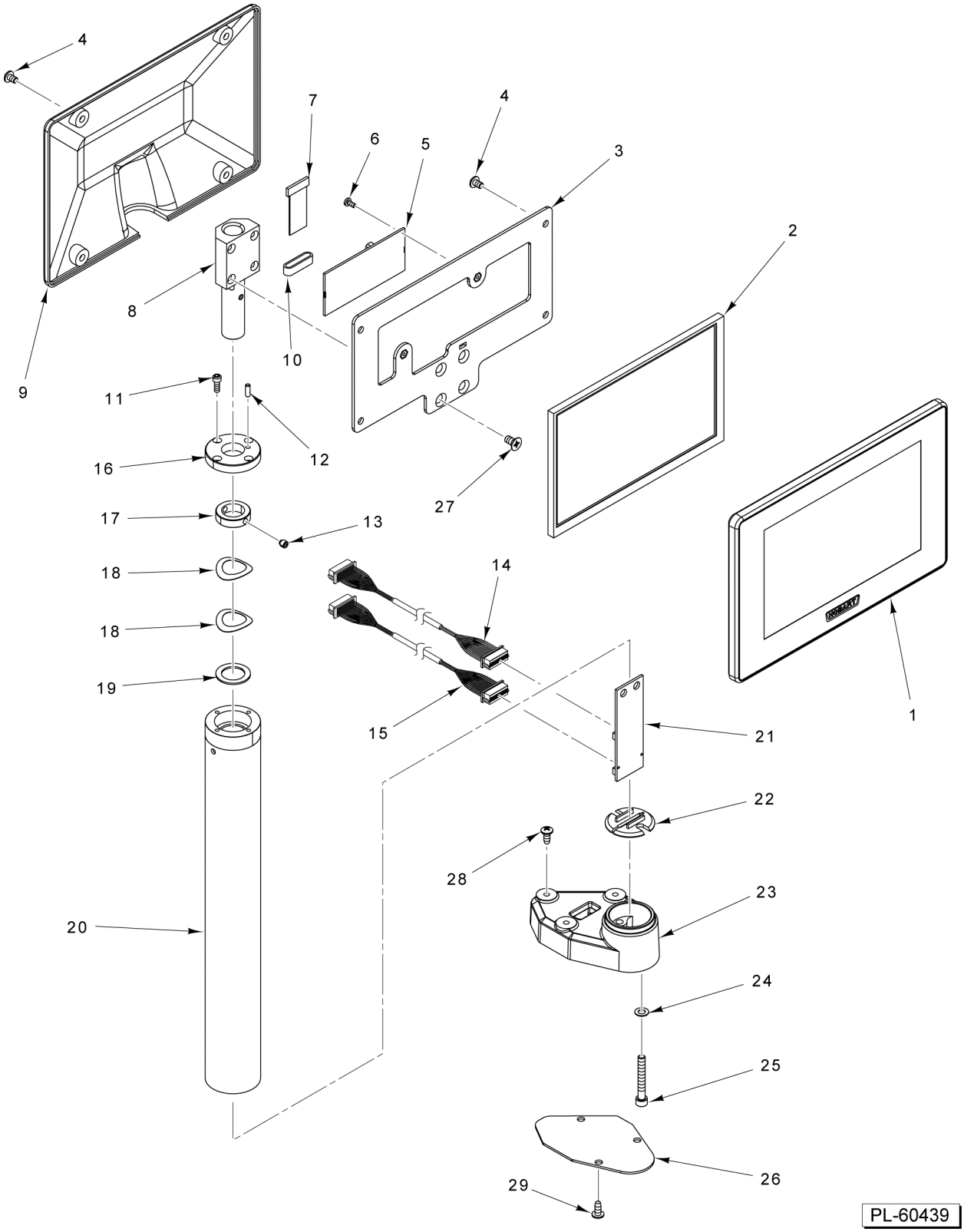

ELEVATED DISPLAY
(7 IN.)

ELEVATED DISPLAY
(7 IN.)

ILLUS. PL-60439	PART NO.	NAME OF PART	AMT.
1	00-447763	Housing Assy. (Front)	1
2	00-447762	Display (Color)	1
3	00-447122	Plate - Display Retainer	1
4	SC-018-30	Mach. Screw 8-32 x 1/4 Phil. Pan Hd	8
5	00-447162	Board Assy	1
6	SC-018-68	Mach. Screw 4-40 x 1/4 Phil. Pan Hd	2
7	00-447199	Cable Assy	1
8	00-447148	Block Assy. - Pivot	1
9	00-447126	Housing Assy. (Rear)	1
10	00-447066	Cable - Flex Ribbon (Ferrite)	1
11	SC-120-37	Cap Screw 6-32 x 3/8 Hex Socket Hd. (SST)	4
12	00-447143	Pin - Dowel	1
13	SC-088-55	Set Screw 10-32 x 3/16 Hex Hdls., Half Dog Pt	2
14	00-447032	Cable Assy. (19 In.) (Located Inside Post)	1
15	00-447192	Cable Assy. (30 In.) (Located Inside Scale)	1
16	00-447710	Cap - Display Mount	1
17	00-447712	Collar	1
18	00-447714	Washer - Spring	2
19	00-447713	Washer - Thrust	1
20	00-447140	Tube - Display Mounting	1
21	00-447190	Board Assy. (Repeater)	1
22	00-447686	Retainer (PCB)	1
23	00-447132	Base - Elevated Display	1
24	WL-008-13	Lockwasher #10 Internal Shakeproof	2
25	SC-124-37	Cap Screw 10-24 x 1-3/8 Hex Socket Hd	2
26	00-447131	Plate - Cover	1
27	SC-020-23	Mach. Screw 10-24 x 3/8 Phil. Flat Hd	4
28	SD-015-40	Self-Tapping Screw 8-32 x 3/8 Phil. Pan Hd., Type TT	3
29	SD-015-40	Self-Tapping Screw 8-32 x 3/8 Phil. Pan Hd., Type TT	3

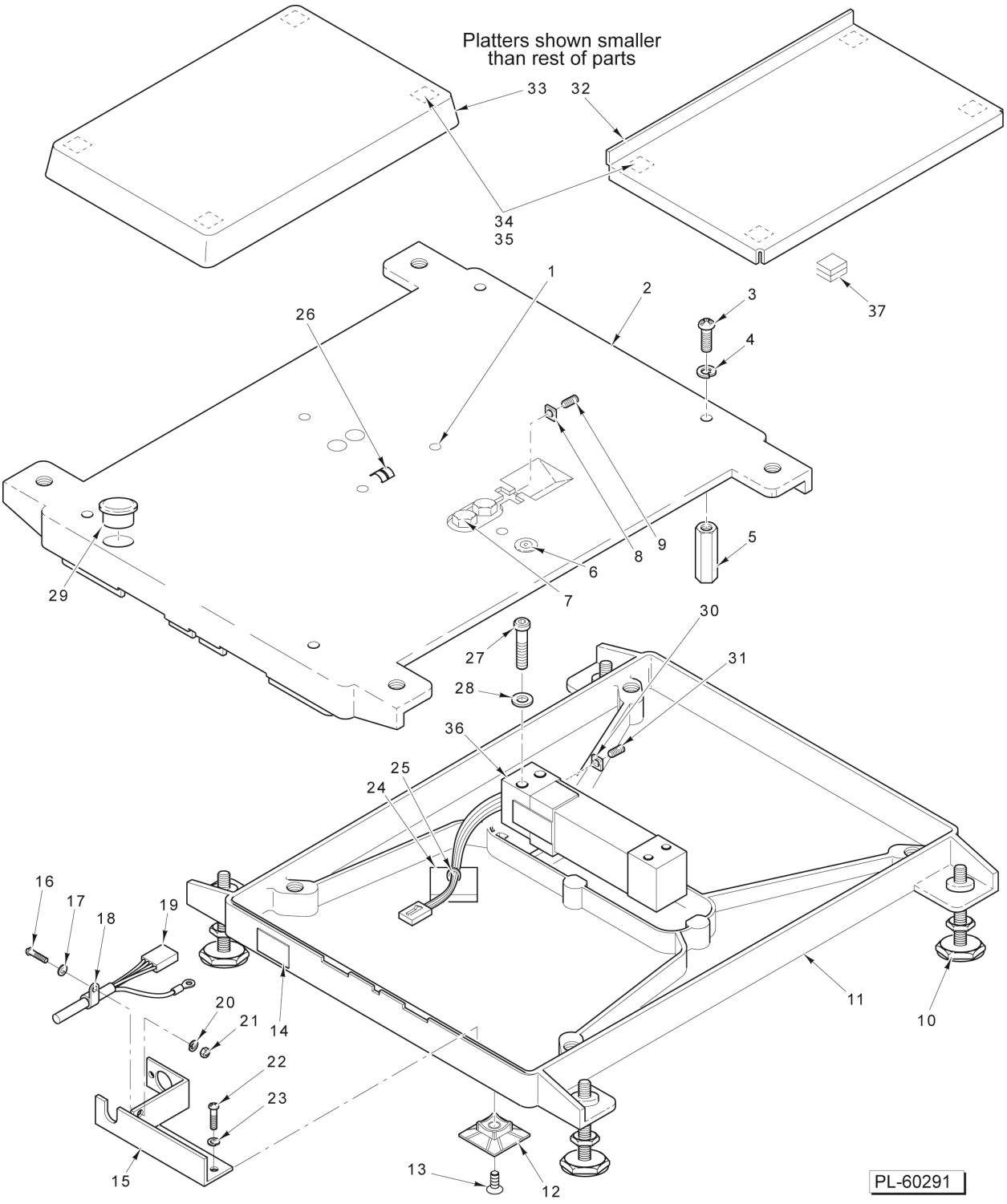

SCALE UNIT
(USED WITH TWO-PIECE SCALE/PRINTER)
(PREVIOUS CONSTRUCTION)

SCALE UNIT
(USED WITH TWO-PIECE SCALE/PRINTER)
(PREVIOUS CONSTRUCTION)

ILLUS. PL-60291	PART NO.	NAME OF PART	AMT.
1	SC-123-20	Set Screw 10-32 x 3/8 Hex Hdls., Socket Hd	2
2	00-041559	Support - Platter	1
3	SC-113-08	Mach. Screw 10-32 x 1/2 Phil. Pan Hd	4
4	WL-004-40	Lockwasher #10 Helical	4
5	00-441780	Stop - Loadcell	4
6	00-013931	Level - Spirit	1
7	SC-110-12	Cap Screw 1/4-20 x 5/8 Hex Hd	2
8	NS-046-58	Nut 10-32 Square	1
9	SC-123-20	Set Screw 10-32 x 3/8 Hex Hdls., Socket Hd	1
10	00-093160	Foot - Leveling Screw	4
11	00-042604	Base Assy	1
12	00-446051	Holder - Tie-Down	1
13	SC-022-07	Mach. Screw 8-32 x 1/4 Slotted Flat Hd. (SST)	1
14	00-184534	Label - Capacity	1
15	00-441657	Clamp - Cable	1
16	SC-018-31	Mach. Screw 8-32 x 3/8 Phil. Pan Hd	1
17	WS-019-41	Washer (SST)	1
18	00-253363	Clamp	1
19	00-183634	Cable - Scale	1
20	WL-003-12	Lockwasher #8 Helical	1
21	NS-009-12	Nut 8-32 Hex	1
22	SC-018-31	Mach. Screw 8-32 x 3/8 Phil. Pan Hd	2
23	WL-003-12	Lockwasher #8 Helical	2
24	00-255503	Mount - Cable Tie	1
25	00-251199	Tie - Cable (4 In. Long)	1
26	00-184929	Contact - Compression Spring (Qty. of 8)	AR
27	SC-120-70	Cap Screw 1/4-20 x 1-5/8 Hex Socket Hd	2
28	WL-003-39	Lockwasher 1/4 Light	2
29	00-041562	Plug - Transparent (1/2)	1
30	NS-046-58	Nut 10-32 Square	1
31	SC-123-20	Set Screw 10-32 x 3/8 Hex Hdls., Socket Hd	1
32	00-043813	Platter (Incls. Items 34 & 35)	1
33	00-043812	Platter (Incls. Items 34 & 35)	1
34	00-258959	Fastener - Dual Lock	4
35	00-258958	Fastener - Dual Lock	4
36	00-443075	Load Cell - Multiple Range (15 kg) (ML-29256)	1
37	00-259185	Pad - Platter	4

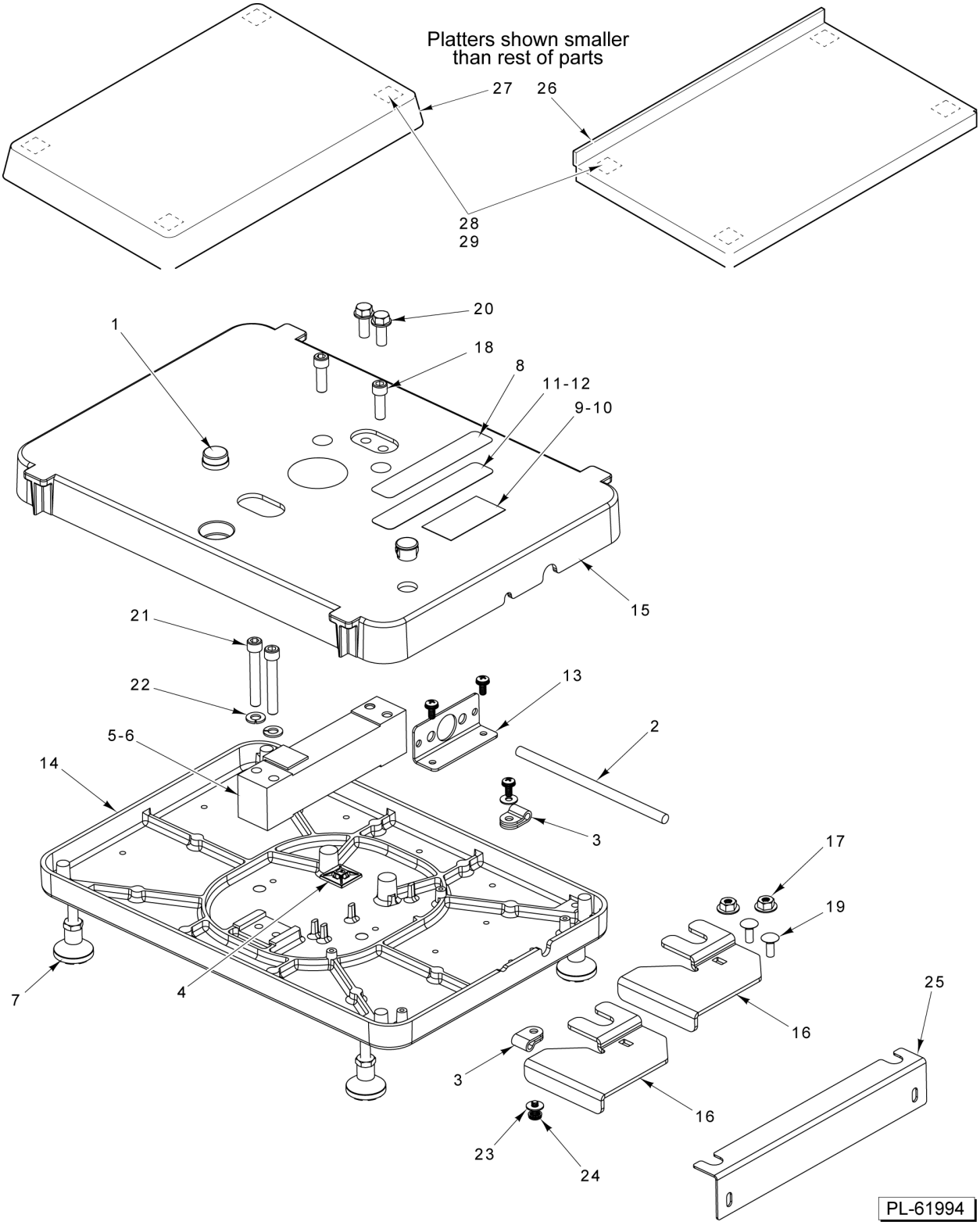

SCALE UNIT
(CURRENT CONSTRUCTION)
(STARTING S/N 451274135)

SCALE UNIT
(CURRENT CONSTRUCTION)
(STARTING S/N 451274135)

ILLUS. PL-61994	PART NO.	NAME OF PART	AMT.
1	00-043112	Level - Spirit	1
2	00-441656	Cable - Scale	1
3	00-253363	Clamp	2
4	00-255503	Mount - Cable Tie	1
5	00-443075	Load Cell - Multiple Range (15 kg)	1
6	00-443474	Load Cell Assy. (30 kg)	1
7	00-447055	Foot Assy	4
8	00-449272-00001	Overlay - Data Plate	1
9	00-449602	Label - Capacity	1
10	00-449603	Label - Capacity	1
11	00-449605-00004	Plate - Data (15 kg)	1
12	00-449605-00003	Plate - Data (25 kg)	1
13	00-450821	Bracket - Loadcell Cable	1
14	00-450823	Base - Scale	1
15	00-450824	Support - Scale Platter	1
16	00-451119	Clamp - Foot (HWS-4-ES)	2
17	NS-038-02	Lock Nut 10-24 Hex	2
18	SC-089-07	Screw Cap 1/4-20 x 1-5/8	2
19	SC-122-28	Bolt 10-24 x 1/2 Sq. Neck, Rd. Hd	2
20	SC-123-92	Mach. Screw 1/4-20 x 5/8 Hex Washer Hd	2
21	SC-120-70	Cap Screw 1/4-20 x 1-5/8 Hex Socket Hd	2
22	WL-003-39	Lockwasher 1/4 Light	2
23	WS-019-41	Washer (SST)	2
24	SA-021-41	Mach. Screw 1/4-28 x 3/4	4
25	00-451151	Bracket - Scale Mounting (HWS-4-C)	2
26	00-043813	Platter (Incls. Items 28 & 29)	1
27	00-043812	Platter (Incls. Items 28 & 29)	1
28	00-258959	Fastener - Dual Lock	4
29	00-258958	Fastener - Dual Lock	4
30	00-184929	Contact - Compression Spring (Qty. of 8)	1

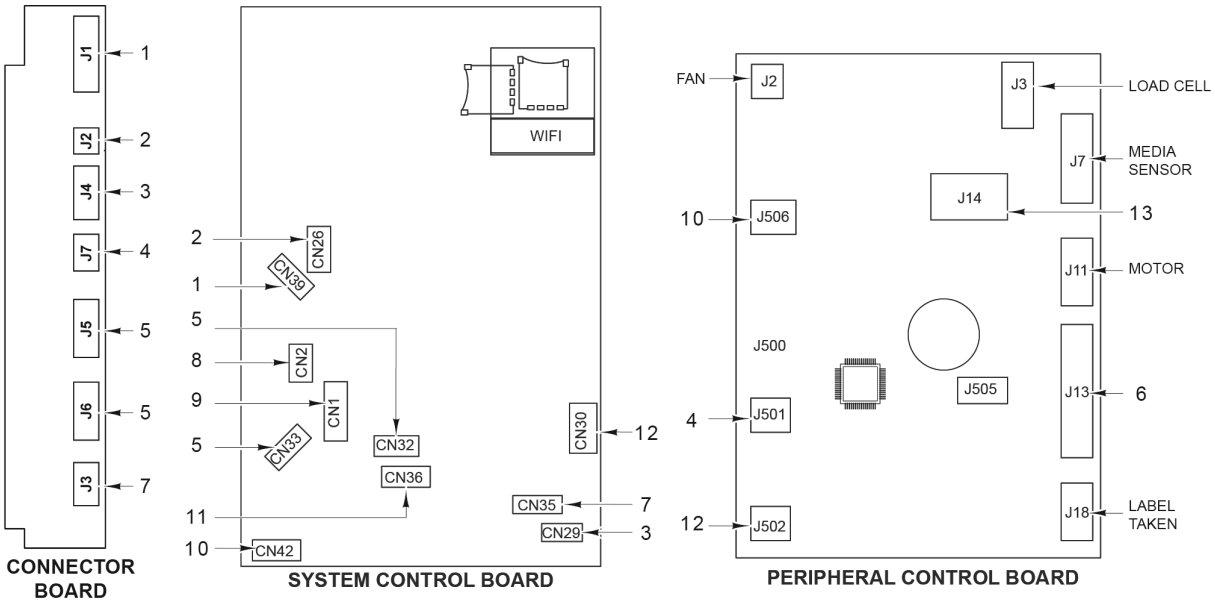

ITEM	CABLE PN	CONNECTOR BOARD CONNECTOR	SYS CNTR BOARD CONNECTOR	PERIPERAL BOARD CONNECTOR	FUNCTION (COMPONENT)
1	00-447027	J1	CN39	NA	ETHERNET - DATA (CABLE)
2	00-447028	J2	CN26	NA	ETHERNET - LED (CABLE)
3	00-447029	J4	CN29	NA	AUDIO (CABLE)
4	00-447025	J7	NA	J501	SERVICE SWITCH (CABLE)
5	00-447024	J5	CN32	NA	USB - HUB (CABLE)
		J6	CN33	NA	USB - HUB (CABLE)
6	00-444846	NA	NA	J13	PRINTHEAD DATA (CABLE)
7	00-447026	J3	CN35	NA	REBOOT / SHUTDOWN SWITCH (CABLE)
8	00-447032	NA	CN2	NA	CUSTOMER DISPLAY (CABLE)
9	00-447095	NA	CN1	NA	OPERATOR DISPLAY (CABLE)
10	00-447023	NA	CN42	J506	24 VDC POWER (CABLE)
11	00-447167	NA	CN36	NA	TOUCHSCREEN (CABLE)
12	00-447544	NA	CN30	J502	USB - HOST (CABLE)
13	00-444769	NA	NA	J14	DC POWER (CABLE)

PL-65182

CABLES - CONNECTOR BOARD (SYSTEM CONTROL / PERIPHERAL BOARD) (GREEN PCB)

CABLES - CONNECTOR BOARD
(SYSTEM CONTROL / PERIPHERAL BOARD)
(GREEN PCB)

ILLUS. PL-65182	PART NO.	NAME OF PART	AMT.
1	00-447027	Cable Assy. - Ethernet Data	1
2	00-447028	Cable Assy. - Ethernet LED	1
3	00-447029	Cable Assy. - Audio	1
4	00-447025	Cable Assy. - Service Switch	1
5	00-447024	Cable Assy. - USB Hub	2
6	00-444846	Cable Assy. - Printhead Data	1
7	00-447026	Cable Assy. - Reboot Switch	1
8	00-447032	Cable Assy. - Customer Display	1
9	00-447095	Cable Assy. - Operator Display	1
10	00-447023	Cable Assy. - 24 VDC Power	1
11	00-447167	Cable Assy. - Touchscreen	1
12	00-447544	Cable Assy. - USB (Host)	1
13	00-444769	Cable Assy. - DC Power	1

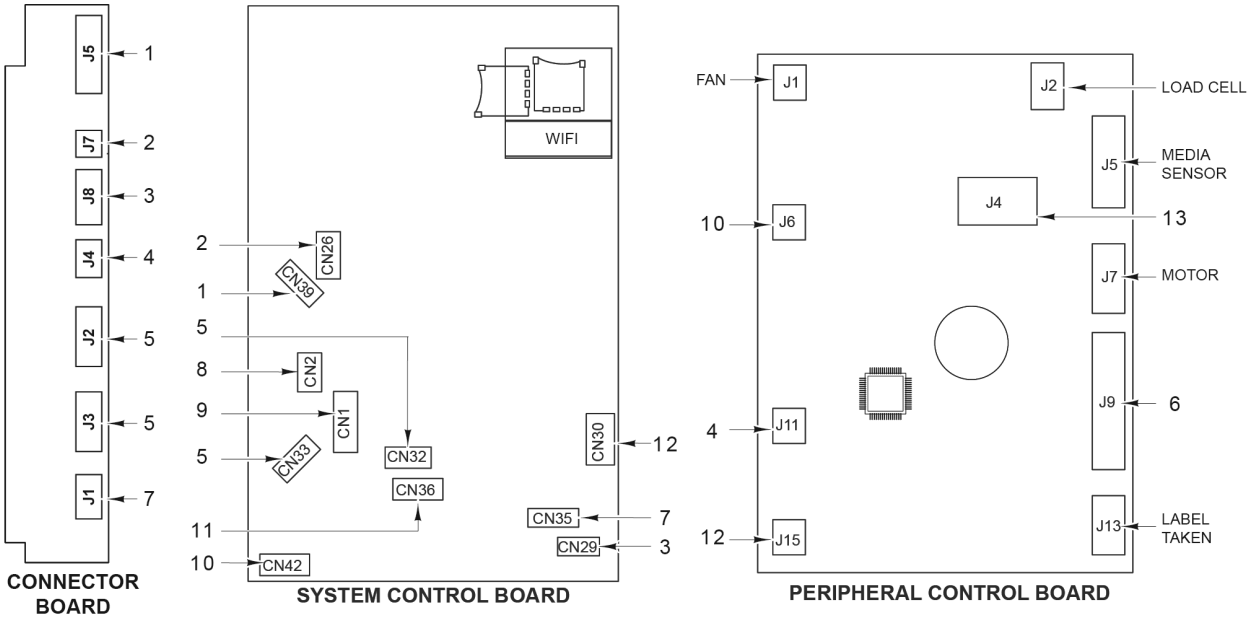

ITEM	CABLE PN	CONNECTOR BOARD CONNECTOR	SYS CNTR BOARD CONNECTOR	PERIPERAL BOARD CONNECTOR	FUNCTION (COMPONENT)
1	00-447524	J5	CN39	NA	ETHERNET - DATA (CABLE)
2	00-447028	J7	CN26	NA	ETHERNET - LED (CABLE)
3	00-447029	J8	CN29	NA	AUDIO (CABLE)
4	00-447025	J4	NA	J11	SERVICE SWITCH (CABLE)
5	00-447024	J2	CN32	NA	USB - HUB (CABLE)
		J3	CN33	NA	USB - HUB (CABLE)
6	00-444846	NA	NA	J9	PRINTHEAD DATA (CABLE)
7	00-447026	J1	CN35	NA	REBOOT / SHUTDOWN SWITCH (CABLE)
8	00-447032	NA	CN2	NA	CUSTOMER DISPLAY (CABLE)
9	00-447095	NA	CN1	NA	OPERATOR DISPLAY (CABLE)
10	00-447023	NA	CN42	J6	24 VDC POWER (CABLE)
11	00-447167	NA	CN36	NA	TOUCHSCREEN (CABLE)
12	00-447544	NA	CN30	J15	USB - HOST (CABLE)
13	00-444769	NA	NA	J4	DC POWER (CABLE)

PL-65183

CABLES - CONNECTOR BOARD (SYSTEM CONTROL / PERIPHERAL BOARD) (BLUE / BLACK PCB)

CABLES - CONNECTOR BOARD
(SYSTEM CONTROL / PERIPHERAL BOARD)
(BLUE / BLACK PCB)

ILLUS. PL-65183	PART NO.	NAME OF PART	AMT.
1	00-447524	Cable Assy. - Ethernet Data	1
2	00-447028	Cable Assy. - Ethernet LED	1
3	00-447029	Cable Assy. - Audio	1
4	00-447025	Cable Assy. - Service Switch	1
5	00-447024	Cable Assy. - USB Hub	2
6	00-444846	Cable Assy. - Printhead Data	1
7	00-447026	Cable Assy. - Reboot Switch	1
8	00-447032	Cable Assy. - Customer Display	1
9	00-447095	Cable Assy. - Operator Display	1
10	00-447023	Cable Assy. - 24 VDC Power	1
11	00-447167	Cable Assy. - Touchscreen	1
12	00-447544	Cable Assy. - USB (Host)	1
13	00-444769	Cable Assy. - DC Power	1

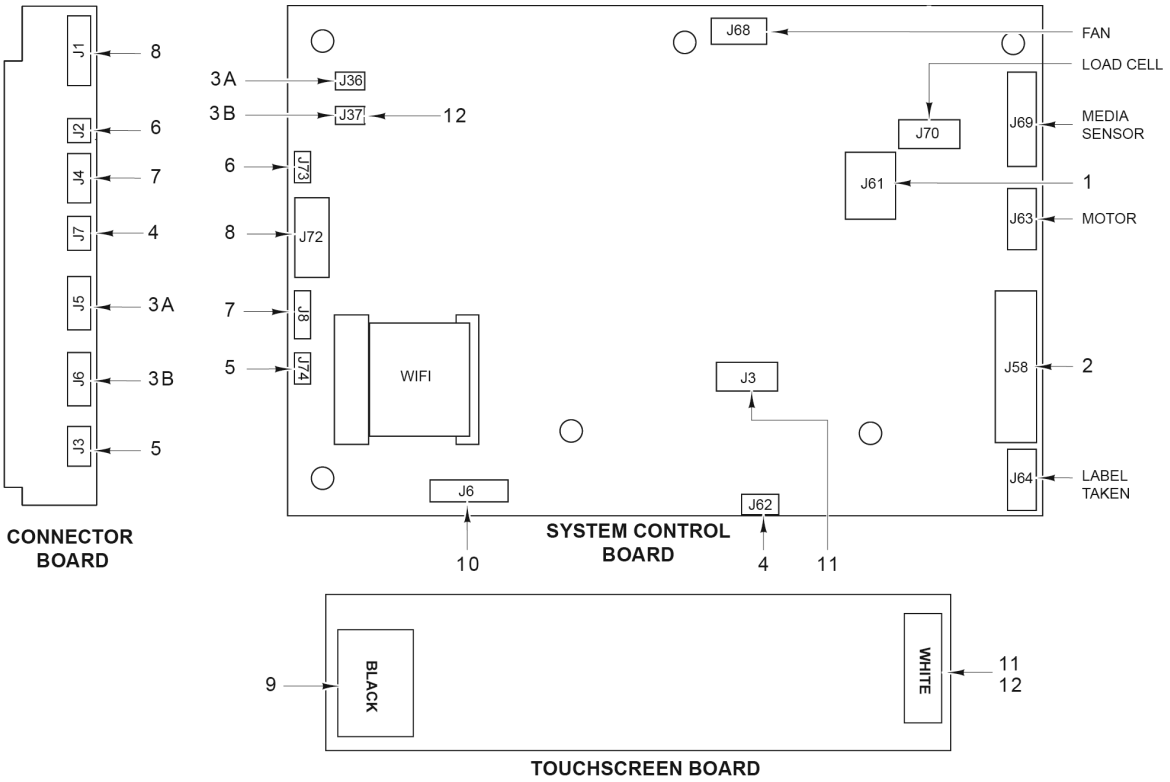

ITEM	CABLE PN	CONNECTOR BOARD CONNECTOR	SYS CNTR BOARD CONNECTOR	TOUCH SCREEN BOARD CONNECTOR	FUNCTION (COMPONENT)
1	00-444769	NA	J61	NA	DC POWER (CABLE)
2	00-444846	NA	J58	NA	PRINTHEAD DATA (CABLE)
3A	00-447024	J5	J36	NA	USB (CABLE)
3B		J6	J37	NA	USB (CABLE)
4	00-447025	J7	J62	NA	SERVICE SWITCH (CABLE)
5	00-447026	J3	J74	NA	REBOOT / SHUTDOWN SWITCH (CABLE)
6	00-447028	J2	J73	NA	ETHERNET - LED (CABLE)
7	00-447029	J4	J8	NA	AUDIO (CABLE)
8	00-447027	J1	J72	NA	ETHERNET - DATA (CABLE)
9	00-448198	NA	NA	BLACK	TOUCHSCREEN (CABLE)
10	00-448199	NA	J6	NA	OPERATOR DISPLAY (CABLE)
11	00-449483	NA	J3	WHITE	TOUCHSCREEN (CABLE) (Prior to 451198632)
12	00-449864	NA	J37	WHITE	TOUCHSCREEN (CABLE) (After 451198632)

PL-65186

CABLES - CONNECTOR BOARD (ARA SYSTEM CONTROL BOARD) (GREEN PCB)

CABLES - CONNECTOR BOARD (ARA SYSTEM CONTROL BOARD) (GREEN PCB)

ILLUS. PL-65186	PART NO.	NAME OF PART	AMT.
1	00-444769	Cable Assy. - DC Power	1
2	00-444846	Cable Assy. - Printhead Data	1
3	00-447024	Cable Assy. - USB	2
4	00-447025	Cable Assy. - Service	1
5	00-447026	Cable Assy. - Reboot / Shutdown	1
6	00-447028	Cable Assy. - Ethernet LED	1
7	00-447029	Cable Assy. - Audio	1
8	00-447027	Cable Assy. - Ethernet Data	1
9	00-448198	Cable Assy. - Touchscreen	1
10	00-448199	Cable Assy. - Operator Display	1
11	00-449483	Cable Assy. - USB Touchscreen (Prior to 451198632)	1
12	00-449864	Cable Assy. USB to Touchscreen Brd. (After 451198632 or has been updated)	1

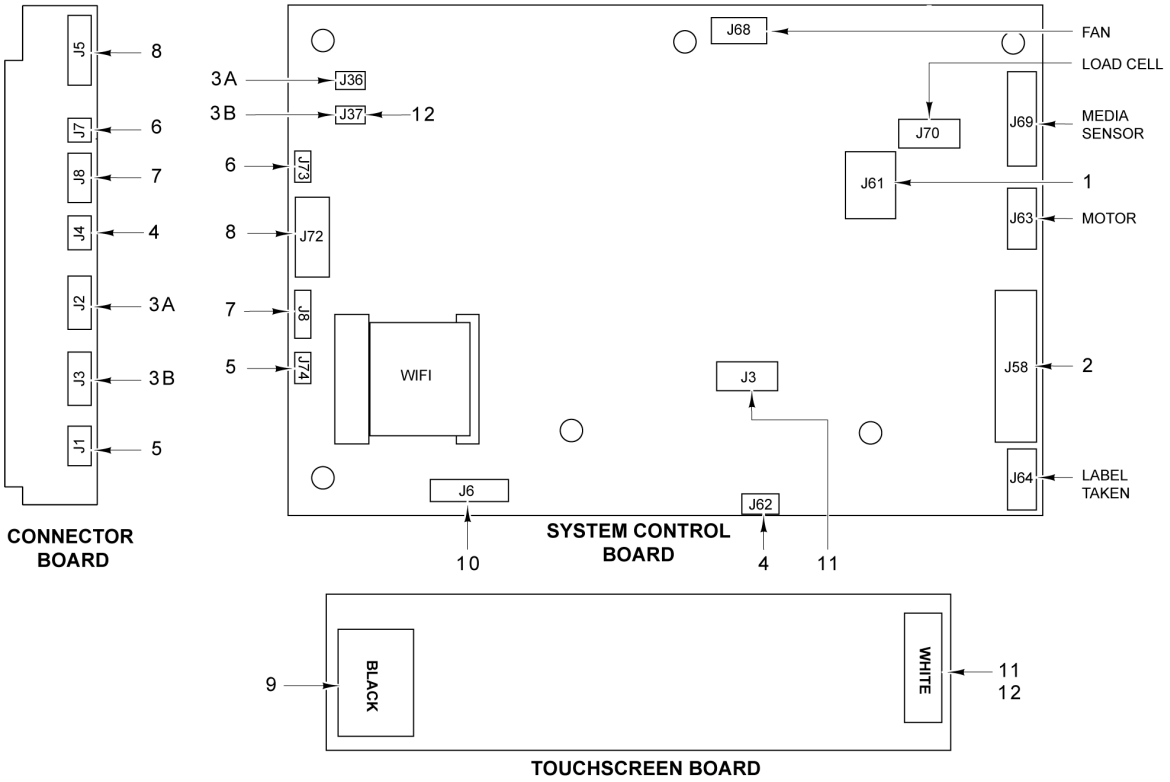

ITEM	CABLE PN	CONNECTOR BOARD CONNECTOR	SYS CNTR BOARD CONNECTOR	TOUCH SCREEN BOARD CONNECTOR	FUNCTION (COMPONENT)
1	00-444769	NA	J61	NA	DC POWER (CABLE)
2	00-444846	NA	J58	NA	PRINTHEAD DATA (CABLE)
3A	00-447024	J2	J36	NA	USB (CABLE)
3B		J3	J37	NA	USB (CABLE)
4	00-447025	J4	J62	NA	SERVICE SWITCH (CABLE)
5	00-447026	J1	J74	NA	REBOOT / SHUTDOWN SWITCH (CABLE)
6	00-447028	J7	J73	NA	ETHERNET - LED (CABLE)
7	00-447029	J8	J8	NA	AUDIO (CABLE)
8	00-447524	J5	J72	NA	ETHERNET - DATA (CABLE)
9	00-448198	NA	NA	BLACK	TOUCHSCREEN (CABLE)
10	00-448199	NA	J6	NA	OPERATOR DISPLAY (CABLE)
11	00-449483	NA	J3	WHITE	TOUCHSCREEN (CABLE)(Prior to 451198632)
12	00-449864	NA	J37	WHITE	TOUCHSCREEN (CABLE)(After 451198632)

PL-65185

CABLES - CONNECTOR BOARD (ARA SYSTEM CONTROL BOARD) (BLUE / BLACK PCB)

CABLES - CONNECTOR BOARD
(ARA SYSTEM CONTROL BOARD)
(BLUE / BLACK PCB)

ILLUS. PL-65185	PART NO.	NAME OF PART	AMT.
1	00-444769	Cable Assy. - DC Power	1
2	00-444846	Cable Assy. - Printhead Data	1
3	00-447024	Cable Assy. - USB	2
4	00-447025	Cable Assy. - Service	1
5	00-447026	Cable Assy. - Reboot / Shutdown	1
6	00-447028	Cable Assy. - Ethernet LED	1
7	00-447029	Cable Assy. - Audio	1
8	00-447524	Cable Assy. - Ethernet Data	1
9	00-448198	Cable Assy. - Touchscreen	1
10	00-448199	Cable Assy. - Operator Display	1
11	00-449483	Cable Assy. - USB Touchscreen	1
12	00-449864	Cable Assy. USB to Touchscreen Brd	1

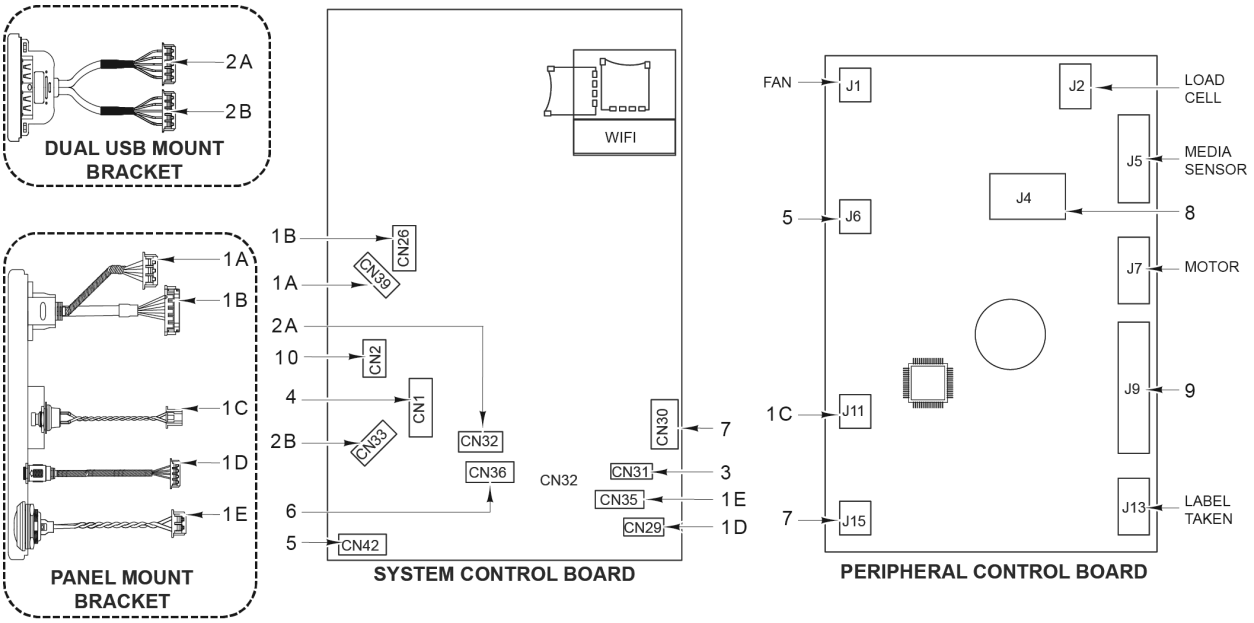

ITEM	CABLE PN	SYS CNTRL BOARD CONNECTOR	PERIPHERAL BOARD CONNECTOR	FUNCTION (COMPONENT)
1A	00-448030	CN39	NA	ETHERNET - DATA (PANEL MOUNT BRACKET CABLE)
1B		CN26	NA	ETHERNET - LED (PANEL MOUNT BRACKET CABLE)
1C		NA	J11	SERVICE SWITCH (PANEL MOUNT BRACKET CABLE)
1D		CN29	NA	AUDIO (PANEL MOUNT BRACKET)
1E		CN35	NA	REBOOT / SHUTDOWN SWITCH (PANEL MOUNT BRACKET CABLE)
2A	00-448056	CN33	NA	USB (DUAL USB MOUNTING BRACKET CABLE)
2B		CN32	NA	USB (DUAL USB MOUNTING BRACKET CABLE)
3	00-448195	CN31	NA	USB - SCANNER (CABLE)
4	00-448199	CN1	NA	OPERATOR DISPLAY (CABLE)
5	00-447023	CN42	J6	24 VDC POWER (CABLE)
6	00-448198	CN36	NA	TOUCHSCREEN (CABLE)
7	00-447544	CN30	J15	USB - HOST (CABLE)
8	00-444769	NA	J4	DC POWER (CABLE)
9	00-444846	NA	J9	PRINTEHAD DATA (CABLE)
10	00-447032	CN2	NA	CUSTOMER DISPLAY (CABLE)

PL-65184

CABLES - PANEL MOUNT (SYSTEM CONTROL / PERIPHERAL BOARD) (BLUE / BLACK PCB)

CABLES - PANEL MOUNT
(SYSTEM CONTROL / PERIPHERAL BOARD)
(BLUE / BLACK PCB)

ILLUS. PL-65184	PART NO.	NAME OF PART	AMT.
1	00-448030	Bracket Assy. (Panel Mount)	1
2	00-448056	Bracket Assy. (USB Panel Mount)	1
3	00-448195	Cable Assy. - USB (Scanner)	1
4	00-448199	Cable Assy. - Operator Display	1
5	00-447023	Cable Assy. - 24 VDC Power	1
6	00-448198	Cable Assy. - Touchscreen	1
7	00-447544	Cable Assy. - USB (Host)	1
8	00-444769	Cable Assy. - DC Power	1
9	00-444846	Cable Assy. - Printhead Data	1
10	00-447032	Cable Assy. (Customer Display)	1

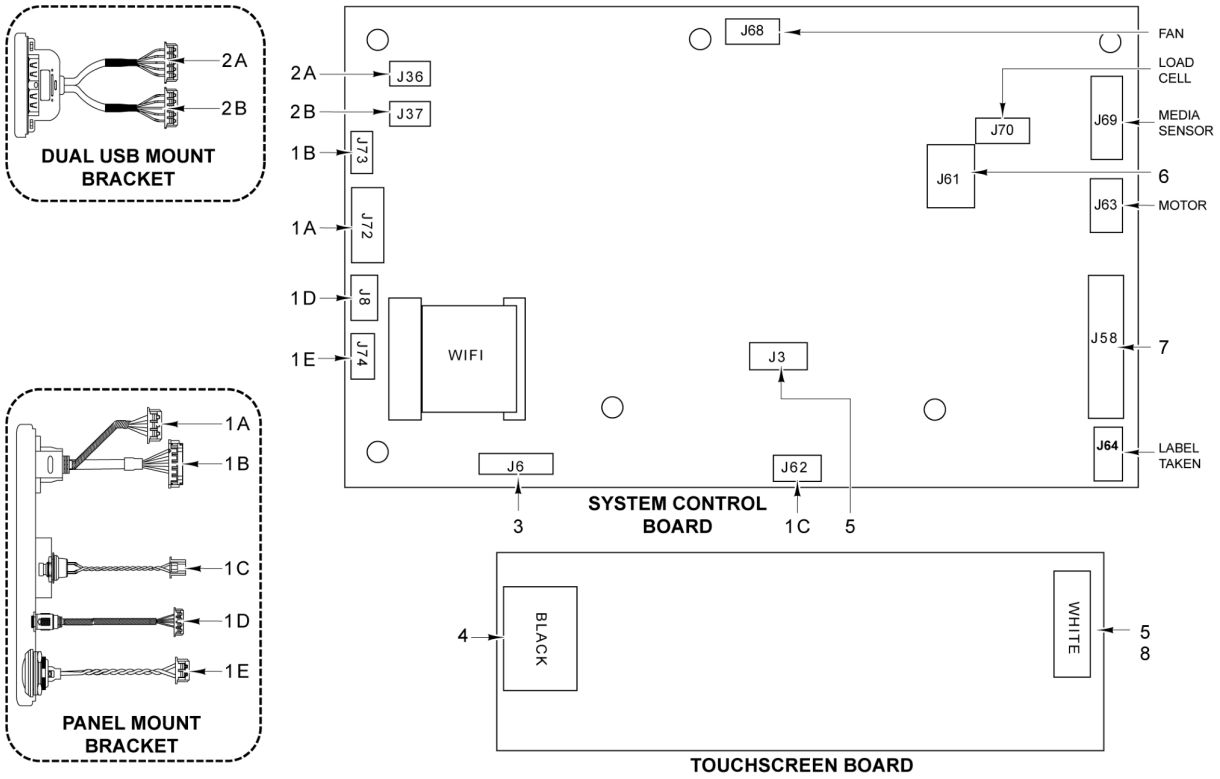

ITEM	CABLE PN	SYS CNTR BOARD CONNECTOR	TOUCH SCREEN BOARD CONNECTOR	FUNCTION (COMPONENT)
1A	00-448030	J72	NA	ETHERNET - DATA (PANEL BRACKET MOUNT CABLE)
1B		J73		ETHERNET - LED (PANEL BRACKET MOUNT CABLE)
1C		J62		SERVICE SWITCH (PANEL MOUNT BRACKET CABLE)
1D		J8		AUDIO (PANEL MOUNT BRACKET)
1E		J74		REBOOT / SHUTDOWN SWITCH (PANEL MOUNT BRACKET CABLE)
2A	00-448056	J36	NA	USB (DUAL USB MOUNTING BRACKET)
2B		J37		USB (DUAL USB MOUNTING BRACKET)
3	00-448199	J6	NA	OPERATOR DISPLAY (CABLE)
4	00-448198	NA	BLACK	TOUCHSCREEN (CABLE)
5	00-449483	J3	WHITE	TOUCHSCREEN (CABLE) (BEFORE S/N 451198632)
6	00-444769	J61	NA	DC POWER (CABLE)
7	00-444846	J58	NA	PRINTHEAD DATA (CABLE)
8	00-449864	J36	WHITE	TOUCHSCREEN (CABLE) (STARTING S/N 451198632)
9	45-000801	NA	NA	BOARD ASSY. (CUTTER)
10	45-000334	NA	NA	SENSOR ASSY. - CUTTER INTERLOCK
11	45-000411	NA	NA	CABLE ASSY. (CUTTER CONTROL)

PL-65165

CABLES - PANEL MOUNT
(ARA SYSTEM CONTROL BOARD)

CABLES - PANEL MOUNT
(ARA SYSTEM CONTROL BOARD)

ILLUS. PL-65165	PART NO.	NAME OF PART	AMT.
1	00-448030	Bracket Assy. (Panel Mount)	1
2	00-448056	Bracket Assy. (USB Panel Mount)	1
3	00-448199	Cable Assy. - Operator Display	1
4	00-448198	Cable Assy. - Touchscreen	1
5	00-449483	Cable Assy. - USB Touchscreen (Before S/N 451198632)	1
6	00-444769	Cable Assy. - DC Power	1
7	00-444846	Cable Assy. - Printhead Data	1
8	00-449864	Cable Assy. USB to Touchscreen Brd. (Starting S/N 451198632)	1
9	45-000801	Board Assy. (Cutter)	1
10	45-000334	Sensor Assy. - Cutter Interlock	1
11	45-000411	Cable Assy. (Cutter Control)	1

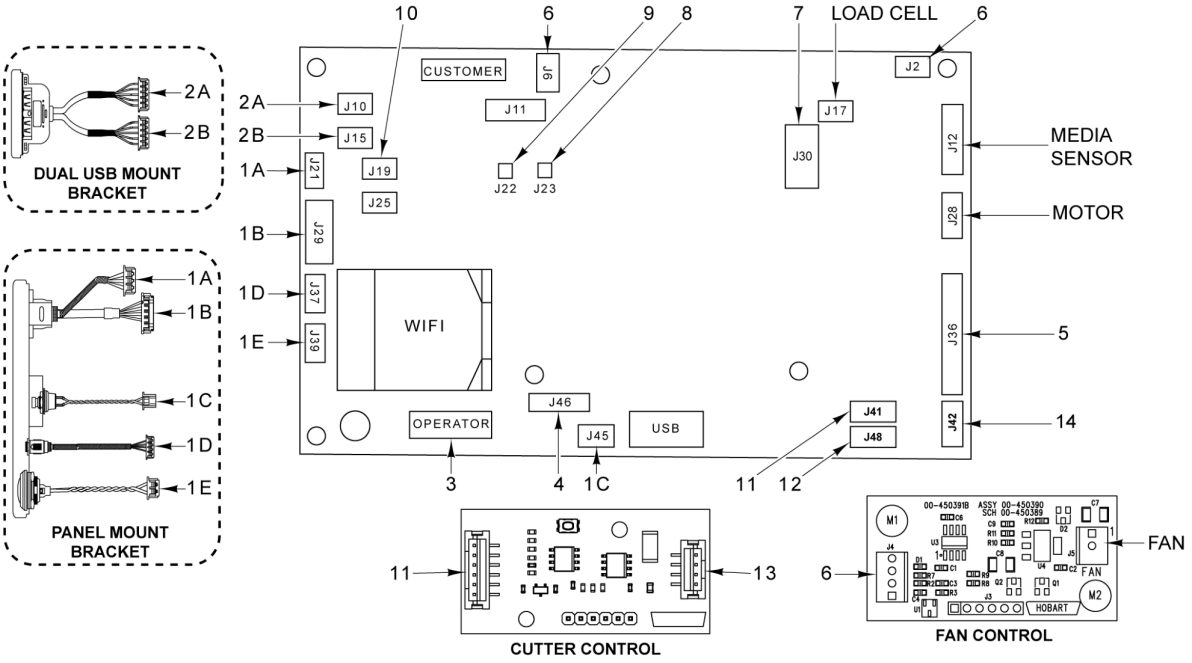

ITEM	CABLE PN	CONNECTOR	FUNCTION (COMPONENT)
1A	00-448030	J21	ETHERNET - DATA (PANEL BRACKET MOUNT CABLE)
1B		J29	ETHERNET - LED (PANEL BRACKET MOUNT CABLE)
1C		J45	SERVICE SWITCH (PANEL MOUNT BRACKET CABLE)
1D		J37	AUDIO (PANEL MOUNT BRACKET CABLE)
1E		J39	REBOOT / SHUTDOWN SWITCH (PANEL MOUNT BRACKET CABLE)
2A	00-448056	J10	USB (DUAL USB MOUNTING BRACKET)
2B		J15	USB (DUAL USB MOUNTING BRACKET)
3	00-448199	OPERATOR	OPERATOR DISPLAY (CABLE) (SS DISPLAY)
4	00-448198	J46	TOUCHSCREEN (CABLE) (SS DISPLAY)
5	00-444846	J36	PRINTHEAD DATA (CABLE)
6	00-450405	J2/J6	FAN CONTROL CABLE ASSY.
7	00-444769	J30	DC POWER (CABLE)
8	00-447030	J23	SPEAKER ASSY. (RT CHANNEL)
9	00-447030	J22	SPEAKER ASSY. (LT CHANNEL)
10	00-449884	J19	CABLE ASSY. MOLEX TO MICRO USB (ML-29448 ONLY)
11	00-450312	J41/J2 (Cut Brd.)	CUTTER CONTROL CABLE ASSEMBLY
12	00-450313	J48	CUTTER INTERLOCK
13	00-450314	J1 (Cut Brd.)	CUTTER CABLE ASSY.
14	00-450039	J42	CUTTER ASSY. (LABEL TAKEN SENSOR CABLE ADAPTER)

PL-61606

CABLES - PANEL MOUNT (ARK SYSTEM CONTROL BOARD)

CABLES - PANEL MOUNT
(ARK SYSTEM CONTROL BOARD)

ILLUS. PL-61606	PART NO.	NAME OF PART	AMT.
1	00-448030	Bracket Assy. (Panel Mount)	1
2	00-448056	Bracket Assy. (USB Panel Mount)	1
3	00-448199	Cable Assy. - LVDS (Operator Display) (SS Display)	1
4	00-448198	Cable Assy. - Touchscreen (SS Display)	1
5	00-444846	Cable Assy. - Printhead	1
6	00-450405	Cable Assy. - Fan Control	1
7	00-444769	Cable Assy. - DC Power	1
8	00-447030	Speaker Assy. (RT Channel)	1
9	00-447030	Speaker Assy. (LT Channel)	1
10	00-449884	Cable Assy. (USB Scanner) (ML-29448)	1
11	00-450312	Cable Assy. (Cutter Control)	1
12	00-450313	Sensor Assy. - Cutter Interlock	1
13	00-450314	Cable Assy. (Cutter)	1
14	00-450039	Cable Assy. (LTS Adapter)	1