CATALOG OF REPLACEMENT PARTS



HTi-SS SERIES SCALES

ML-29373	**HTi-SSLS**
ML-29374	**HTi-SSLSB**
ML-29450	**HTi-SSLSC (No Printer)**

MODELS W/ ARK BOARD/ LINERLESS

ML-29436	**HTi-SSLS5**
ML-29437	**HTi-SSLSB5**

A product of HOBART 701 S. RIDGE AVENUE TROY, OHIO 45374-0001

FORM 43319 Rev. L (December 2025)

 © HOBART 2025

Table of Contents

5 ELEVATED SELF-SERVICE DISPLAY
7 LABEL CUTTER KIT
9 WEIGHER COMPONENTS
11 MAIN CIRCUIT COMPONENTS (SYSTEM CONTROL / PERIPHERAL PCB)
13 MAIN CIRCUIT COMPONENTS (ARA PCB)
15 SYSTEM BOARD (ARK) -5 UNITS PRIOR TO SN 451273551
17 MAIN CIRCUIT COMPONENTS (ARA PCB) (-5 UNITS WITH CUTTER)
19 POWER SUPPLY
21 PRINTER
25 HTI-SSLSC (NO PRINTER)
27 CASSETTE (WIDE LABEL)
29 CASSETTE (LINERLESS)
31 LABEL CUTTER KIT (SELF SERVE)
33 LABEL CUTTER ASSEMBLY (ARK)
35 LABEL CUTTER ASSEMBLY (ARA)
37 CABLES - CONNECTOR BOARD (SYSTEM CONTROL / PERIPHERAL BOARD)
39 CABLES - PANEL MOUNT (SYSTEM CONTROL / PERIPHERAL BOARD)
41 CABLES - CONNECTOR BOARD (ARA SYSTEM CONTROL BOARD)
43 CABLES - PANEL MOUNT (ARA SYSTEM CONTROL BOARD)
45 CABLES - PANEL MOUNT (ARK SYSTEM CONTROL BOARD)

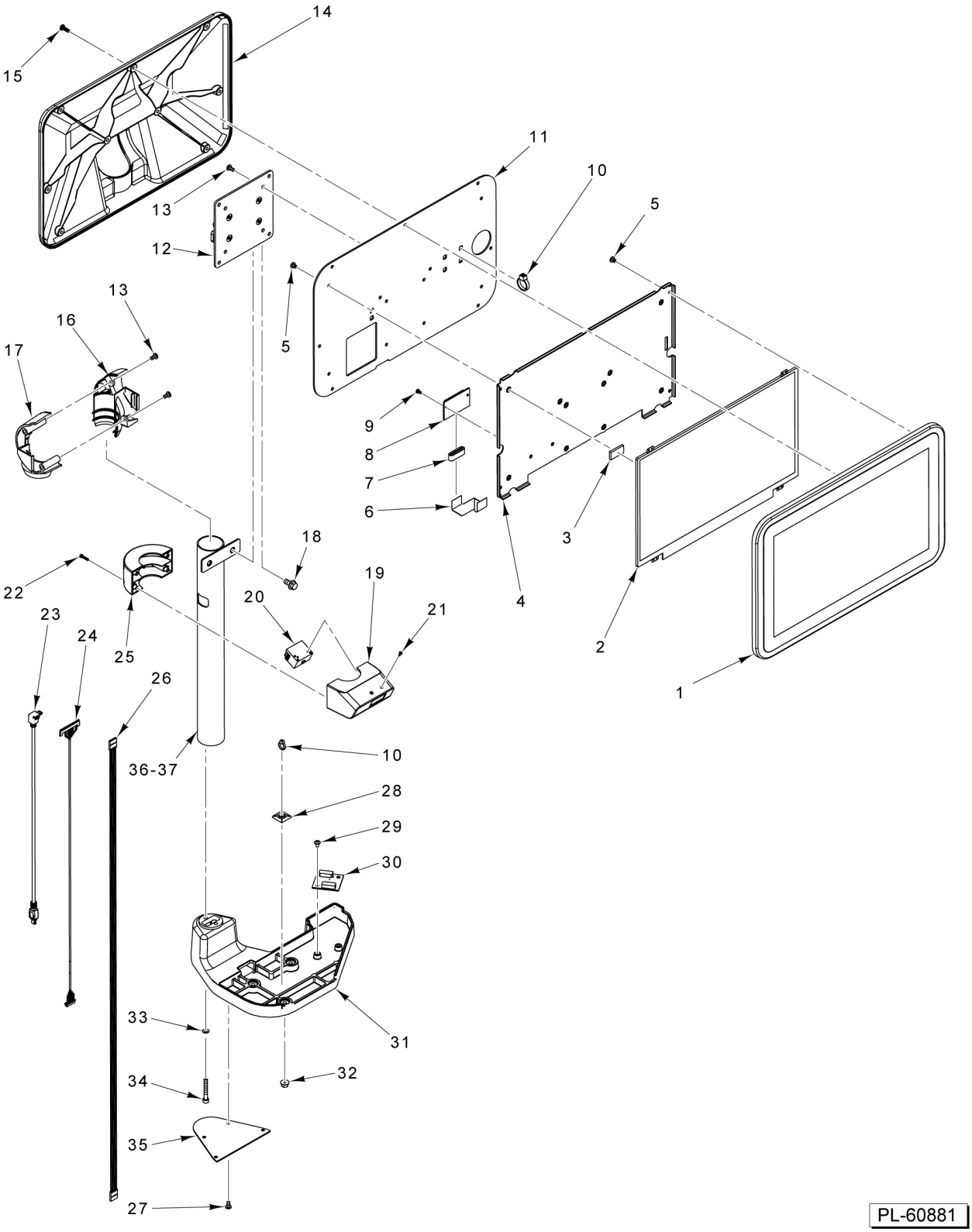

PL-60881

ELEVATED SELF-SERVICE DISPLAY

ELEVATED SELF-SERVICE DISPLAY

ILLUS. PL-60881	PART NO.	NAME OF PART	AMT.
1	00-448690	Touchscreen - Front Housing Assy	1
2	00-448231	Display - Color (14 In. 1366 x 768)	1
3	00-448342	Pad - Foam	4
4	00-448222	Plate - Display Mounting	1
5	SC-018-30	Mach. Screw 8-32 x 1/4 Phil. Pan Hd	8
6	00-448197	Cable Assy. (FFC Display)	1
7	00-447066	Cable - Flex Ribbon	1
8	00-448095	Board - LCD Interface	1
9	SC-018-68	Mach. Screw 4-40 x 1/4 Phil. Pan Hd	2
10	00-251199	Tie - Cable (4 In. Long)	4
11	00-448221	Frame - Display	1
12	00-448232	Hinge - Display	1
13	SC-018-31	Mach. Screw 8-32 x 3/8 Phil. Pan Hd	6
14	00-448224	Cover - Display Rear	1
15	SC-132-16	Mach. Screw 8-32 x 1/2	9
16	00-448225	Cover - Left Hinge	1
17	00-448226	Cover - Right Hinge	1
18	SC-129-49	Mach. Screw 1/4-20 x 1/2 Hex Washer Hd. (SST)	2
19	00-448204	Housing Assy. Front Scanner (ML-29374)	1
20	00-448234	Module - Scanner (ML-29374)	1
21	SD-039-84	Self-Tapping Screw 2-28 Phil. Pan Hd., Type TT (ML-29374)	2
22	SC-132-15	Mach. Screw 4-40 x 1/4 (ML-29374)	4
23	00-448196	Cable Assy. (USB Scanner) (ML-29374)	1
24	00-448194	Cable Assy. (LVDS Display) to Interface - Board (item 30)	1
	00-448199	Cable Assy. - LVDS (Operator Display) from Interface - Board (item 30) to System Control Board	1
25	00-448229	Housing - Rear Scanner (ML-29374)	1
26	00-448198	Cable Assy. - Touchscreen	1
27	SD-015-40	Self-Tapping Screw 8-32 x 3/8 Phil. Pan Hd., Type TT	4
28	00-255503	Mount - Cable Tie	1
29	SD-015-39	Self-Tapping Screw 8-32 x 1/4 Phil. Pan Hd., Type TT	2
30	00-448170	Interface - Board (Elevated Display)	1
31	00-448217	Base - Display	1
32	NS-047-15	Lock Nut 8-32 Flange	3
33	WL-008-13	Lockwasher #10 Internal Shakeproof	2
34	SC-124-37	Cap Screw 10-24 x 1-3/8 Hex Socket Hd	2
35	00-448218	Cover - Bottom Casting	1
36	00-448207	Post (ML-29374)	1
37	00-448208	Post - Without Holes	1
38	SD-033-87	Screw 8-32 x 3/4 Pan (Secures Display Base)	3

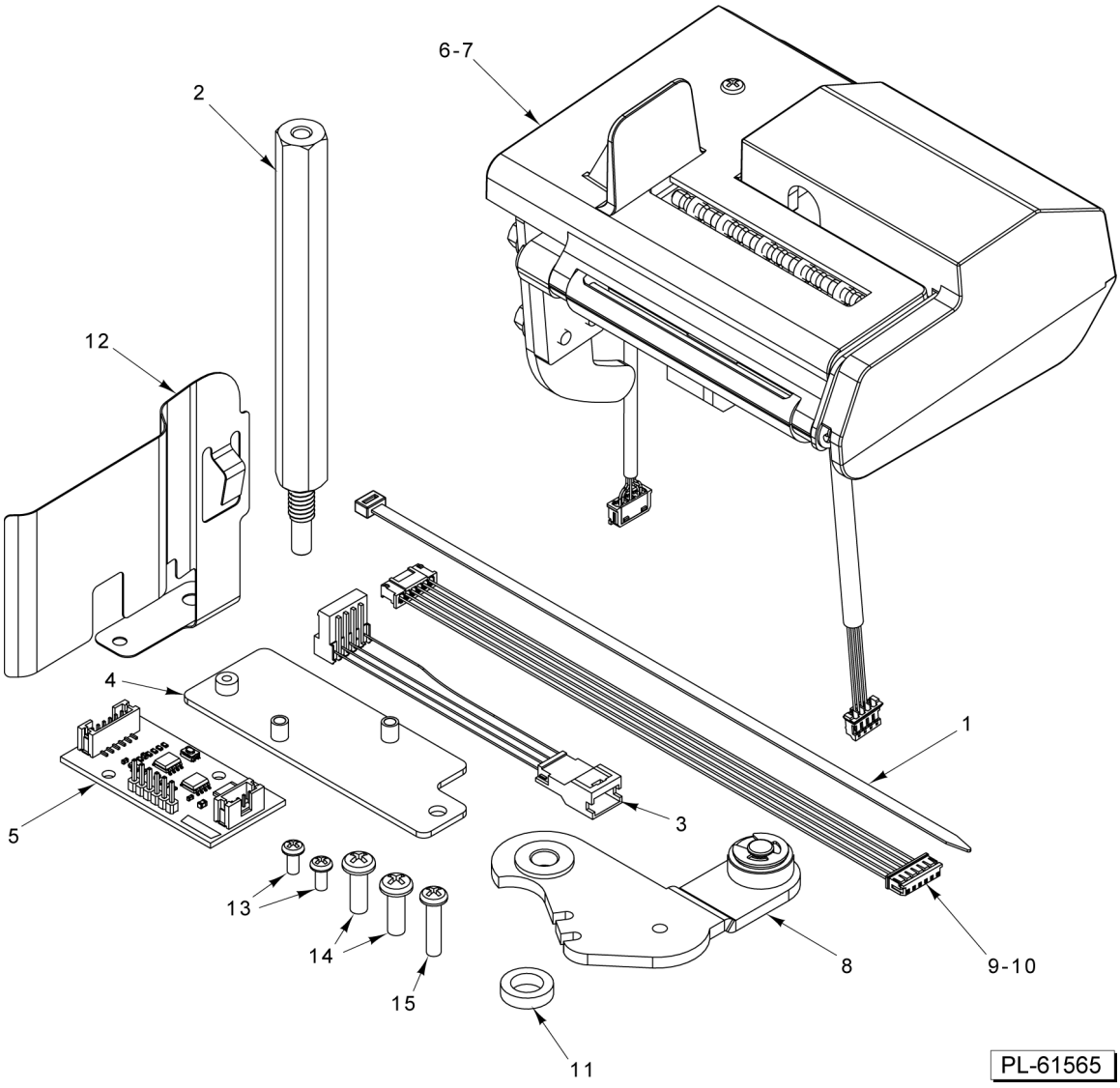

LABEL CUTTER KIT

LABEL CUTTER KIT

ILLUS. PL-61565	PART NO.	NAME OF PART	AMT.
1	00-255502	Tie - Cable Locking	1
2	00-449394	Standoff	1
3	00-450039	Cable Assy. (LTS Adapter)	1
4	00-450167	Plate Assy. - Cutter Board	1
5	00-450170	Board Assy. - Cutter	1
6	00-450200	Cutter Assy	1
7	00-451230	Label Reversing Assy	1
8	00-450312	Cable Assy. (Cutter Control)	1
9	00-450343	Restricting Ring	1
10	00-450463	Spring - Lable Guide	1
11	SC-018-68	Mach. Screw 4-40 x 1/4 Phil. Pan Hd	2
12	SD-015-41	Self-Tapping Screw 8-32 x 1/2 Phil. Pan Hd., Type TT	2
13	SC-113-37	Mach. Screw 6-32 x 5/8 Phil. Pan Hd	1

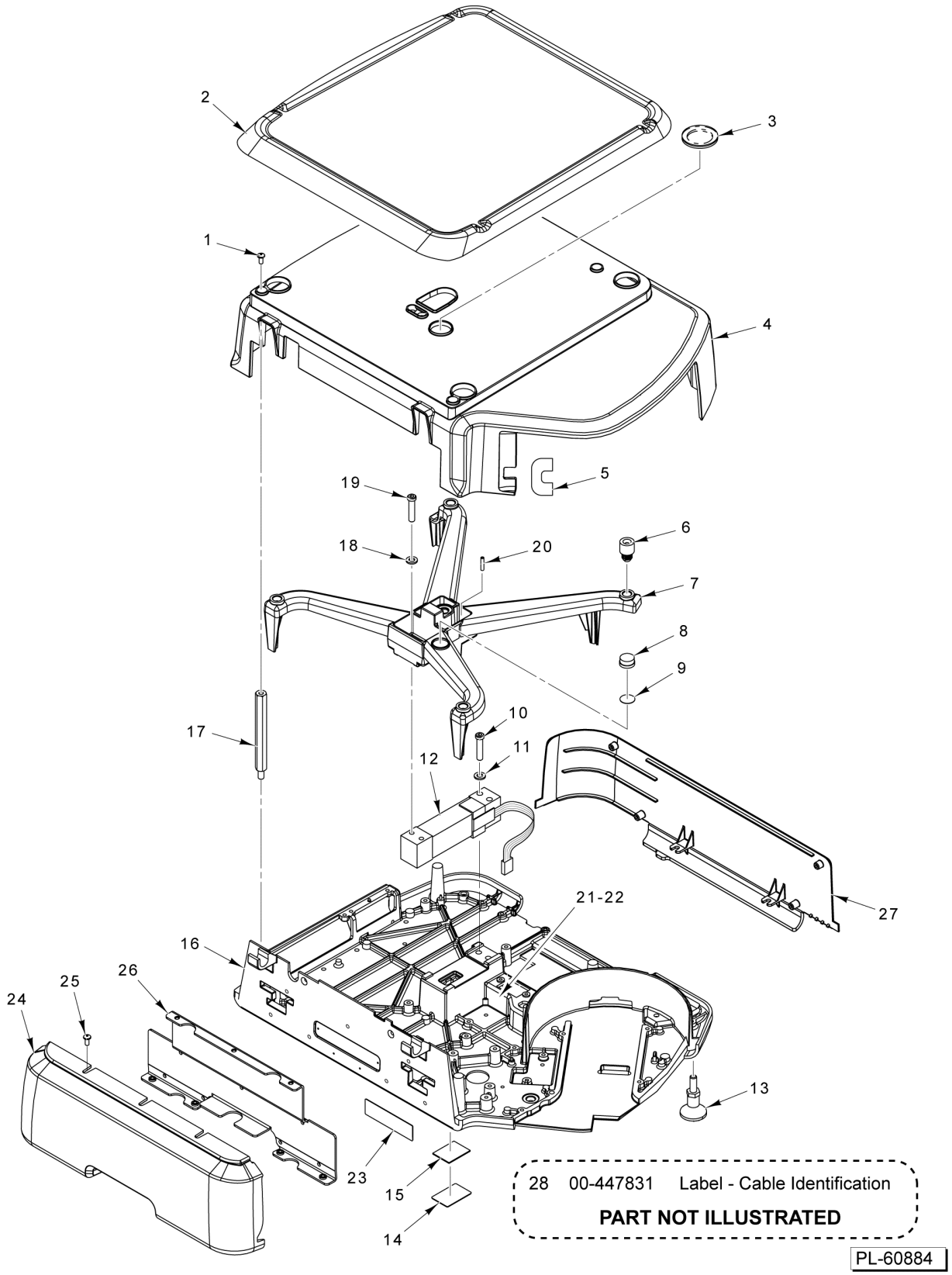

WEIGHER COMPONENTS

WEIGHER COMPONENTS

ILLUS. PL-60884	PART NO.	NAME OF PART	AMT.
1	SC-129-33	Mach. Screw 8-32 x 3/8 Phil. Pan Hd	4
2	00-447083	Platter Assy	1
3	00-441243	Cover - Level Bubble (Incls. Foam Gasket)	1
4	00-447050	Housing - Main (Black)	1
5	00-447058	Shield - Infrared	1
6	00-043319	Mount - Platter	5
7	00-043302	Platter - Sub	1
8	00-043112	Level - Spirit	1
9	00-043257	Tape - Level	1
10	SC-120-70	Cap Screw 1/4-20 x 1-5/8 Hex Socket Hd	2
11	WL-008-17	Lockwasher 1/4 Internal	2
12	00-443075	Load Cell - Multiple Range (15 kg)	1
13	00-447055	Foot Assy	4
14	00-043389	Plate - Remote Weigher	1
15	00-043256	Tape	1
16	00-444750-00006	Base - Main	1
17	00-043318	Standoff (Housing Mount)	4
18	WL-008-17	Lockwasher 1/4 Internal	2
19	SC-120-70	Cap Screw 1/4-20 x 1-5/8 Hex Socket Hd	2
20	00-043286	Screw - Overload (Stop)	2
21	00-043256	Tape	1
22	00-043390	Plate - SM Port	1
23	00-184336	Label - Interference Warning	1
24	00-448216	Cover - Front	1
25	SC-018-34	Mach. Screw 8-32 x 1/2 Phil. Pan Hd	7
26	00-448215	Bracket - Front Cover	1
27	00-447052	Panel - Housing Filler	1
28	00-447831	Label - Cable Identification	1

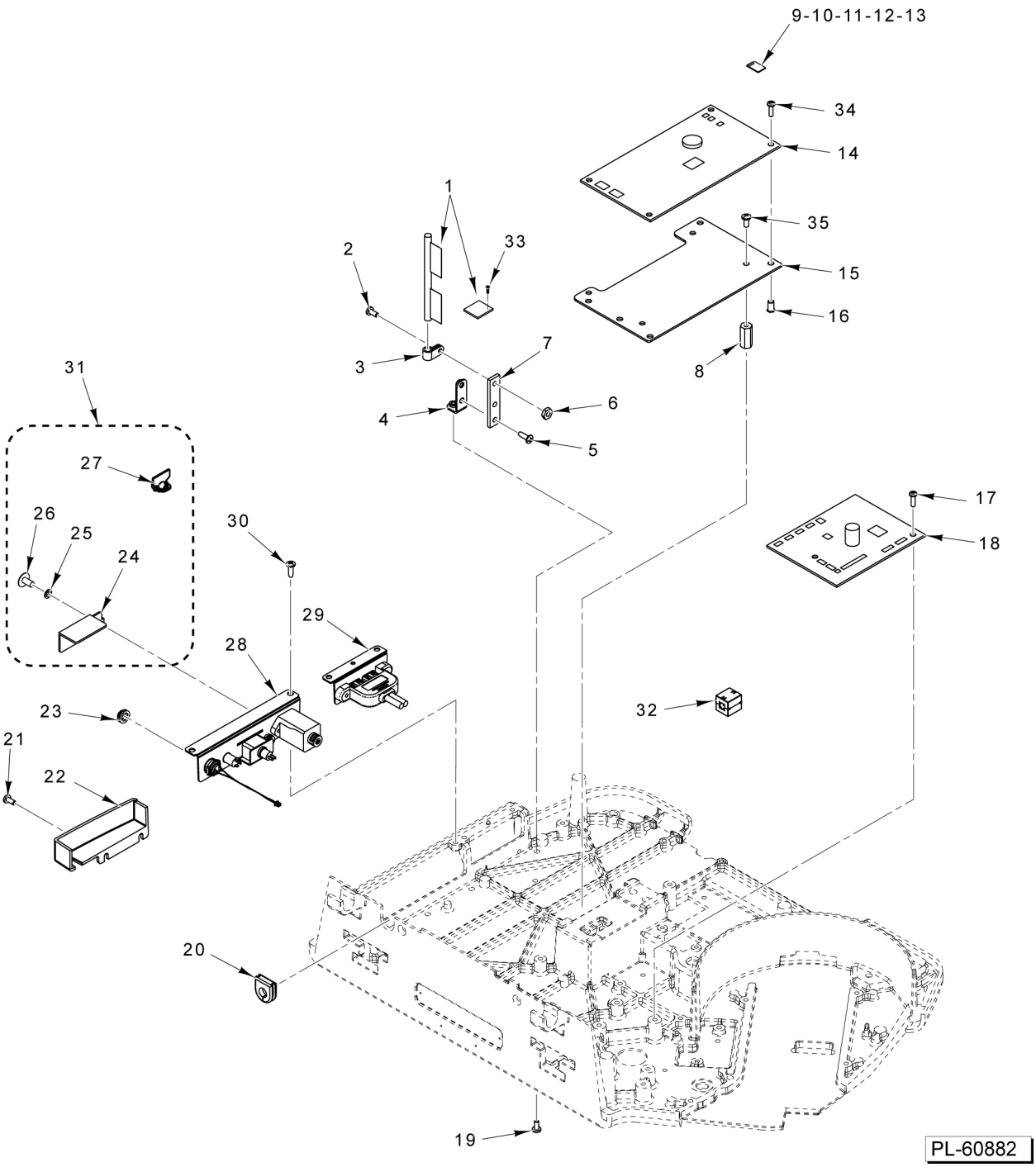

MAIN CIRCUIT COMPONENTS
(SYSTEM CONTROL / PERIPHERAL PCB)

MAIN CIRCUIT COMPONENTS
(SYSTEM CONTROL / PERIPHERAL PCB)

ILLUS. PL-60882	PART NO.	NAME OF PART	AMT.
1	00-449162	Kit - WiFi Module and Antenna (Must replace as set)	1
2	SD-015-40	Self-Tapping Screw 8-32 x 3/8 Phil. Pan Hd., Type TT	1
3	00-447108	Clamp P	1
4	00-447087	Bracket - Antenna	1
*13	45-000604-00003	Micro SD (Programed) (16GB) (Version 4.2.000)	1
5	SC-129-33	Mach. Screw 8-32 x 3/8 Phil. Pan Hd	2
6	NS-031-07	Stop Nut 8-32 Hex	1
7	00-447086	Isolator - Antenna	1
8	00-448189	Standoff (3/8 x 1-1/2)	4
9	00-447164-00014	Micro SD (Programmed) (8GB) (Version 1.12.0)	1
**10	00-448959-00004	Micro SD (Programmed) (16GB) (Version 2.6.0)	1
*11	00-450134-00004	Micro SD (Programmed) (16GB) (Version 4.1.300)	1
*12	45-000057-00002	Micro SD (Programmed) (16GB) (Version 3.3.680) (Walmart/Sam's Club Only)	1
14	00-448248	Board - System Control	1
15	00-447012	Bracket Assy. - Main Board	1
16	00-047080-00019	Insert	5
17	SC-129-33	Mach. Screw 8-32 x 3/8 Phil. Pan Hd	2
18	00-447780	Board - Peripheral Control	1
19	SD-015-40	Self-Tapping Screw 8-32 x 3/8 Phil. Pan Hd., Type TT	1
20	00-447046	Grommet	1
21	SD-039-75	Self-Tapping Screw 8-32 x 3/8, Type TT (Black)	3
22	00-447059	Cover - Network	1
23	00-443606	Seal - Power / Reset Button	1
24		Plate - Security (Part of Item 31)	1
25	WL-003-12	Lockwasher #8 Helical	1
26	00-183906	Screw (Special Fil. Hd.)	1
27	00-444424	Seal - Wire Roto (8 In.)	1
28	00-448030	Bracket Assy. (Panel Mount)	1
29	00-448056	Bracket Assy. (USB Panel Mount)	1
30	SD-015-40	Self-Tapping Screw 8-32 x 3/8 Phil. Pan Hd., Type TT	4
31	00-448245	Kit - Security Seal (With Security Plate) (Incls. Items 24 thru 27)	1
32	00-448365	Ferrite - Case (Clamp On)	1
33	SC-132-06	Screw - Mach M2 X 0.4 X 4MM	2
34	SC-112-42	Mach. Screw 6-32 x 1/2 Phil. Pan Hd	5
35	SC-129-33	Mach. Screw 8-32 x 3/8 Phil. Pan Hd	4

* Use only in scales where application V3.0 or higher is currently installed
** Use only in scales where application V2.6.0 or higher is currently installed

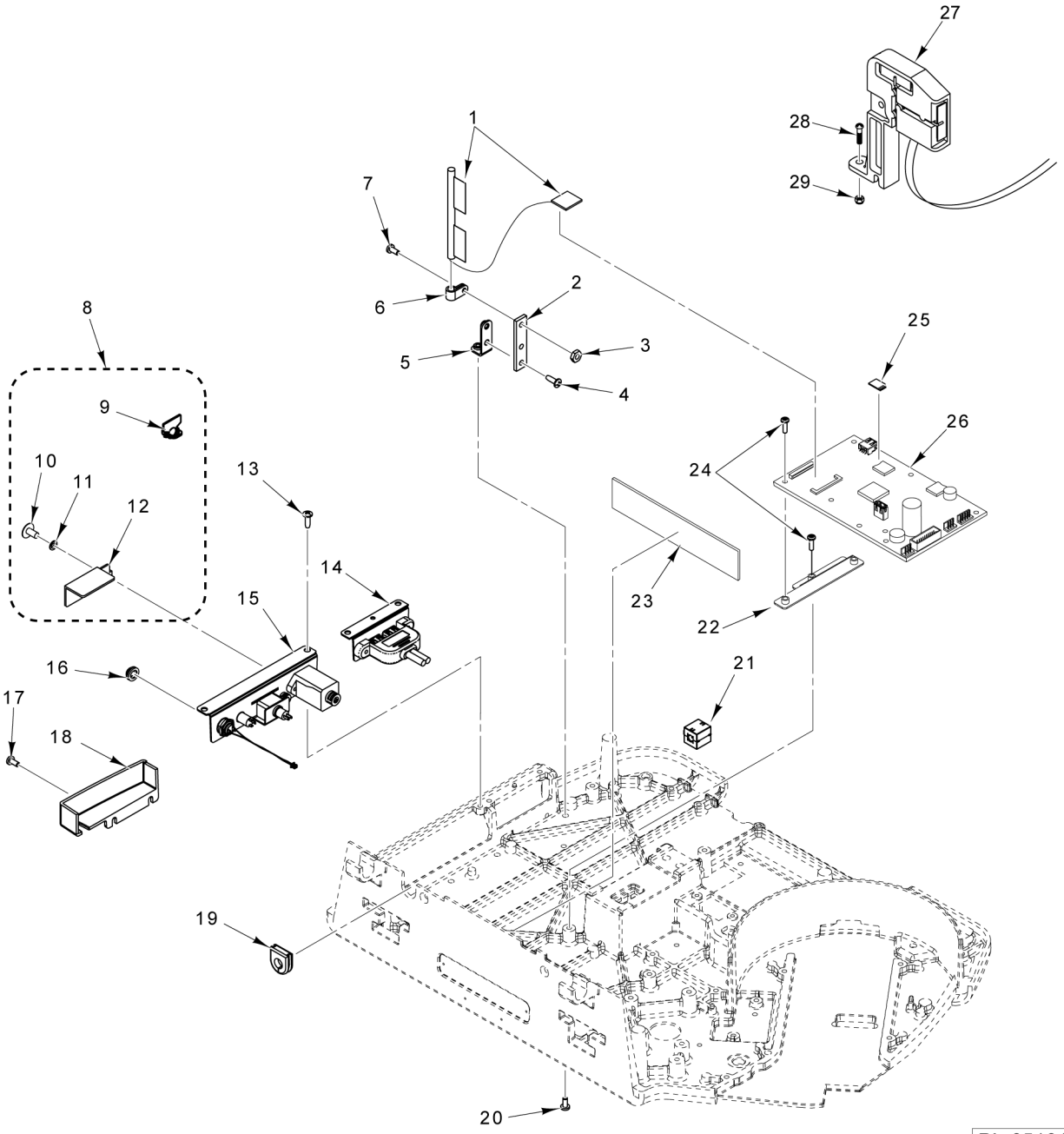

MAIN CIRCUIT COMPONENTS
(ARA PCB)

MAIN CIRCUIT COMPONENTS
(ARA PCB)

ILLUS. PL-65161	PART NO.	NAME OF PART	AMT.
*1	00-449711	Kit - Wifi Module & Antenna (Must replace as set)	1
2	00-447086	Isolator - Antenna	1
3	NS-031-07	Stop Nut 8-32 Hex	1
4	SC-129-33	Mach. Screw 8-32 x 3/8 Phil. Pan Hd	2
5	00-447087	Bracket - Antenna	1
6	00-447108	Clamp P	1
7	SD-015-40	Self-Tapping Screw 8-32 x 3/8 Phil. Pan Hd., Type TT	1
8	00-448245	Kit - Security Seal (With Security Plate) (Incls. Items 9 thru 12)	1
9	00-444424	Seal - Wire Roto (8 In.)	1
10	00-183906	Screw (Special Fil. Hd.)	1
11	WL-003-12	Lockwasher #8 Helical	1
12		Plate - Security (Part of Item 8)	1
13	SD-015-40	Self-Tapping Screw 8-32 x 3/8 Phil. Pan Hd., Type TT	4
14	00-448056	Bracket Assy. (USB Panel Mount)	1
15	00-448030	Bracket Assy. (Panel Mount)	1
16	00-443606	Seal - Power / Reset Button	1
17	SD-039-75	Self-Tapping Screw 8-32 x 3/8, Type TT (Black)	3
18	00-447059	Cover - Network	1
19	00-447046	Grommet	1
20	SD-015-40	Self-Tapping Screw 8-32 x 3/8 Phil. Pan Hd., Type TT	1
21	00-448365	Ferrite - Case (Clamp On)	1
**22	00-448321	Bracket - ARA Board	1
23	00-449512	Board - Touchscreen Control	1
24	SC-112-42	Mach. Screw 6-32 x 1/2 Phil. Pan Hd	5
25	00-450134-00004	Micro SD (Programmed) (16GB) (Version 4.1.300)	1
25	45-000602-00002	Micro SD (Programmed) (16GB) (Version 4.2.0)	1
***25	45-000057-00002	Micro SD (Programmed) (16GB) (Version 3.3.680) (Walmart/Sam's Club Only)	1
26	00-448420	Board - System Control (ARA - Dual)	1
27	45-000090	Kit - Silex AC Wireless	1
28	SC-018-34	Mach. Screw 8-32 x 1/2 Phil. Pan Hd	1
29	NS-047-15	Lock Nut 8-32 Flange	1

* Only use with ARA PCB.
** ARA System Control PCB Retrofit Only
*** Use only in scales where application V3.0 or higher is currently installed

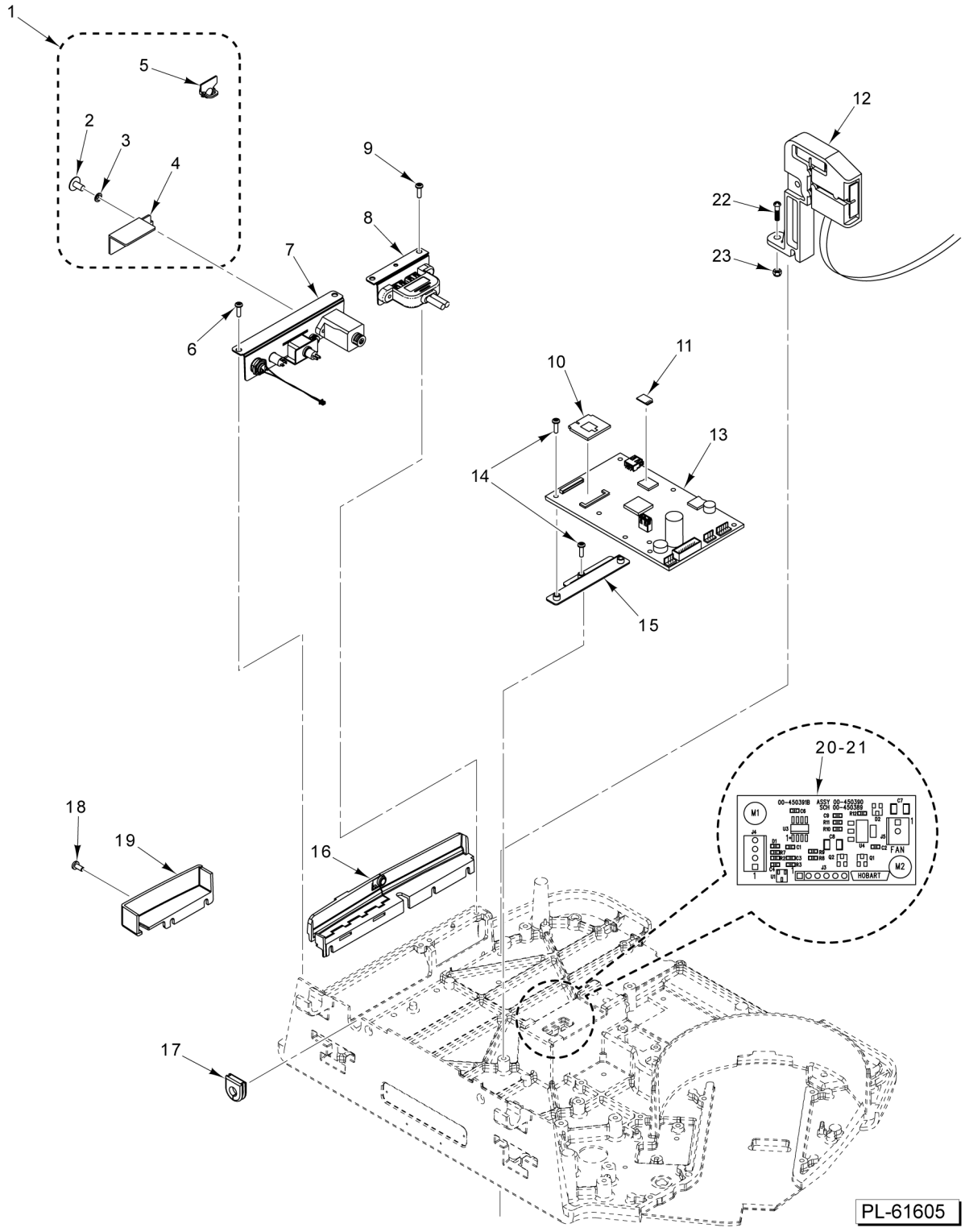

SYSTEM BOARD
(ARK) -5 UNITS PRIOR TO SN 451273551

SYSTEM BOARD
(ARK) -5 UNITS PRIOR TO SN 451273551

ILLUS. PL-61605	PART NO.	NAME OF PART	AMT.
1	00-448245	Kit - Security Seal (With Security Plate) (Incls. Items 2 thru 5)	1
2	00-183906	Screw (Special Fil. Hd.)	1
3	WL-003-12	Lockwasher #8 Helical	1
4		Plate - Security (Part Of Item 1)	1
5	00-444424	Seal - Wire Roto (8 In.)	1
6	SD-015-40	Self-Tapping Screw 8-32 x 3/8 Phil. Pan Hd., Type TT	2
7	00-448030	Bracket Assy. (Panel Mount)	1
8	00-448056		1
9	SD-015-40	Self-Tapping Screw 8-32 x 3/8 Phil. Pan Hd., Type TT	2
10	00-450011	Module (WiFi)	1
11	45-000019-00002	Micro SD, Programmed, HTm Series, 32G (Version 5.1.300)	1
12	45-000025	Kit - WIFI Module 802.11 AC	1
13	00-449970-00002	Board - System Control (ARK - Dual)	1
14	SC-112-42	Mach. Screw 6-32 x 1/2 Phil. Pan Hd	5
15	00-448321	Bracket - ARK Board	1
16	00-447070	Cover - Connector Assy. (Optional)	1
17	00-447046	Grommet	1
18	SD-039-75	Self-Tapping Screw 8-32 x 3/8, Type TT (Black)	3
19	00-447059	Cover - Network	1
20	00-450390	Control Board Assy. - Fan	1
21	00-043284	Fastener - Dual Lock	2
22	SC-018-34	Mach. Screw 8-32 x 1/2 Phil. Pan Hd	1
23	NS-047-15	Lock Nut 8-32 Flange	1

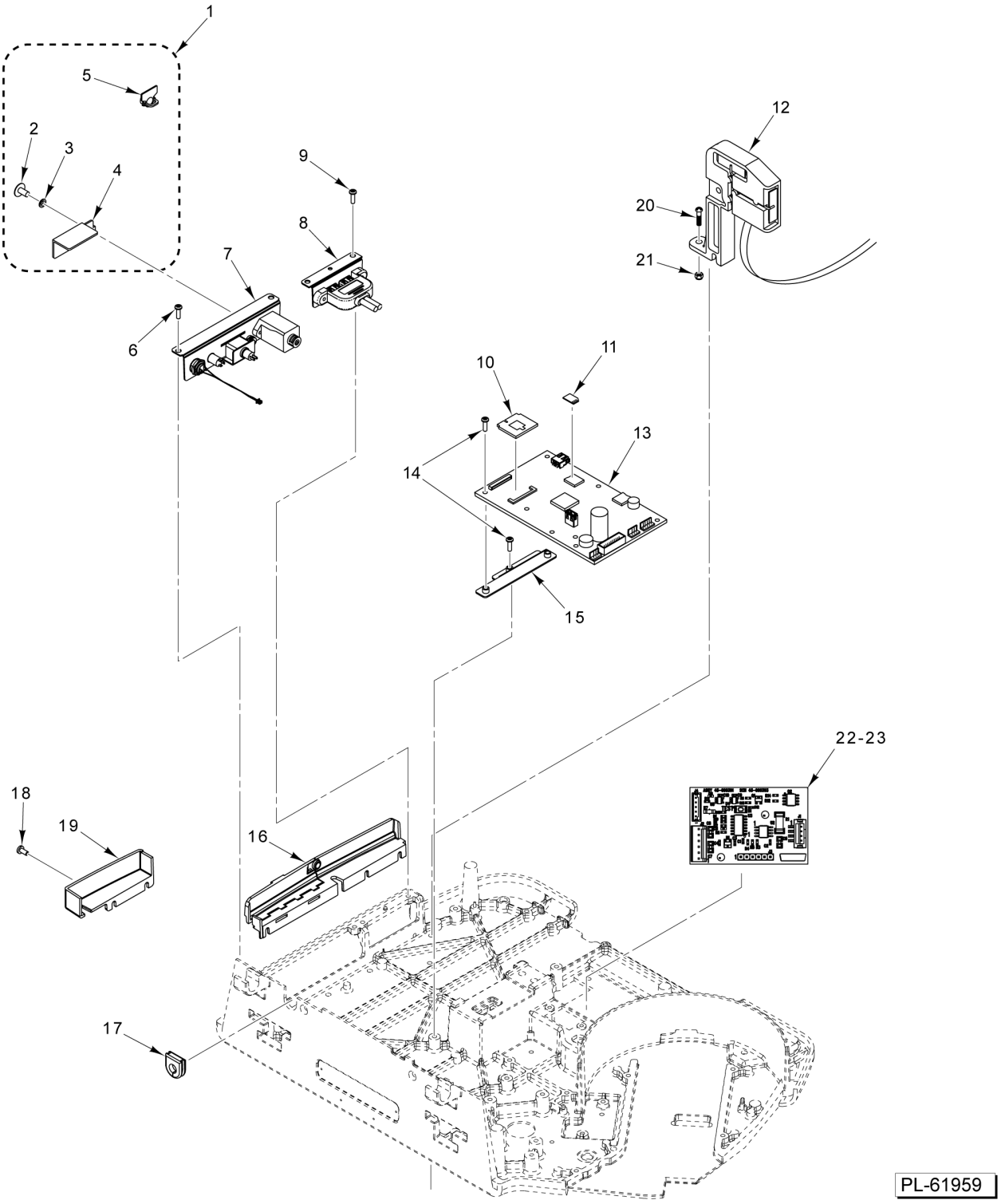

MAIN CIRCUIT COMPONENTS
(ARA PCB)
(-5 UNITS WITH CUTTER)

MAIN CIRCUIT COMPONENTS
(ARA PCB)
(-5 UNITS WITH CUTTER)

ILLUS. PL-61959	PART NO.	NAME OF PART	AMT.
1	00-448245	Kit - Security Seal (With Security Plate) (Incls. Items 2 thru 5)	1
2	00-183906	Screw (Special Fil. Hd.)	1
3	WL-003-12	Lockwasher #8 Helical	1
4		Plate - Security (Part Of Item 1)	1
5	00-444424	Seal - Wire Roto (8 In.)	1
6	SD-015-40	Self-Tapping Screw 8-32 x 3/8 Phil. Pan Hd., Type TT	2
7	00-448030	Bracket Assy. (Panel Mount)	1
8	00-448056	Bracket Assy. (USB Panel Mount)	1
9	SD-015-40	Self-Tapping Screw 8-32 x 3/8 Phil. Pan Hd., Type TT	2
10	00-450011	Module (WiFi)	1
11	45-000472-00001	Micro SD, Programmed, HT Series (ARA) (Version 5.1.322)	1
12	45-000025	Kit - WIFI Module 802.11 AC	1
13	00-448420-00003	Board - System Control (ARA - Dual)	1
14	SC-112-42	Mach. Screw 6-32 x 1/2 Phil. Pan Hd	5
15	00-448321	Bracket - ARK Board	1
16	00-447070	Cover - Connector Assy. (Optional)	1
17	00-447046	Grommet	1
18	SD-039-75	Self-Tapping Screw 8-32 x 3/8, Type TT (Black)	3
19	00-447059	Cover - Network	1
20	SC-018-34	Mach. Screw 8-32 x 1/2 Phil. Pan Hd	1
21	NS-047-15	Lock Nut 8-32 Flange	1
22	45-000301	Board Assy. - Cutter	1
23	SC-018-68	Mach. Screw 4-40 x 1/4 Phil. Pan Hd	2

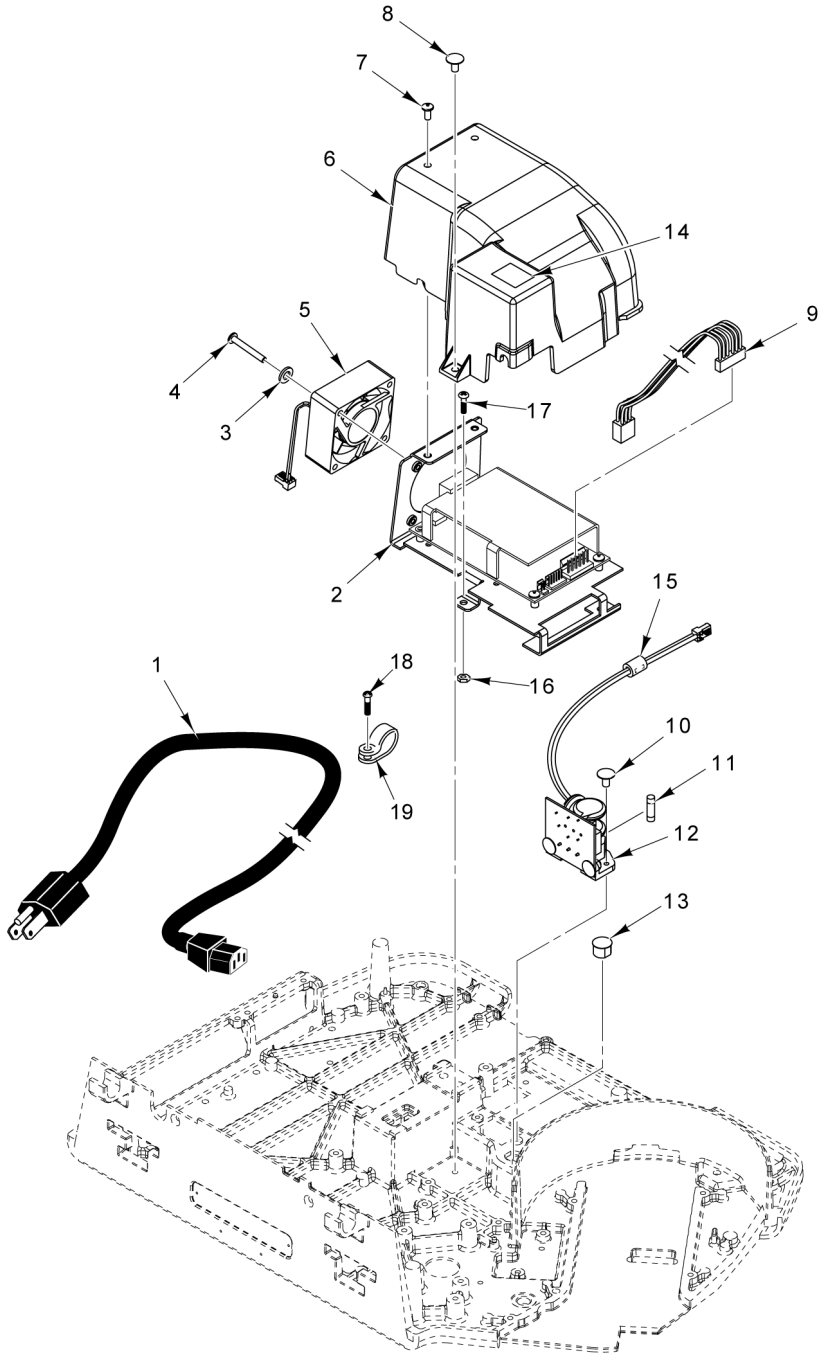

POWER SUPPLY

POWER SUPPLY

ILLUS. PL-60885	PART NO.	NAME OF PART	AMT.
1	00-044479	Cord - Power (120 V.)	1
2	00-444870-00002	Power Supply & Baffle Assy	1
3	WL-008-07	Lockwasher #8 Internal Shakeproof	3
4	SC-111-94	Mach. Screw 8-32 x 1-1/4 Phil. Pan Hd	3
5	00-444906	Fan Assy	1
6	00-444799	Shroud - Power Supply	1
7	SC-129-33	Mach. Screw 8-32 x 3/8 Phil. Pan Hd	2
8	SD-015-40	Self-Tapping Screw 8-32 x 3/8 Phil. Pan Hd., Type TT	1
9	00-444769	Cable Assy. - DC Power	1
10	SD-015-38	Self-Tapping Screw 6-32 x 3/8 Phil. Pan Hd., Type TT	2
11	FE-025-32	Fuse (250 V., 3.0 Amp.) (SLO) (Power Input Board)	1
12	00-448290	Board - Power Input (Incls. Item 11)	1
13	PB-005-28	Plug - Button (1/2 In.)	1
14	00-047052	Label - Fuse	1
15	00-447094	Ferrite (Clamp-On)	1
16	NS-047-15	Lock Nut 8-32 Flange	2
17	SD-033-87	Screw 8-32 x 3/4 Pan	2
18	SD-015-41	Self-Tapping Screw 8-32 x 1/2 Phil. Pan Hd., Type TT	1
19	00-447108	Clamp P	1

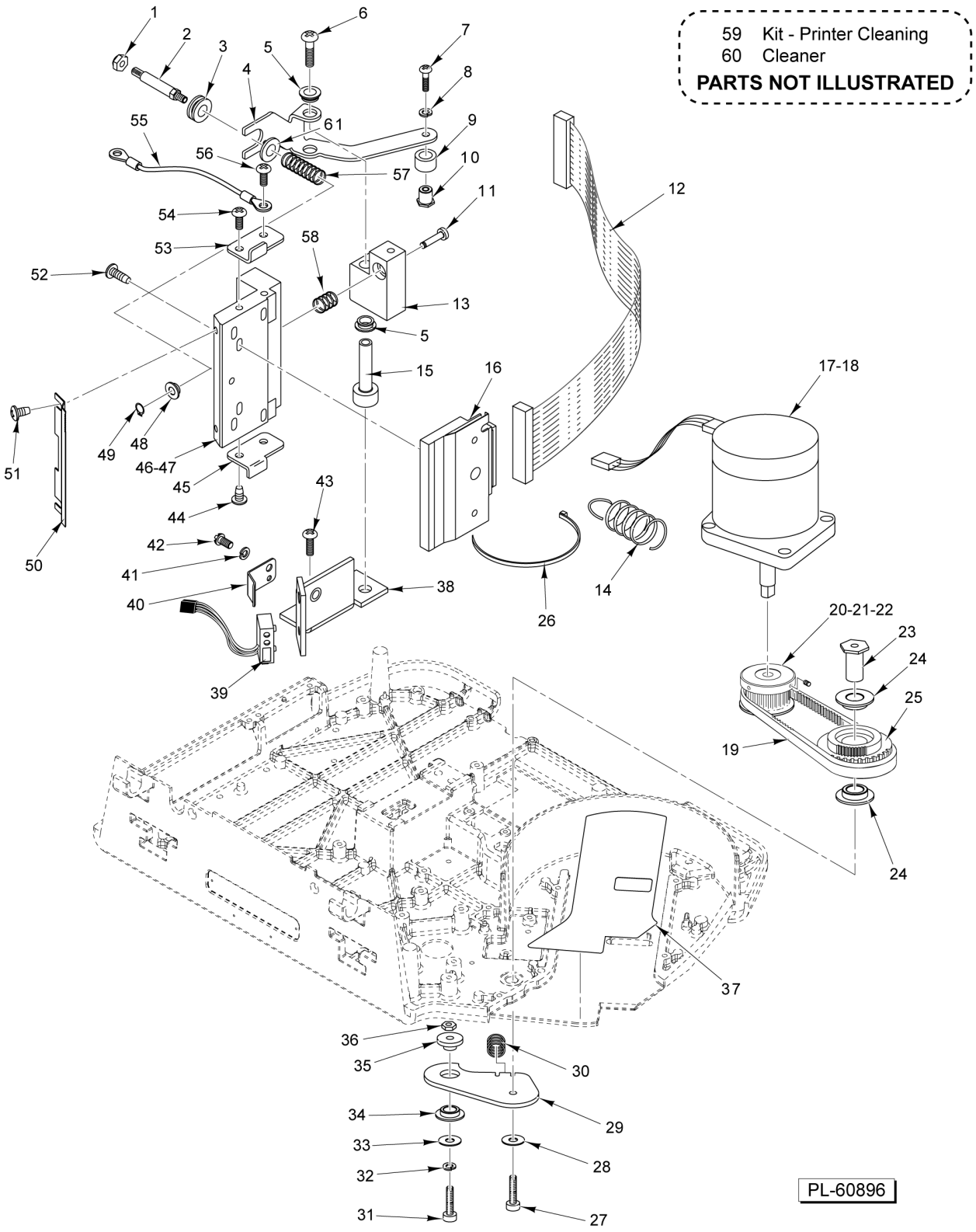
59 Kit - Printer Cleaning
60 Cleaner
PARTS NOT ILLUSTRATED
PL-60896

PRINTER

PRINTER

ILLUS. PL-60896	PART NO.	NAME OF PART	AMT.
1	NS-031-49	Stop Nut 10-32 Hex (SST)	1
2	00-043267	Stud - Adjusting	1
3	00-043382	Bushing - Stud	1
4	00-043299	Bracket - Spring Pivot	1
5	00-043253	Bushing - Nyliner	2
6	SD-038-05	Self-Tapping Screw 8-32 x 1-3/4 Phil. Pan Hd., Type TT	1
7	SC-018-31	Mach. Screw 8-32 x 3/8 Phil. Pan Hd	1
8	WL-008-07	Lockwasher #8 Internal Shakeproof	1
9	00-043385	Roller - Pivot Arm	1
10	00-043386	Retainer - Roller	1
11	00-047424	Shaft - Printhead Pivot	1
12	00-444846	Cable Assy. - Printhead	1
13	00-047423	Pivot Block - Printhead	1
14	00-043387	Spring - Extension	1
15	00-047441	Sleeve - Pivot	1
16	00-448003	Printhead - Thermal (Kyocera)	1
17	00-440142-00002	Motor Assy. - Stepper	1
18	SD-015-40	Self-Tapping Screw 8-32 x 3/8 Phil. Pan Hd., Type TT	3
19	00-442823	Belt - Timing	1
20	00-442822	Pulley - Take-Up Motor	1
21	SC-047-74	Set Screw 8-32 x 1/4 Hex Hdls. Cup Pt	2
22	00-512987	Adhesive (Loctite #222, Purple)	AR
23	00-441758	Shaft - Pulley & Gear	1
24	00-043365	Bushing	2
25	00-043250	Pulley & Gear Assy. (Incls. Item 24)	1
26	00-255502	Tie - Cable Locking	1
27	SC-092-36	Cap Screw 6-32 x 1/2 Hex Socket Hd	1
28	WL-008-02	Lockwasher #6 Internal Shakeproof	1
29	00-447373	Plate - Pivot (Incls. Item 34)	1
30	00-048374	Spring - Printhead Adjusting	1
31	SC-111-83	Cap Screw 6-32 x 3/4 Hex Socket Hd	1
32	WL-008-02	Lockwasher #6 Internal Shakeproof	1
33	WS-019-41	Washer (SST)	1
34	00-043365	Bushing	1
35	00-441760	Bushing - Gear Adjusting	1
36	NS-031-03	Stop Nut 6-32 Hex	1
37	00-441701	Label - Anti-Friction	1
38	00-047442	Bracket - Label Taken Mtg	1
39	00-043610	Sensor Assy. - Label Taken	1
40	00-043394	Bracket - Label Taken	1
41	WL-008-07	Lockwasher #8 Internal Shakeproof	1
42	SC-018-31	Mach. Screw 8-32 x 3/8 Phil. Pan Hd	1
43	SD-015-40	Self-Tapping Screw 8-32 x 3/8 Phil. Pan Hd., Type TT	2
44	SD-015-37	Self-Tapping Screw 6-32 x 1/4 Phil. Pan Hd., Type TT	2
61	WS-019-10	Washer (SST)	1
45	00-047438	Stop - Printhead Lower	1
46	00-442996	Heat Sink and Bushing Assy. (Incls. Item 48)	1
47	00-519504	Thermo Joint Compound (2 Oz.)	AR
48	00-043365	Bushing	2
49	RR-006-22	Retaining Ring 1/4 In. (SST)	1
50	00-032887	Tearbar	1
51	SD-015-37	Self-Tapping Screw 6-32 x 1/4 Phil. Pan Hd., Type TT	2
52	SA-021-46	Screw Assy. M3 x 0.5 x 12 mm Phil. Pan Hd	2
53	00-047437	Stop - Printhead Upper	1
54	SD-015-37	Self-Tapping Screw 6-32 x 1/4 Phil. Pan Hd., Type TT	1

PRINTER

ILLUS. PL-60896	PART NO.	NAME OF PART	AMT.
55	00-049396	Wire - Drain (Ground)	1
56	SD-015-37	Self-Tapping Screw 6-32 x 1/4 Phil. Pan Hd., Type TT	1
57	00-043333	Spring - Printhead	1
58	00-048374	Spring - Printhead Adjusting	1
59	00-913096-00001	Kit - Thermal Printer Cleaning	1
60	00-558169	Cleaner (Electronics) (12 Oz. Can)	AR
61	WS-019-10	Washer (SST)	1

NOTES

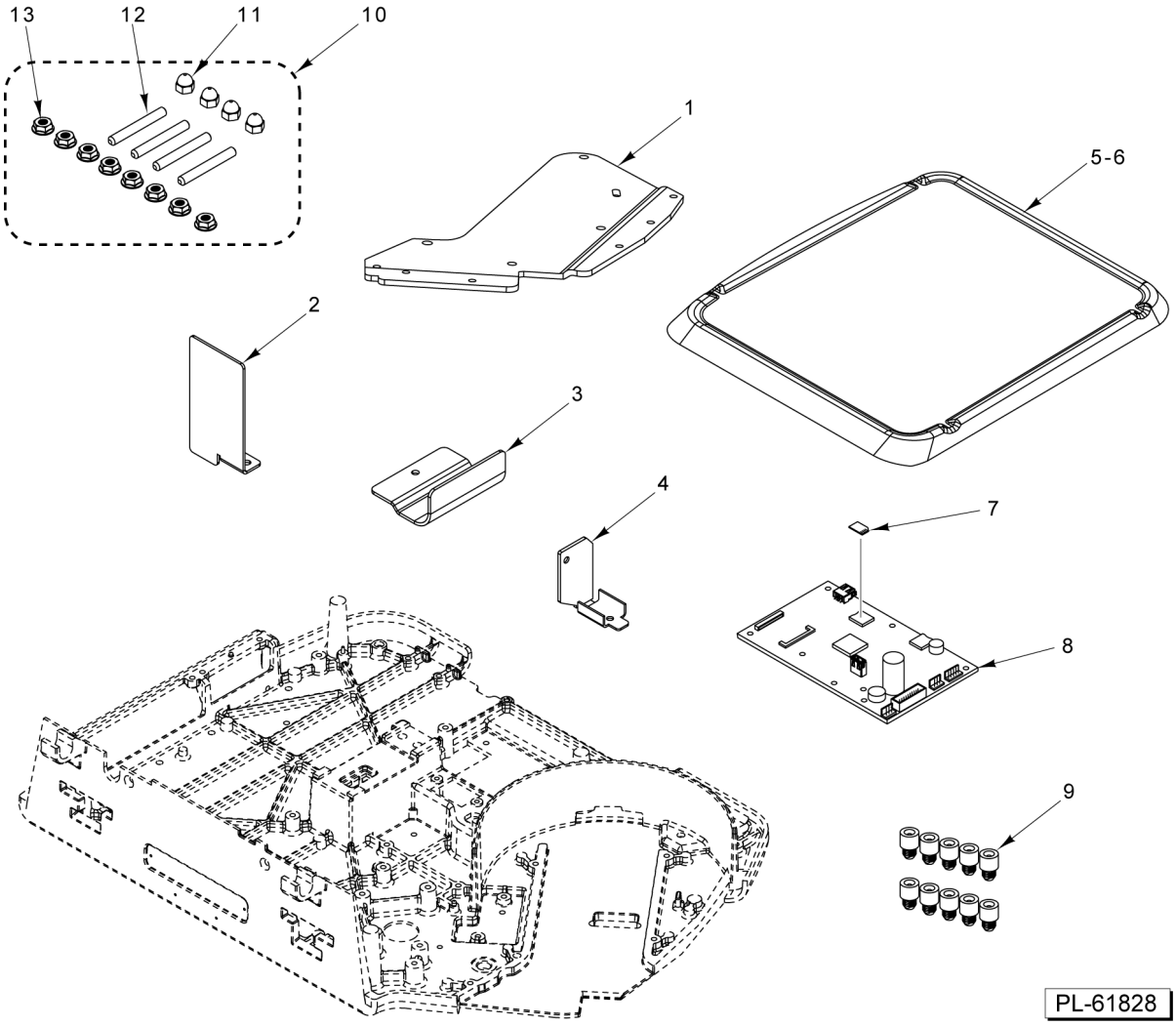

HTI-SSLSC
(NO PRINTER)

HTI-SSLSC
(NO PRINTER)

ILLUS. PL-61828	PART NO.	NAME OF PART	AMT.
1	00-450808	Bracket - Fascia	1
2	00-450813	Cover - Label Opening	1
3	00-450819	Cover - Latch Opening	1
4	00-450841	Cover - Reset Switch	1
5	00-450856	Platter (Inverted)	1
6	00-450857	Platter (Black) (Inverted)	1
7	45-000496-00001	Micro SD (Programmed) (Version 4.1.718) (No Printer) (Walmart US)	1
8	45-000481	Board - System Control (ARA) (No Printer)	1
9	00-451227	Mount - Platter (10 Pc.)	1
10	45-000842	Kit - Stand Mounting Hardware (Incls. Items 11, 12, & 13)	1
11	NS-025-04	Crown Nut 1/4-20 (SST)	4
12	SC-133-01	Screw - Set	4
13	NS-049-06	Lock Nut 1/4-20 (SST)	8

50 00-444875-00005 Cassette Assy.

PART NOT ILLUSTRATED

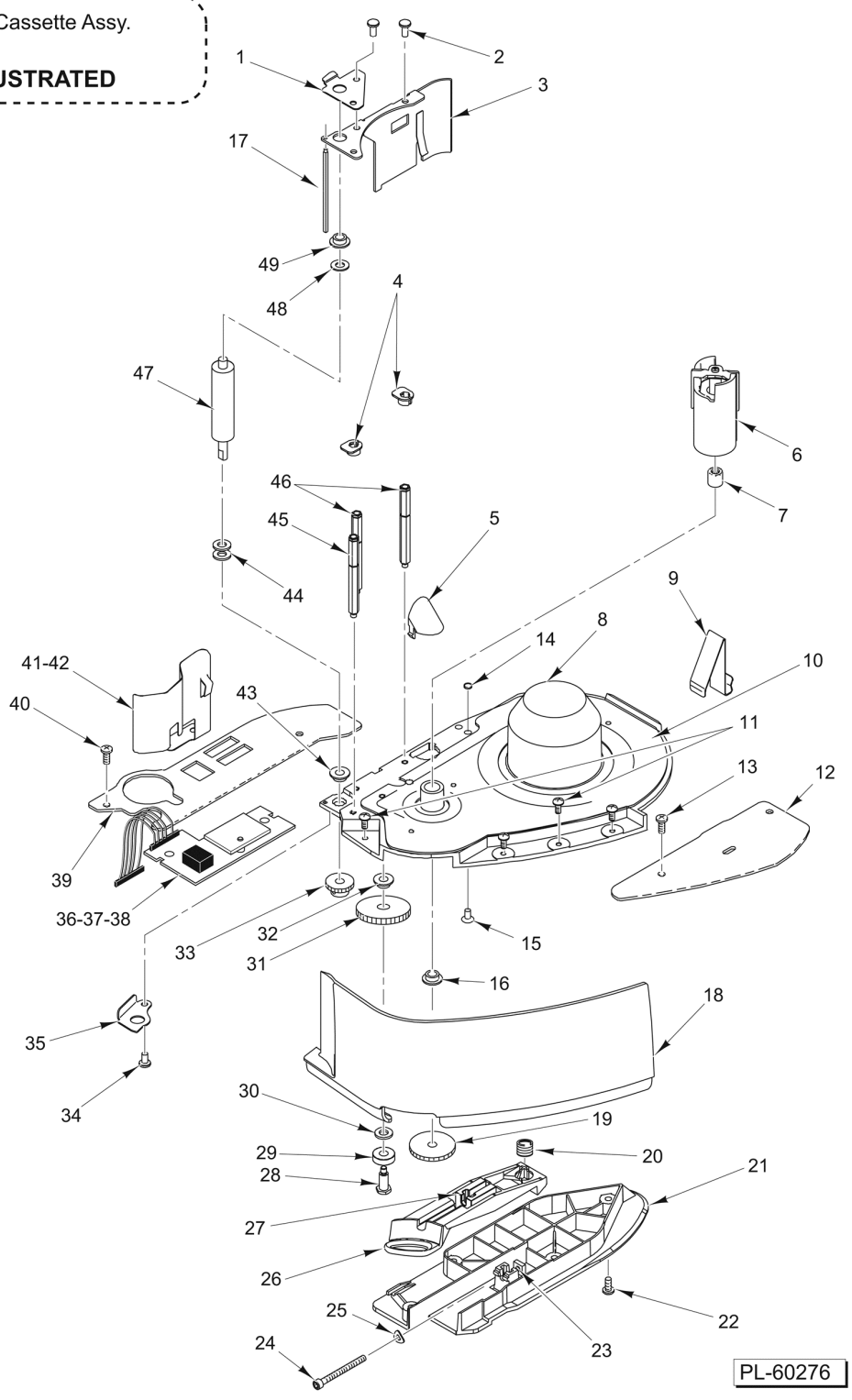

CASSETTE
(WIDE LABEL)

CASSETTE
(WIDE LABEL)

ILLUS. PL-60276	PART NO.	NAME OF PART	AMT.
1	00-047456	Plate - Cassette Locating (Upper)	1
2	00-048489	Mach. Screw 8-32 x 3/8 Phil. Pan Hd	3
3	00-047392	Retaining Plate - Roller	1
4	00-043369	Guide - Label	2
5	00-043367	Reflector	1
6	00-444660	Take-Up Assy	1
7	00-043396	Needle Bearing	1
8	00-043351	Base - Cassette	1
9	00-443735	Spring - Cassette Eject	1
10	00-440635	Label - Threading Instructions	1
11	SA-021-39	Screw Assy. 8-32 x 3/8 Phil. Pan Hd	4
12	00-043343	Rail - Guide (RH)	1
13	SD-015-40	Self-Tapping Screw 8-32 x 3/8 Phil. Pan Hd., Type TT	2
14	00-446589	Magnet - Disc	1
15	00-446917	Mach. Screw 8-32 x 1/8 Phil. Pan Hd	1
16	00-043365	Bushing	1
17	00-043357	Peel Bar	1
18	00-447051	Cover - Cassette Front	1
19	00-043362	Gear - Take-Up (Incls. Set Screw)	1
20	00-043356	Spring - Cassette Latch	1
21	00-043355	Guide - Cassette	1
22	SD-015-40	Self-Tapping Screw 8-32 x 3/8 Phil. Pan Hd., Type TT	4
23	NS-008-25	Nut 8-32 Sq. Hd	1
24	00-441172	Cap Screw 8-32 x 1-3/4 Hex Socket Hd	1
25	00-043271	Washer - Wavy	1
26	00-043353	Latch - Cassette	1
27	00-043354	Pivot Block - Adjust	1
28	00-043363	Shaft - Idler	1
29	00-131761	Ball Bearing - Double-Shielded Radial	1
30	00-043269	Washer	1
31	00-032974	Gear - Idler (Incls. Item 32)	1
32	00-043365	Bushing	1
33	00-043360	Gear - Roller (Incls. Set Screw)	1
34	SC-018-34	Mach. Screw 8-32 x 1/2 Phil. Pan Hd	1
35	00-047457	Plate - Cassette Locating (Lower)	1
36	00-446820	Kit - Media Hall Sensor	1
37	00-044631	Insulator - Media Sensor Board	1
38	SD-015-40	Self-Tapping Screw 8-32 x 3/8 Phil. Pan Hd., Type TT	2
39	00-043270	Rail - Guide (LH)	1
40	SD-015-40	Self-Tapping Screw 8-32 x 3/8 Phil. Pan Hd., Type TT	2
41	00-046479	Spring - Label Guide	1
42	SD-015-40	Self-Tapping Screw 8-32 x 3/8 Phil. Pan Hd., Type TT	1
43	00-047458	Bearing - Flange	1
44	00-043269	Washer	2
45	00-047455	Standoff	1
46	00-032914	Standoff	2
47	00-047506	Roller - Print	1
48	00-043269	Washer	1
49	00-043365	Bushing	1
50	00-444875-00005	Cassette Assy	1

53 Cassette Assy. - Linerless
54 Cassette Assy. - Linerless (Small Hub)

PARTS NOT ILLUSTRATED

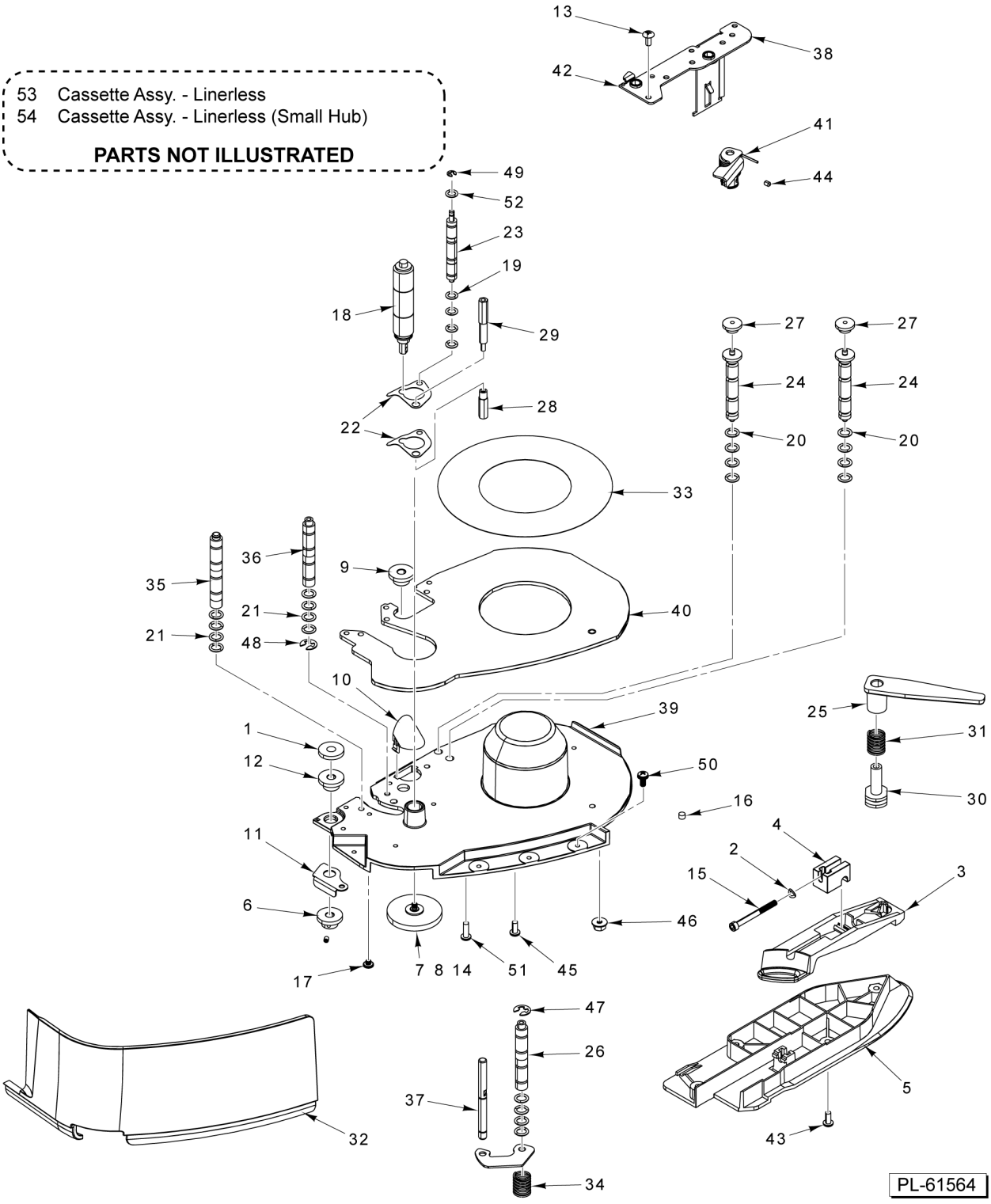

CASSETTE (LINERLESS)

CASSETTE (LINERLESS)

ILLUS. PL-61564	PART NO.	NAME OF PART	AMT.
1	00-043269	Washer	4
2	00-043271	Washer - Wavy	1
3	00-043353	Latch - Cassette	1
4	00-043354	Pivot Block - Adjust	1
5	00-043355	Guide - Cassette	1
6	00-043360	Gear - Roller (Incls. Set Screw)	1
7	00-043361	Gear - Idler	1
8	00-043363	Shaft - Idler	1
9	00-043365	Bushing	2
10	00-043367	Reflector	1
11	00-047457	Plate - Cassette Locating (Lower)	1
12	00-047458	Bearing - Flange	1
13	00-048489	Mach. Screw 8-32 x 3/8 Phil. Pan Hd	5
14	00-131761	Ball Bearing - Double-Shielded Radial	1
15	00-441172	Cap Screw 8-32 x 1-3/4 Hex Socket Hd	1
16	00-446589	Magnet - Disc	1
17	00-446917	Mach. Screw 8-32 x 1/8 Phil. Pan Hd	1
18	00-450142	Roller - Print	1
19	00-450282-00001	O-Ring	4
20	00-450282-00003	O-Ring	8
21	00-450282-00005	O-Ring	AR
22	00-450289	Guide - Label	2
23	00-450291	Roller	2
24	00-450294	Shaft	3
25	00-450295	Guide - Core	1
26	00-450296	Roller	1
27	00-450297	Roller	2
28	00-450298	Spacer - Lower	1
29	00-450299	Stand-Off	1
30	00-450302	Pivot - Retainer	1
31	00-450303	Spring - Guide	1
32	00-450304	Cover	1
33	00-450341	Liner - Label Roll	1
34	00-450430	Spring - Cassette Latch	1
35	00-450437	Spacer	3
36	00-450438	Roller	6
37	00-450453	Shaft Assy. - Tensioner	1
38	00-450466	Lever & Hub Assy	1
39	00-450469	Base - Cassette	1
40	00-450470	Plate Assy. - Label Spacer	1
41	00-450476	Spring - Tensioner	1
42	00-450497	Bracket Assy. - Roller	1
43	SD-015-40	Self-Tapping Screw 8-32 x 3/8 Phil. Pan Hd., Type TT	4
44	SC-132-21	Screw Set 6-32 x 3/16	4
45	SC-020-29	Mach. Screw 8-32 x 1/2 Phil. Flat Hd	1
46	NS-047-15	Lock Nut 8-32 Flange	1
47	RR-006-03	Retaining Ring	1
48	RR-006-22	Retaining Ring 1/4 In. (SST)	2
49	RR-011-69	Retaining Ring	6
50	SA-021-39	Screw Assy. 8-32 x 3/8 Phil. Pan Hd	4
51	SC-018-34	Mach. Screw 8-32 x 1/2 Phil. Pan Hd	3
52	45-000023	Guide - Disk	1
53	00-450500-00002	Cassette Assy. - Linerless (Incls. Items 1 thru 52)	1
54	45-000080	Cassette Assy. - Linerless (Small Hub)	1

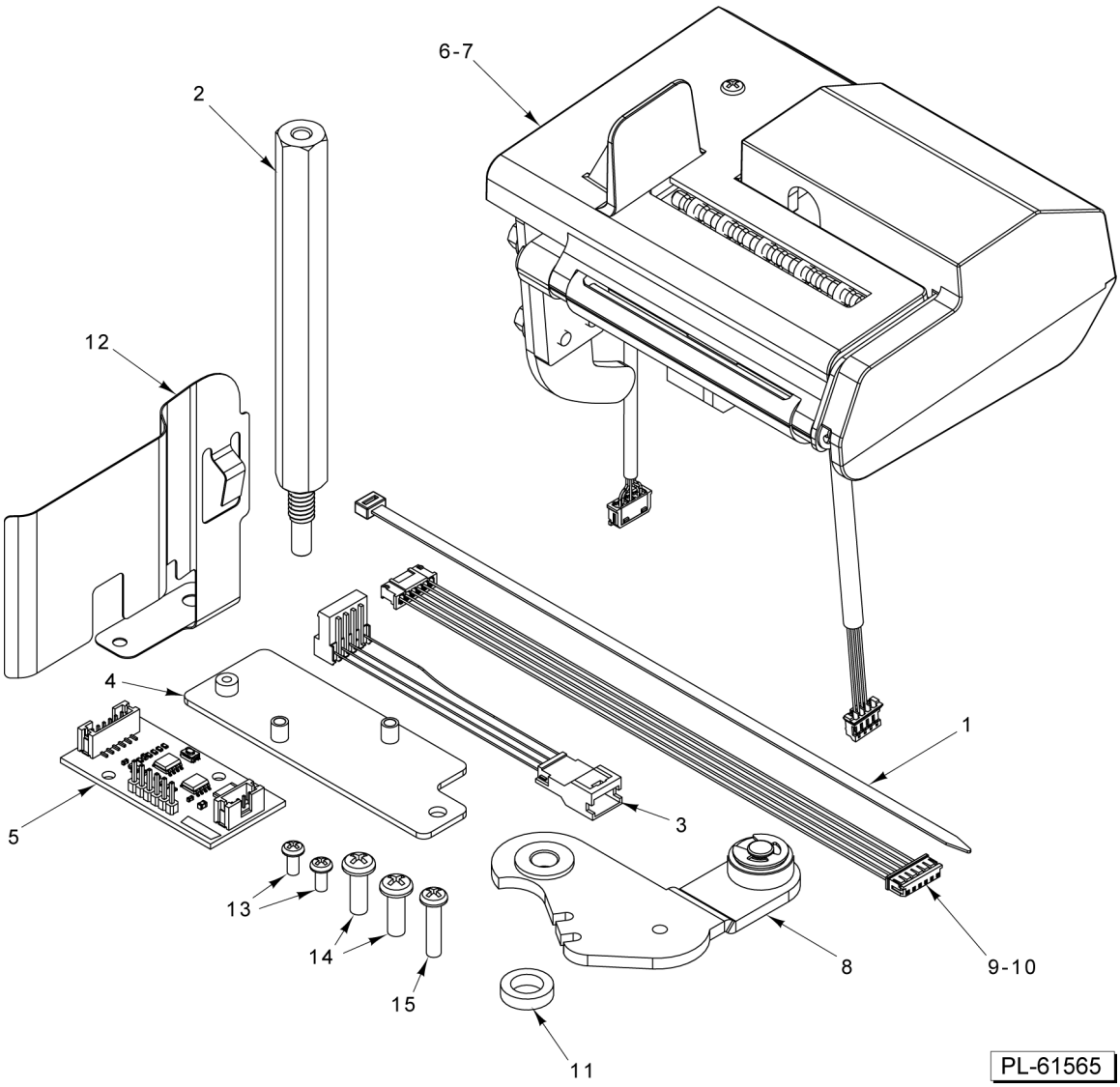

LABEL CUTTER KIT
(SELF SERVE)

LABEL CUTTER KIT
(SELF SERVE)

ILLUS. PL-61565	PART NO.	NAME OF PART	AMT.
1	00-255502	Tie - Cable Locking	1
2	00-449394	Standoff	1
3	00-450039	Cable Assy. (LTS Adapter)	1
4	00-450167	Plate Assy. - Cutter Board	1
5	00-450170	Board Assy. - Cutter	1
6	45-000045	Cutter Assy. (Incls. Sensor & Power Cable) (With Self Serve UL Safety Features)	1
7	00-450230	Label Reversing Assy	1
8	00-450312	Cable Assy. (Cutter Control)	1
9	00-450343	Restricting Ring	1
10	00-450463	Spring - Lable Guide	1
11	SC-018-68	Mach. Screw 4-40 x 1/4 Phil. Pan Hd	2
12	SD-015-41	Self-Tapping Screw 8-32 x 1/2 Phil. Pan Hd., Type TT	2
13	SC-113-37	Mach. Screw 6-32 x 5/8 Phil. Pan Hd	1

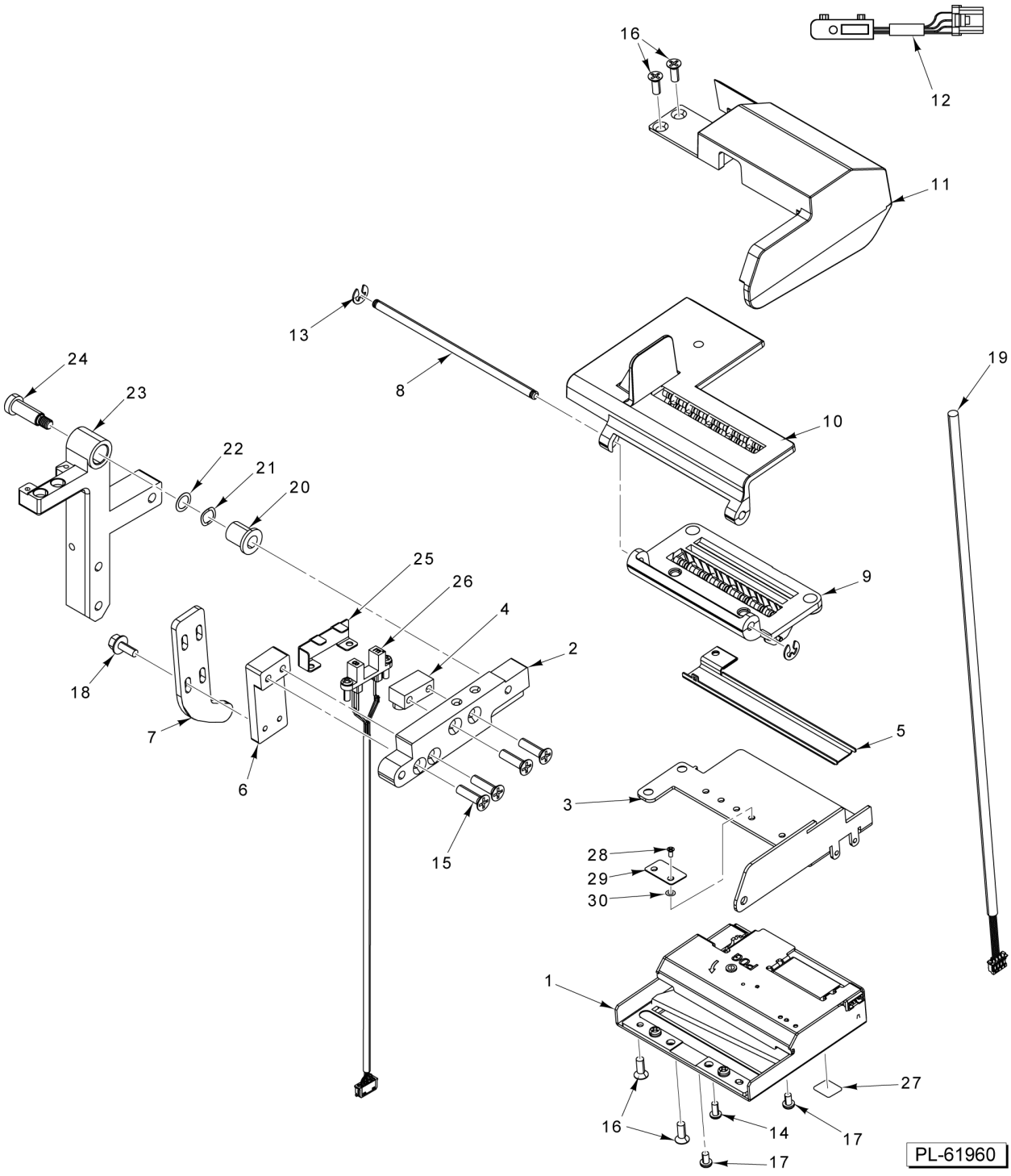

LABEL CUTTER ASSEMBLY (ARK)

LABEL CUTTER ASSEMBLY (ARK)

ILLUS. PL-61960	PART NO.	NAME OF PART	AMT.
1	00-450202	Cutter	1
2	00-450203	Block - Base Pivot	1
3	00-450204	Housing - Cutter	1
4	00-450205	Block - Stop	1
5	00-450206	Wireway	1
6	00-450207	Block - Hook Mounting	1
7	00-450208	Hook - Anti-Reverse	1
8	00-450209	Pin - Pivot	1
9	00-450231	Infeed Assy	1
10	45-000232	Outfeel Assy	1
11	00-450240	Sensor Cover Assy. (Incls. Item 12)	1
12	00-450040	Sensor Assy	1
13	RR-011-69	Retaining Ring	2
14	SC-018-68	Mach. Screw 4-40 x 1/4 Phil. Pan Hd	1
15	SC-022-10	Mach. Screw 8-32 x 5/8 Slotted Flat Hd. (SST)	4
16	SC-022-79	Mach. Screw 6-32 x 3/8 Phil. Flat Hd. (SST)	4
17	SC-124-98	Mach. Screw M3 x 0.5 x 5mm Phil. Pan Hd	2
18	SC-133-12	Mach. Screw Special 6-32 x 3/8	4
19	00-450314	Cable Assy. (Cutter)	1
20	00-450224	Bushing (Bronze)	1
21	00-450493	Washer - Wavy	1
22	00-450344	Shim - Cutter Pivot	1
23	00-450201	Block - Cutter Mount	1
24	00-450225	Screw - Shoulder	1
25	00-450237	Bracket - Interlock Shield	1
26	00-450313	Sensor Assy. - Cutter Interlock	1
27	00-450532	Label - Warning	2
28	SC-122-97	Mach. Screw 4-40 x 3/16 Phil. Pan Hd	2
29	45-000054	Plate Assy., Infeed Lock (Incls. Items 28 & 30)	1
30	45-000052	Washer - Lock	2

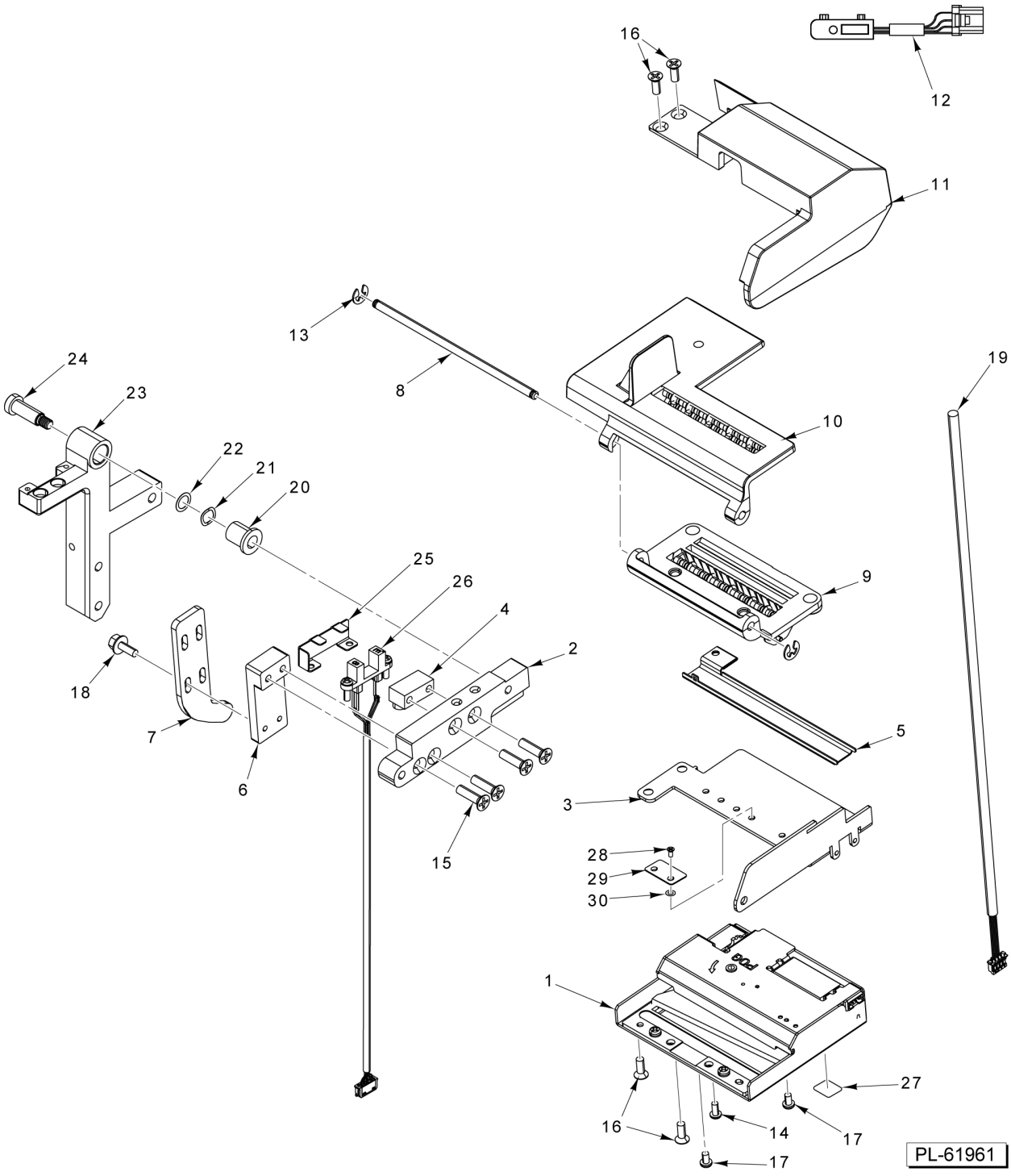

LABEL CUTTER ASSEMBLY (ARA)

LABEL CUTTER ASSEMBLY (ARA)

ILLUS. PL-61961	PART NO.	NAME OF PART	AMT.
1	00-450202	Cutter	1
2	00-450203	Block - Base Pivot	1
3	00-450204	Housing - Cutter	1
4	00-450205	Block - Stop	1
5	00-450206	Wireway	1
6	00-450207	Block - Hook Mounting	1
7	00-450208	Hook - Anti-Reverse	1
8	00-450209	Pin - Pivot	1
9	00-450231	Infeed Assy	1
10	45-000232	Outfeel Assy	1
11	00-450240	Sensor Cover Assy. (Incls. Item 12)	1
12	00-450040	Sensor Assy	1
13	RR-011-69	Retaining Ring	2
14	SC-018-68	Mach. Screw 4-40 x 1/4 Phil. Pan Hd	1
15	SC-022-10	Mach. Screw 8-32 x 5/8 Slotted Flat Hd. (SST)	4
16	SC-022-79	Mach. Screw 6-32 x 3/8 Phil. Flat Hd. (SST)	4
17	SC-124-98	Mach. Screw M3 x 0.5 x 5mm Phil. Pan Hd	2
18	SC-133-12	Mach. Screw Special 6-32 x 3/8	4
19	00-450314	Cable Assy. (Cutter)	1
20	00-450224	Bushing (Bronze)	1
21	00-450493	Washer - Wavy	1
22	00-450344	Shim - Cutter Pivot	1
23	00-450201	Block - Cutter Mount	1
24	00-450225	Screw - Shoulder	1
25	00-450237	Bracket - Interlock Shield	1
26	45-000334	Sensor Assy. - Cutter Interlock	1
27	00-450532	Label - Warning	2
28	SC-122-97	Mach. Screw 4-40 x 3/16 Phil. Pan Hd	2
29	45-000054	Plate Assy., Infeed Lock (Incls. Items 28 & 30)	1
30	45-000052	Washer - Lock	2

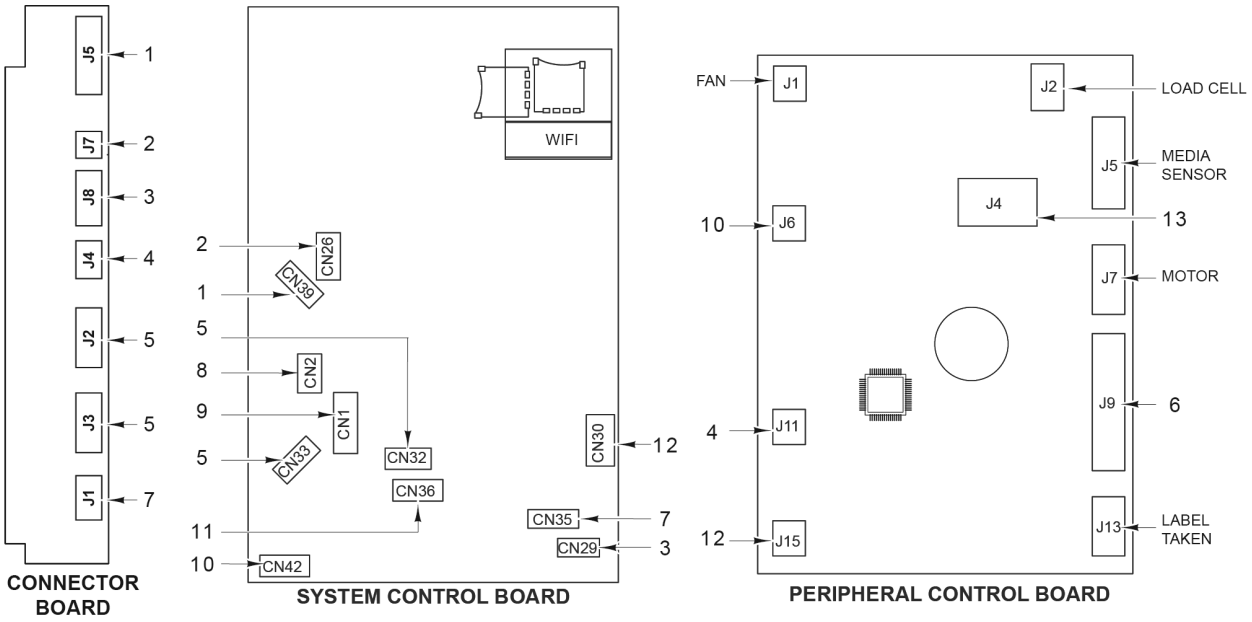

ITEM	CABLE PN	CONNECTOR BOARD CONNECTOR	SYS CNTR BOARD CONNECTOR	PERIPERAL BOARD CONNECTOR	FUNCTION (COMPONENT)
1	00-447524	J5	CN39	NA	ETHERNET - DATA (CABLE)
2	00-447028	J7	CN26	NA	ETHERNET - LED (CABLE)
3	00-447029	J8	CN29	NA	AUDIO (CABLE)
4	00-447025	J4	NA	J11	SERVICE SWITCH (CABLE)
5	00-447024	J2	CN32	NA	USB - HUB (CABLE)
		J3	CN33	NA	USB - HUB (CABLE)
6	00-444846	NA	NA	J9	PRINTHEAD DATA (CABLE)
7	00-447026	J1	CN35	NA	REBOOT / SHUTDOWN SWITCH (CABLE)
8	00-447032	NA	CN2	NA	CUSTOMER DISPLAY (CABLE)
9	00-447095	NA	CN1	NA	OPERATOR DISPLAY (CABLE)
10	00-447023	NA	CN42	J6	24 VDC POWER (CABLE)
11	00-447167	NA	CN36	NA	TOUCHSCREEN (CABLE)
12	00-447544	NA	CN30	J15	USB - HOST (CABLE)
13	00-444769	NA	NA	J4	DC POWER (CABLE)

PL-65164

CABLES - CONNECTOR BOARD (SYSTEM CONTROL / PERIPHERAL BOARD)

CABLES - CONNECTOR BOARD
(SYSTEM CONTROL / PERIPHERAL BOARD)

ILLUS. PL-65164	PART NO.	NAME OF PART	AMT.
1	00-447524	Cable Assy. - Ethernet Data	1
2	00-447028	Cable Assy. - Ethernet LED	1
3	00-447029	Cable Assy. - Audio	1
4	00-447025	Cable Assy. - Service Switch	1
5	00-447024	Cable Assy. - USB Hub	2
6	00-444846	Cable Assy. - Printhead Data	1
7	00-447026	Cable Assy. - Reboot Switch	1
8	00-447032	Cable Assy. - Customer Display (Elevated)	1
9	00-447095	Cable Assy. - Operator Display	1
10	00-447023	Cable Assy. - 24 VDC Power	1
11	00-447167	Cable Assy. - Touchscreen	1
12	00-447544	Cable Assy. - USB (Host)	1
13	00-444769	Cable Assy. - DC Power	1

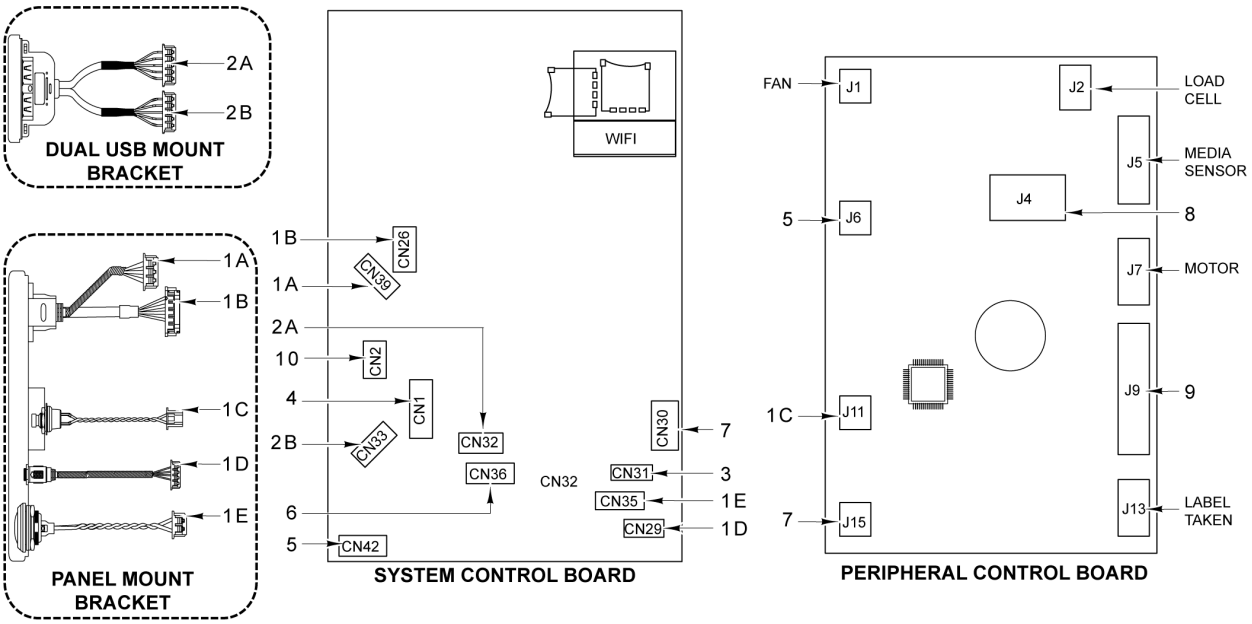

ITEM	CABLE PN	SYS CNTRL BOARD CONNECTOR	PERIPHERAL BOARD CONNECTOR	FUNCTION (COMPONENT)
1A	00-448030	CN39	NA	ETHERNET - DATA (PANEL MOUNT BRACKET CABLE)
1B		CN26	NA	ETHERNET - LED (PANEL MOUNT BRACKET CABLE)
1C		NA	J11	SERVICE SWITCH (PANEL MOUNT BRACKET CABLE)
1D		CN29	NA	AUDIO (PANEL MOUNT BRACKET)
1E		CN35	NA	REBOOT / SHUTDOWN SWITCH (PANEL MOUNT BRACKET CABLE)
2A	00-448056	CN33	NA	USB (DUAL USB MOUNTING BRACKET CABLE)
2B		CN32	NA	USB (DUAL USB MOUNTING BRACKET CABLE)
3	00-448195	CN31	NA	USB - SCANNER (CABLE)
4	00-448199	CN1	NA	OPERATOR DISPLAY (CABLE)
5	00-447023	CN42	J6	24 VDC POWER (CABLE)
6	00-448198	CN36	NA	TOUCHSCREEN (CABLE)
7	00-447544	CN30	J15	USB - HOST (CABLE)
8	00-444769	NA	J4	DC POWER (CABLE)
9	00-444846	NA	J9	PRINTEHAD DATA (CABLE)
10	00-447032	CN2	NA	CUSTOMER DISPLAY (CABLE)

PL-65179

CABLES - PANEL MOUNT (SYSTEM CONTROL / PERIPHERAL BOARD)

CABLES - PANEL MOUNT
(SYSTEM CONTROL / PERIPHERAL BOARD)

ILLUS. PL-65179	PART NO.	NAME OF PART	AMT.
1	00-448030	Bracket Assy. (Panel Mount)	1
2	00-448056	Bracket Assy. (USB Panel Mount)	1
3	00-448195	Cable Assy. - USB (Scanner)	1
4	00-448199	Cable Assy. - Operator Display	1
5	00-447023	Cable Assy. - 24 VDC Power	1
6	00-448198	Cable Assy. - Touchscreen	1
7	00-447544	Cable Assy. - USB (Host)	1
8	00-444769	Cable Assy. - DC Power	1
9	00-444846	Cable Assy. - Printhead Data	1
10	00-447032	Cable Assy. (Customer Display)	1

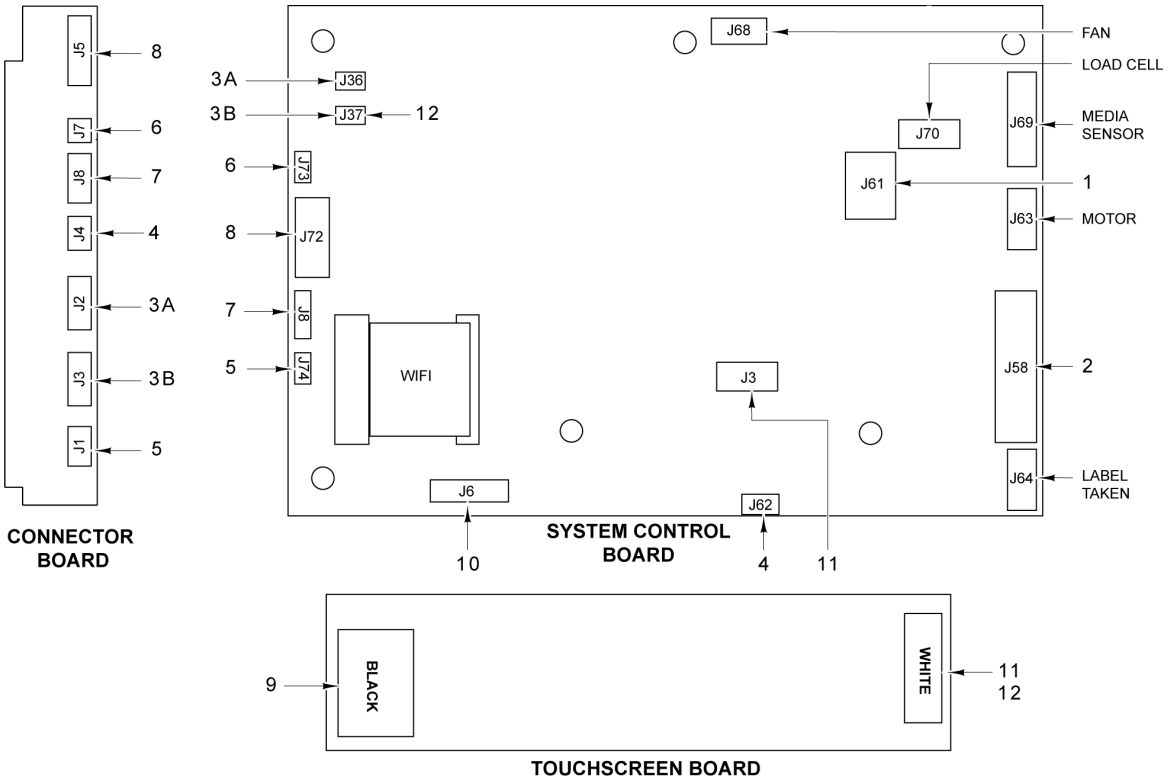

ITEM	CABLE PN	CONNECTOR BOARD CONNECTOR	SYS CNTR BOARD CONNECTOR	TOUCH SCREEN BOARD CONNECTOR	FUNCTION (COMPONENT)
1	00-444769	NA	J61	NA	DC POWER (CABLE)
2	00-444846	NA	J58	NA	PRINTHEAD DATA (CABLE)
3A	00-447024	J2	J36	NA	USB (CABLE) (Before S/N 451198632)
3B		J3	J37	NA	USB (CABLE)
4	00-447025	J4	J62	NA	SERVICE SWITCH (CABLE)
5	00-447026	J1	J74	NA	REBOOT / SHUTDOWN SWITCH (CABLE)
6	00-447028	J7	J73	NA	ETHERNET - LED (CABLE)
7	00-447029	J8	J8	NA	AUDIO (CABLE)
8	00-447524	J5	J72	NA	ETHERNET - DATA (CABLE)
9	00-448198	NA	NA	BLACK	TOUCHSCREEN (CABLE)
10	00-448199	NA	J6	NA	OPERATOR DISPLAY (CABLE)
11	00-449483	NA	J3	WHITE	TOUCHSCREEN (CABLE) (Before S/N 451198632)
12	00-449484	NA	J36	WHITE	TOUCHSCREEN (CABLE) (Starting S/N 451198632)

PL-65180

CABLES - CONNECTOR BOARD (ARA SYSTEM CONTROL BOARD)

CABLES - CONNECTOR BOARD (ARA SYSTEM CONTROL BOARD)

ILLUS. PL-65180	PART NO.	NAME OF PART	AMT.
1	00-444769	Cable Assy. - DC Power	1
2	00-444846	Cable Assy. - Printhead Data	1
3	00-447024	Cable Assy. - USB	2
4	00-447025	Cable Assy. - Service	1
5	00-447026	Cable Assy. - Reboot / Shutdown	1
6	00-447028	Cable Assy. - Ethernet LED	1
7	00-447029	Cable Assy. - Audio	1
8	00-447524	Cable Assy. - Ethernet Data	1
9	00-448198	Cable Assy. - Touchscreen	1
10	00-448199	Cable Assy. - Operator Display	1
11	00-449483	Cable Assy. - USB Touchscreen (Before S/N 451198632)	1
12	00-449864	Cable Assy. USB to Touchscreen Brd. (Starting S/N 451198632)	1

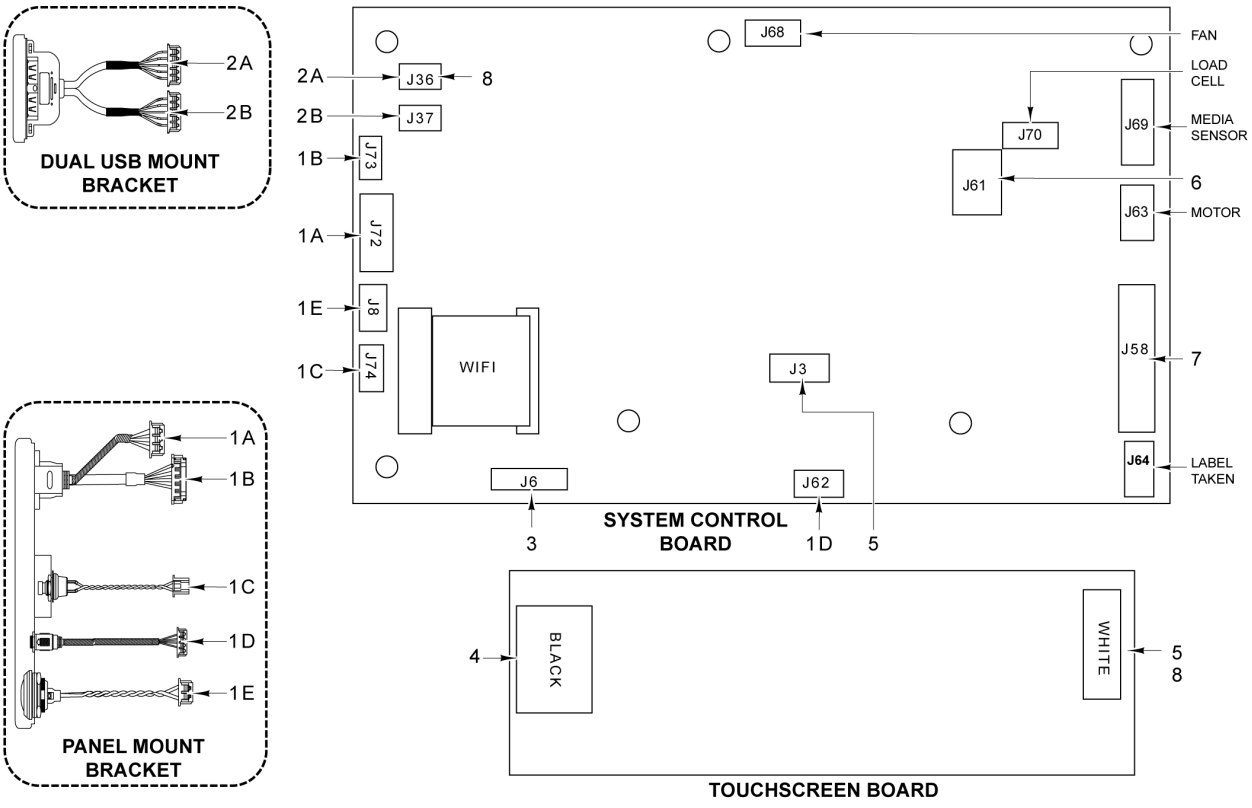

ITEM	CABLE PN	SYS CNTR BOARD CONNECTOR	TOUCH SCREEN BOARD CONNECTOR	FUNCTION (COMPONENT)
1A	00-448030	J72	NA	ETHERNET - DATA (PANEL BRACKET MOUNT CABLE)
1B		J73		ETHERNET - LED (PANEL BRACKET MOUNT CABLE)
1C		J73		SERVICE SWITCH (PANEL MOUNT BRACKET CABLE)
1D		J8		AUDIO (PANEL MOUNT BRACKET)
1E		J74		REBOOT / SHUTDOWN SWITCH (PANEL MOUNT BRACKET CABLE)
2A	00-448056	J36	NA	USB (DUAL USB MOUNTING BRACKET) (Before S/N 451198632)
2B		J37		USB (DUAL USB MOUNTING BRACKET)
3	00-448199	J6	NA	OPERATOR DISPLAY (CABLE)
4	00-448198	NA	BLACK	TOUCHSCREEN (CABLE)
5	00-449483	J3	WHITE	TOUCHSCREEN (CABLE) (Before S/N 451198632)
6	00-444769	J61	NA	DC POWER (CABLE)
7	00-444846	J58	NA	PRINTHEAD DATA (CABLE)
8	00-449864	J36	NA	TOUCHSCREEN (CABLE) (Starting S/N 451198632)

PL-65181

CABLES - PANEL MOUNT (ARA SYSTEM CONTROL BOARD)

CABLES - PANEL MOUNT
(ARA SYSTEM CONTROL BOARD)

ILLUS. PL-65181	PART NO.	NAME OF PART	AMT.
1	00-448030	Bracket Assy. (Panel Mount)	1
2	00-448056	Bracket Assy. (USB Panel Mount)	1
3	00-448199	Cable Assy. - Operator Display	1
4	00-448198	Cable Assy. - Touchscreen	1
5	00-449483	Cable Assy. - USB Touchscreen (Before S/N 451198632)	1
6	00-444769	Cable Assy. - DC Power	1
7	00-444846	Cable Assy. - Printhead Data	1
8	00-449864	Cable Assy. USB to Touchscreen Brd. (Starting S/N 451198632)	1

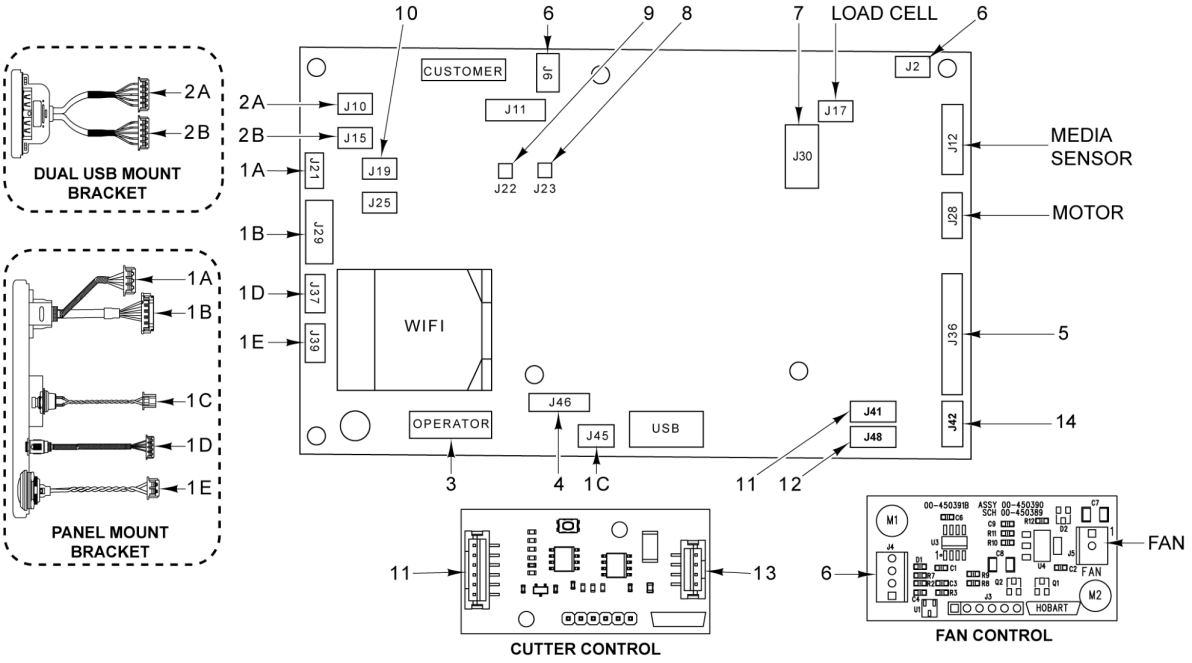

ITEM	CABLE PN	CONNECTOR	FUNCTION (COMPONENT)
1A	00-448030	J21	ETHERNET - DATA (PANEL BRACKET MOUNT CABLE)
1B		J29	ETHERNET - LED (PANEL BRACKET MOUNT CABLE)
1C		J45	SERVICE SWITCH (PANEL MOUNT BRACKET CABLE)
1D		J37	AUDIO (PANEL MOUNT BRACKET CABLE)
1E		J39	REBOOT / SHUTDOWN SWITCH (PANEL MOUNT BRACKET CABLE)
2A	00-448056	J10	USB (DUAL USB MOUNTING BRACKET)
2B		J15	USB (DUAL USB MOUNTING BRACKET)
3	00-448199	OPERATOR	OPERATOR DISPLAY (CABLE) (SS DISPLAY)
4	00-448198	J46	TOUCHSCREEN (CABLE) (SS DISPLAY)
5	00-444846	J36	PRINTHEAD DATA (CABLE)
6	00-450405	J2/J6	FAN CONTROL CABLE ASSY.
7	00-444769	J30	DC POWER (CABLE)
8	00-447030	J23	SPEAKER ASSY. (RT CHANNEL)
9	00-447030	J22	SPEAKER ASSY. (LT CHANNEL)
10	00-449884	J19	CABLE ASSY. MOLEX TO MICRO USB (ML-29448 ONLY)
11	00-450312	J41/J2 (Cut Brd.)	CUTTER CONTROL CABLE ASSEMBLY
12	00-450313	J48	CUTTER INTERLOCK
13	00-450314	J1 (Cut Brd.)	CUTTER CABLE ASSY.
14	00-450039	J42	CUTTER ASSY. (LABEL TAKEN SENSOR CABLE ADAPTER)

PL-61606

CABLES - PANEL MOUNT (ARK SYSTEM CONTROL BOARD)

CABLES - PANEL MOUNT
(ARK SYSTEM CONTROL BOARD)

ILLUS. PL-61606	PART NO.	NAME OF PART	AMT.
1	00-448030	Bracket Assy. (Panel Mount)	1
2	00-448056	Bracket Assy. (USB Panel Mount)	1
3	00-448199	Cable Assy. - LVDS (Operator Display) (SS Display)	1
4	00-448198	Cable Assy. - Touchscreen (SS Display)	1
5	00-444846	Cable Assy. - Printhead	1
6	00-450405	Cable Assy. - Fan Control	1
7	00-444769	Cable Assy. - DC Power	1
8	00-447030	Speaker Assy. (RT Channel)	1
9	00-447030	Speaker Assy. (LT Channel)	1
10	00-449884	Cable Assy. (USB Scanner) (ML-29448)	1
11	00-450312	Cable Assy. (Cutter Control)	1
12	00-450313	Sensor Assy. - Cutter Interlock	1
13	00-450314	Cable Assy. (Cutter)	1
14	00-450039	Cable Assy. (LTS Adapter)	1