HOBART
SERVICE

CATALOG OF REPLACEMENT PARTS



HTs SERIES SCALES

ML-29359
ML-29360
ML-29361
ML-29362
ML-29363
ML-29364
ML-29365
ML-29366

A Product of Hobart Service
701 S. Ridge Ave Troy, OH 45374

FORM F43300 Rev. K (April 2026)

 © HOBART SERVICE 2026

Table of Contents

4	OPERATOR CONSOLE
6	CUSTOMER DISPLAY
8	WEIGHER COMPONENTS
10	MAIN CIRCUIT COMPONENTS (SYSTEM CONTROL / PERIPHERAL PCB)
12	MAIN CIRCUIT COMPONENTS (ARA SYSTEM CONTROL PCB)
14	POWER SUPPLY
16	PRINTER
20	CASSETTE (WIDE LABEL)
22	CASSETTE (NARROW LABEL)
24	PRINTER ONLY (ML-29360 & ML-29364)
26	ELEVATED DISPLAY (7 IN.)
28	CABLES - CONNECTOR BOARD (SYSTEM CONTROL / PERIPHERAL BOARD)
30	CABLES - PANEL MOUNT (SYSTEM CONTROL / PERIPHERAL BOARD)
32	CABLES - CONNECTOR BOARD (ARA SYSTEM CONTROL BOARD)
34	CABLES - PANEL MOUNT (ARA SYSTEM CONTROL BOARD)
36	SCALE UNIT (USED WITH TWO-PIECE SCALE/PRINTER)

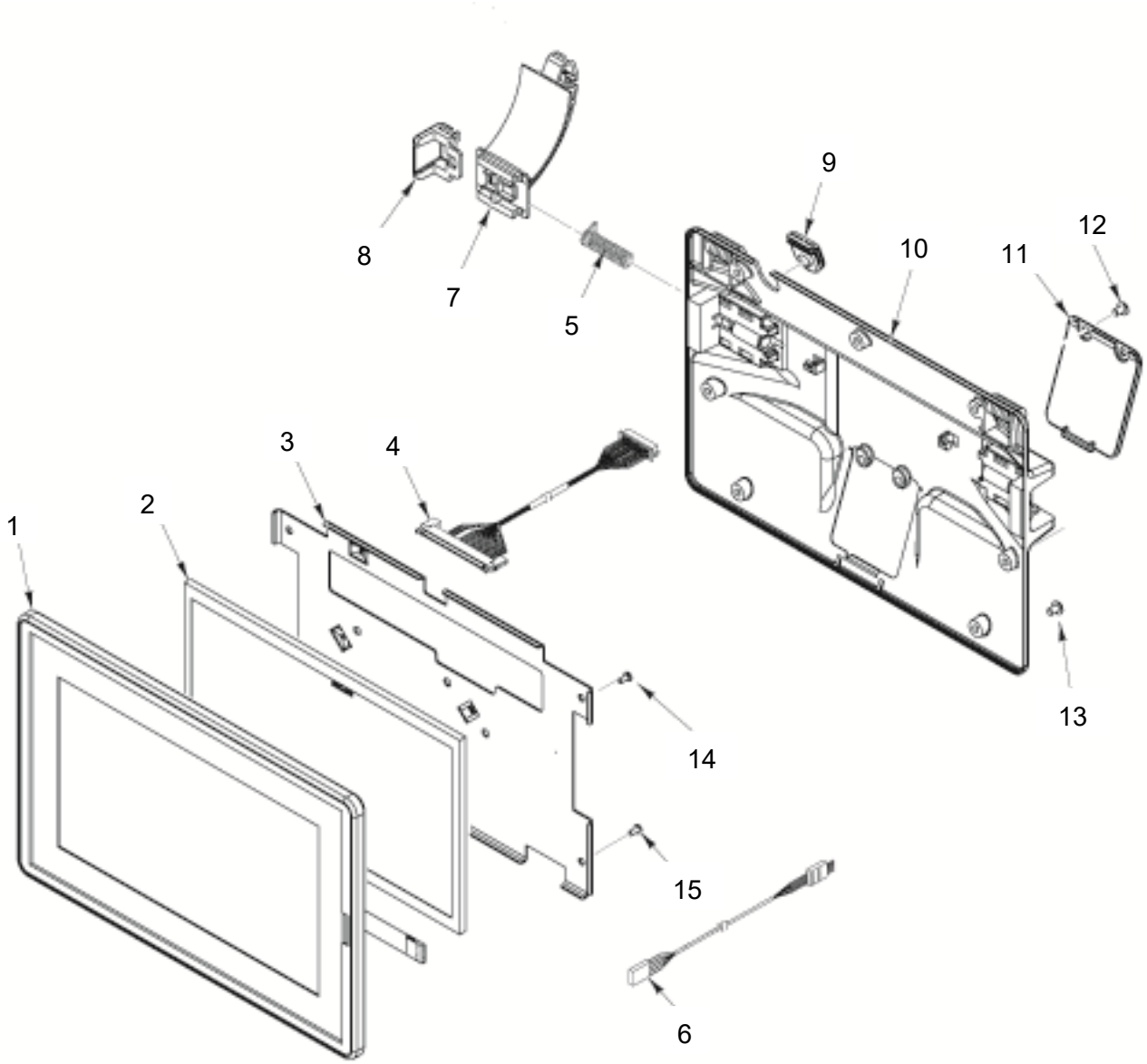

16	00-255502	Tie - Cable
17	00-913108	Stylus

PARTS NOT ILLUSTRATED

PL-60270

OPERATOR CONSOLE

OPERATOR CONSOLE

ILLUS.	PART NO.	NAME OF PART	AMT.
PL-22201			
1	00-447080	Touchscreen Housing Assembly	1
2	00-447157	Display (10.1 In.) (TFT) (WVGA LED)	1
3	00-447813	Bracket Assy. - Display Mounting	1
4	00-447095	Cable Assy. (Operator Display LVDS)	1
5	00-449993	Spring - Latch Return	2
6	00-447167	Cable Assy. (Touchscreen)	1
7	00-447039	Arm - Console Latch	2
8	00-447040	Button - Console Latch	2
9	00-447038	Grommet	1
10	00-447018	Housing - Console Rear (Black)	1
11	00-447076	Plate - Scanner Cover (Black)	1
12	SC-018-30	Mach. Screw 8-32 x 1/4 Phil. Pan Hd.	2
13	SC-018-30	Mach. Screw 8-32 x 1/4 Phil. Pan Hd.	7
14	SC-018-28	Mach. Screw 6-32 x 1/4 Phil. Pan Hd.	2
15	SC-018-28	Mach. Screw 6-32 x 1/4 Phil. Pan Hd.	4
16	00-255502	Tie - Cable Locking	0
17	00-913108	Stylus (With Hobart Service Logo)	1

WITH CUSTOMER DISPLAY
(ML-29361 & ML-29365)

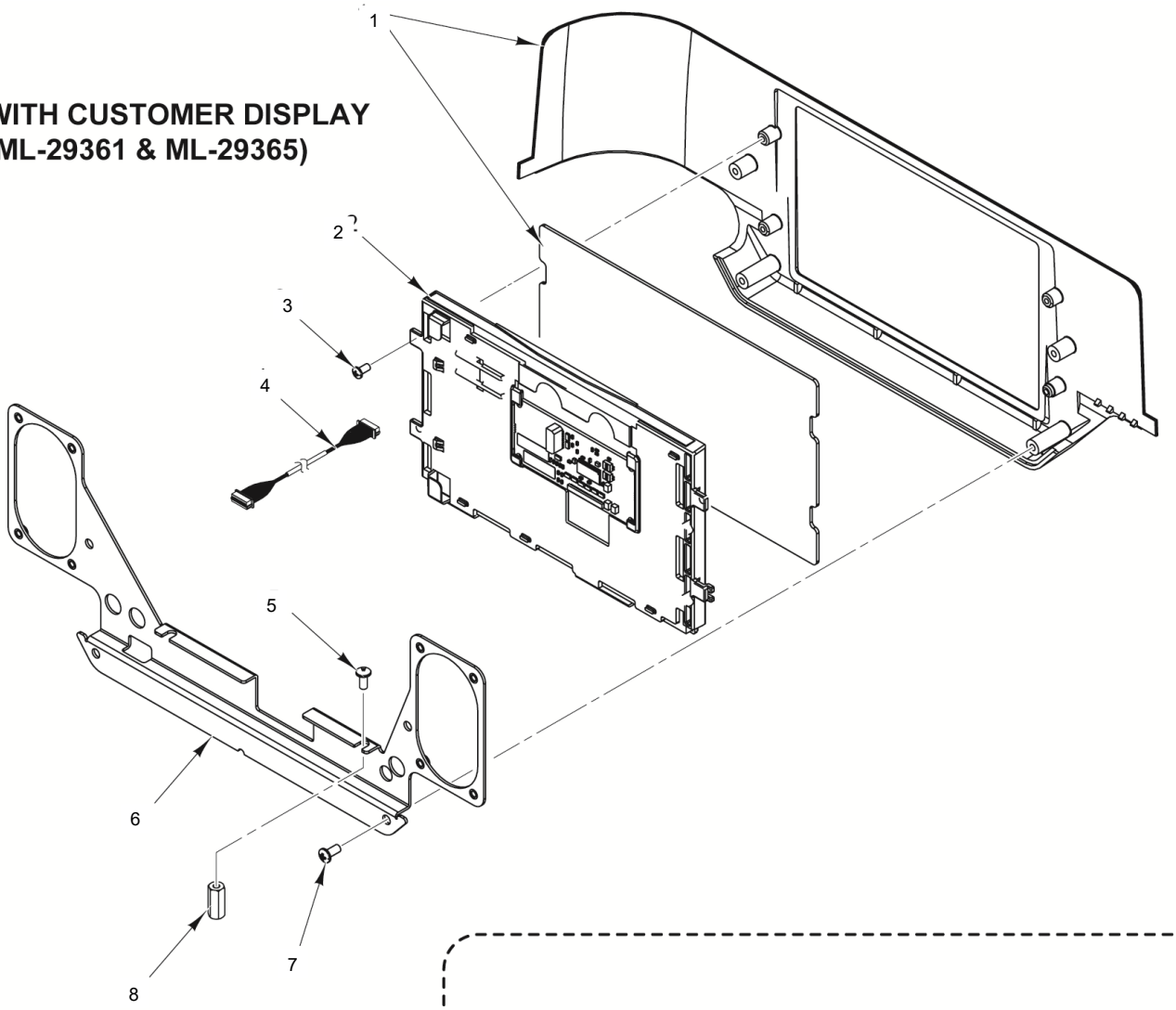

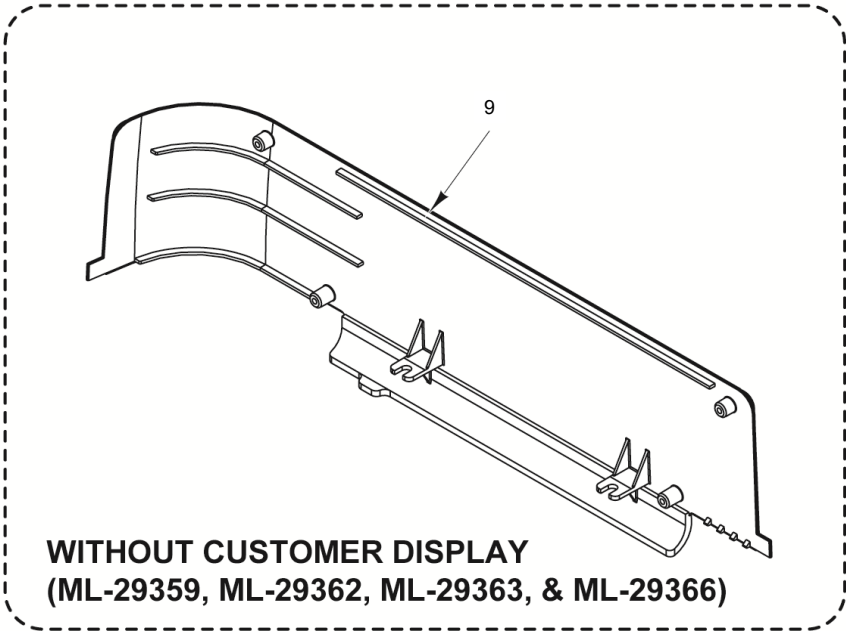

WITHOUT CUSTOMER DISPLAY
(ML-29359, ML-29362, ML-29363, & ML-29366)

PL-60498

CUSTOMER DISPLAY

CUSTOMER DISPLAY

ILLUS.	PART NO.	NAME OF PART	AMT.
PL-24546			
1	00-449178	Housing Assy, Customer Display	1
2	00-447081	Display Assy. (7 In.)	1
3	SD-033-14	Self-Tapping Screw 4-20 x 1/4 Phil. Pan Hd. Plastite	4
4	00-447032	Cable Assy. (Customer Display) (LVDS)	1
5	SA-021-52	Mach. Screw Assy. 8-32 x 7/8 Phil. Pan Hd.	2
6	00-447063	Bracket - Speaker Mounting	1
7	SD-037-71	Self-Tapping Screw 6-19 x 5/16 Phil. Pan Hd., (Plastite)	4
8	00-446929	Spacer - Mounting (GCD)	2
9	00-447052	Panel - Housing Filler (Without Customer Display)	1

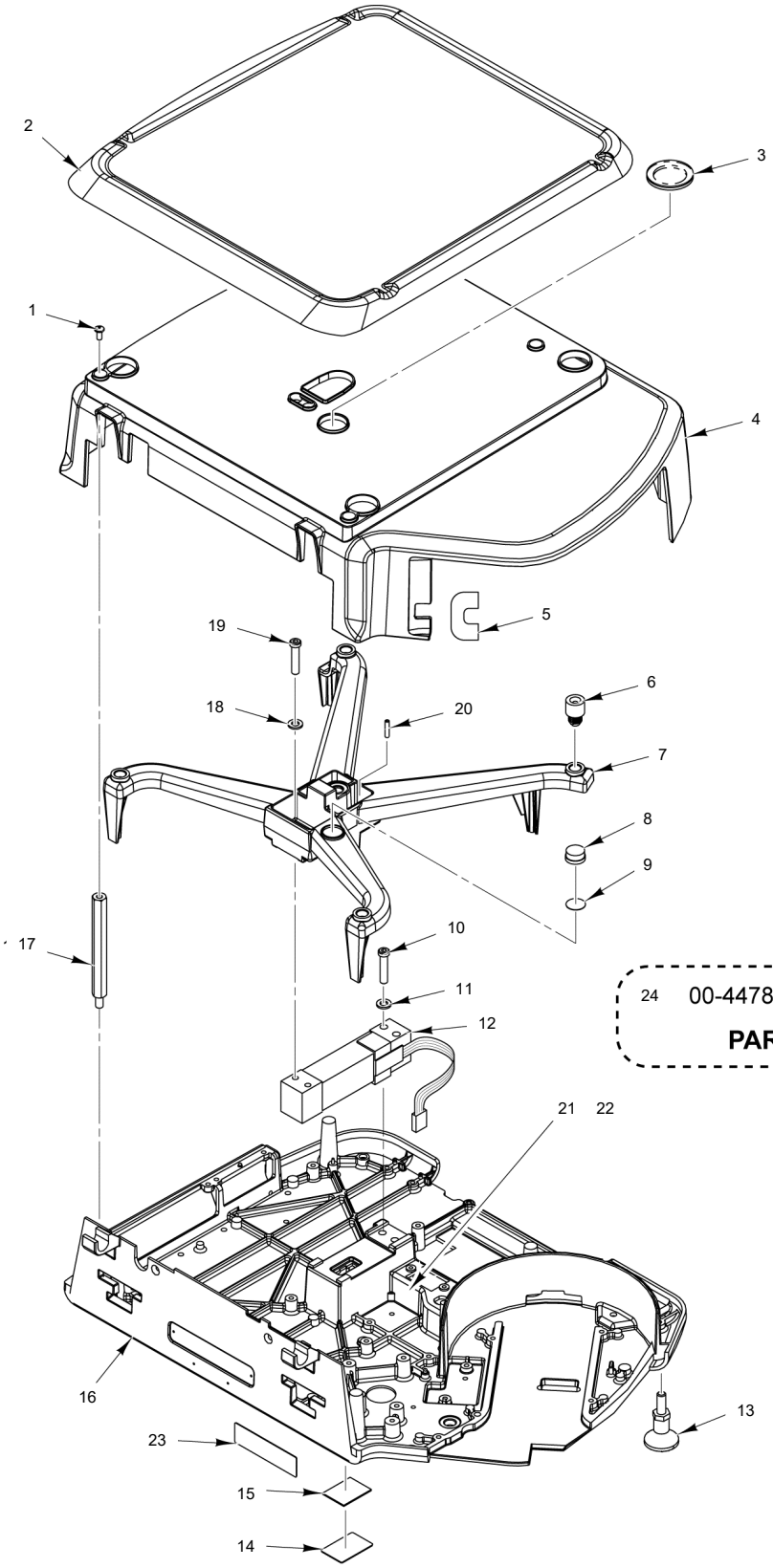

24 00-447831 Label - Cable Identification

PART NOT ILLUSTRATED

PL-60509

WEIGHER COMPONENTS

WEIGHER COMPONENTS

ILLUS.	PART NO.	NAME OF PART	AMT.
PL-24636			
1	SC-129-33	Mach. Screw 8-32 x 3/8 Phil. Pan Hd.	4
2	00-447083	Platter Assy.	1
3	00-441243	Cover - Level Bubble (Incls. Foam Gasket)	1
4	00-447050	Housing - Main (Black)	1
5	00-447058	Shield - Infrared	1
6	00-043319	Mount - Platter	5
7	00-043302	Platter - Sub	1
8	00-043112	Level - Spirit	1
9	00-043257	Tape - Level	1
10	SC-120-70	Cap Screw 1/4-20 x 1-5/8 Hex Socket Hd.	2
11	WL-008-17	Lockwasher 1/4 Internal	2
12	00-443075	Load Cell - Multiple Range (15 kg)	1
13	00-447055	Foot Assy.	4
14	00-043389	Plate - Remote Weigher	1
15	00-043256	Tape	1
16	00-444750-00005	Base - Main	1
17	00-043318	Standoff (Housing Mount)	4
18	WL-008-17	Lockwasher 1/4 Internal	2
19	SC-120-70	Cap Screw 1/4-20 x 1-5/8 Hex Socket Hd.	2
20	00-043286	Screw - Overload (Stop)	2
21	00-043256	Tape	1
22	00-043390	Plate - SM Port	1
23	00-184336	Label - Interference Warning	1
24	00-447831	Label - Cable Identification	1

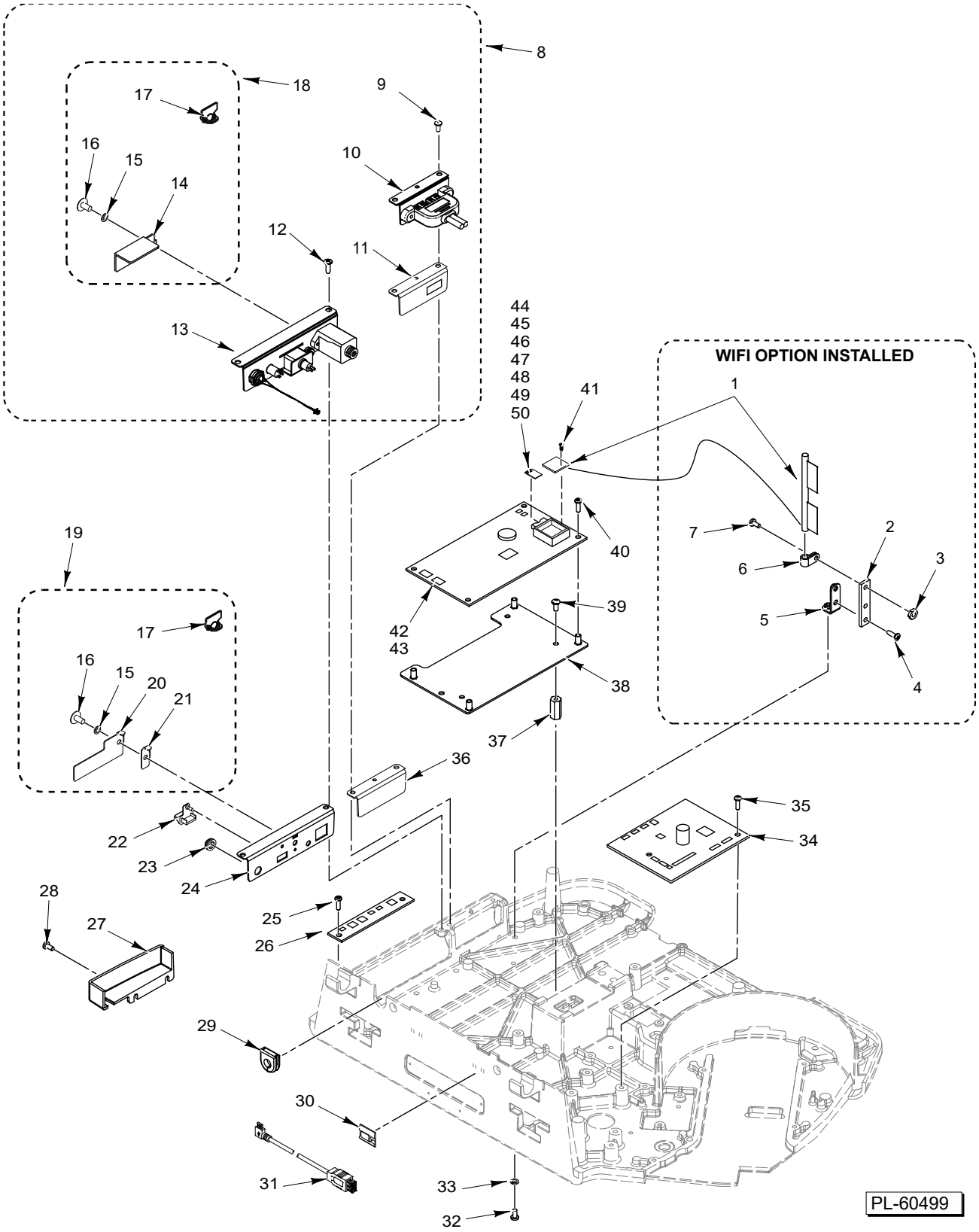

MAIN CIRCUIT COMPONENTS
(SYSTEM CONTROL / PERIPHERAL PCB)

MAIN CIRCUIT COMPONENTS
(SYSTEM CONTROL / PERIPHERAL PCB)

ILLUS.	PART NO.	NAME OF PART	AMT.
PL-24547			
*1	00-449162	Kit - WiFi Module and Antenna (Must replace as set)	1
*2	00-447086	Isolator - Antenna	1
*3	NS-031-07	Stop Nut 8-32 Hex	1
*4	SC-129-33	Mach. Screw 8-32 x 3/8 Phil. Pan Hd.	2
*5	00-447087	Bracket - Antenna	1
*6	00-447108	Clamp P	1
*7	SD-015-40	Self-Tapping Screw 8-32 x 3/8 Phil. Pan Hd., Type TT	1
8	00-448274	Kit - Service (Panel Mount) (Incls Items 10, 11, 13, & 18)	1
9	SD-015-40	Self-Tapping Screw 8-32 x 3/8 Phil. Pan Hd., Type TT	2
**10	00-448056	Bracket Assy. (USB Panel Mount) Bracket - Cable Assy. (Dual USB Panel)	1
**11	00-448039	Bracket - USB Mounting (Single)	1
12	SD-015-40	Self-Tapping Screw 8-32 x 3/8 Phil. Pan Hd., Type TT	2
**13	00-448030	Bracket Assy. (Panel Mount)	1
**14		Plate - Security (Part of Item 18)	1
15	WL-003-12	Lockwasher #8 Helical	1
16	00-183906	Screw (Special Fil. Hd.)	1
17	00-444424	Seal - Wire Roto (8 In.)	1
**18	00-448245	Kit - Security (Incls Items 14 thru 17)	1
***19	00-447089	Kit - Security (Incls. Items 15 thru 17, 20, & 21)	1
***20	00-447067	Plate - USB Cover	1
***21	00-447088	Plate - Security	1
***22	00-443581	Plug - USB Type A	1
***23	00-443606	Seal - Power / Reset Button	1
***24	00-447803	Bracket - Connector Board	1
***25	SC-129-33	Mach. Screw 8-32 x 3/8 Phil. Pan Hd.	2
***26	00-447720	Board - Connector (Black)	1
27	00-447059	Cover - Network	1
28	SD-039-75	Self-Tapping Screw 8-32 x 3/8, Type TT (Black)	3
29	00-447046	Grommet	1
30	00-447818	Clip - Cable	2
31	00-447785	Cable Assy. - USB (Service) (USB Service)	1
32	SD-015-40	Self-Tapping Screw 8-32 x 3/8 Phil. Pan Hd., Type TT	0
33	WL-008-07	Lockwasher #8 Internal Shakeproof	0
34	00-447780	Board - Peripheral Control (Black)	1
35	SC-129-33	Mach. Screw 8-32 x 3/8 Phil. Pan Hd.	2
36	00-447069	Bracket - GCB Blank	1
37	00-447802	Standoff	4
38	00-447012	Bracket Assy. - Main Board	1
39	SC-129-33	Mach. Screw 8-32 x 3/8 Phil. Pan Hd.	4
40	SC-112-42	Mach. Screw 6-32 x 1/2 Phil. Pan Hd.	5
41	SC-132-06	Screw - Mach M2 X 0.4 X 4MM	2
42	00-447777	Board - System Control (HTs) (iMX6-Solo) (Blue)	1
43	00-449459	Board - System Control (HTs) (iMX6-Solo) (Blue) (Use only in scales where application V3.0 or higher is currently installed)	1
44	00-447164-00014	Micro SD (Programmed) (8GB) (Version 1.12.0)	1
45	00-447907-00008	Micro SD (Programmed) (16GB) (Version 2.3.0)	1
46	00-448959-00002	Micro SD (Programmed) (16GB) (Version 2.5.0)	1
47	00-449454-00006	Micro SD (Programmed) (16GB) (Version 3.2.0) (Use only in scales where application V3.0 or higher is currently installed)	1
48	00-450134-00004	Micro SD (Programmed) (16GB) (Version 4.1.300)	1
49	45-000602-00003	Micro SD (Programmed) (16GB) (Version 4.2.0)	1
50	45-000057-00002	Micro SD (Programmed) (16GB) (Version 3.3.680) (Use only in scales where application V3.0 or higher is currently installed)	1

* Optional - ML-29363, ML-29364, ML-29365, ML-29366
** Starting SN 451127618

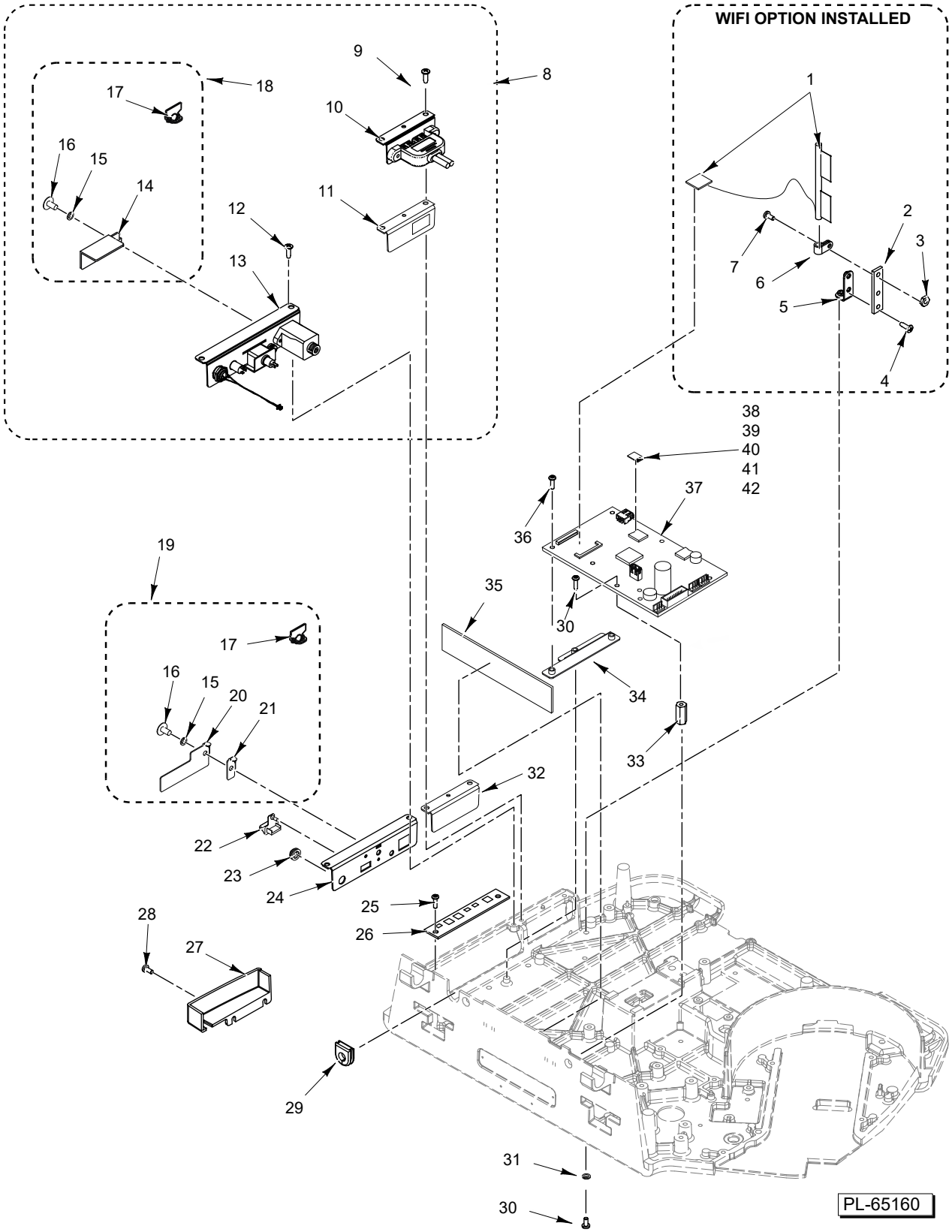

MAIN CIRCUIT COMPONENTS
(ARA SYSTEM CONTROL PCB)

MAIN CIRCUIT COMPONENTS
(ARA SYSTEM CONTROL PCB)

ILLUS.	PART NO.	NAME OF PART	AMT.
PL-30323			
*1	00-449711	Kit - Wifi Module & Antenna Kit - WiFi Module and Antenna (Must replace as set)	1
*2	00-447086	Isolator - Antenna	1
*3	NS-031-07	Stop Nut 8-32 Hex	1
*4	SC-129-33	Mach. Screw 8-32 x 3/8 Phil. Pan Hd.	2
*5	00-447087	Bracket - Antenna	1
*6	00-447108	Clamp P	1
*7	SD-015-40	Self-Tapping Screw 8-32 x 3/8 Phil. Pan Hd., Type TT	1
8	00-448274	Kit - Service (Panel Mount) (Incls Items 10, 11, 13, & 18))	1
**9	SD-015-40	Self-Tapping Screw 8-32 x 3/8 Phil. Pan Hd., Type TT	2
**10	00-448056	Bracket - Cable Assy. (Dual USB Panel)	1
**11	00-448039	Bracket - USB Mounting (Single)	1
**12	SD-015-40	Self-Tapping Screw 8-32 x 3/8 Phil. Pan Hd., Type TT	2
**13	00-448030	Bracket Assy. (Panel Mount)	1
**14		Plate - Security (Part of Item 18)	1
15	WL-003-12	Lockwasher #8 Helical	1
16	00-183906	Screw (Special Fil. Hd.)	1
17	00-444424	Seal - Wire Roto (8 In.)	1
**18	00-448245	Kit - Security (Incls Items 14 thru 17)	1
***19	00-447089	Kit - Security (Incls Items 15 thru 17, 20, & 21)	1
***20	00-447067	Plate - USB Cover	1
***21	00-447088	Plate - Security	1
***22	00-443581	Plug - USB Type A	1
***23	00-443606	Seal - Power / Reset Button	1
***24	00-447803	Bracket - Connector Board	1
***25	SC-129-33	Mach. Screw 8-32 x 3/8 Phil. Pan Hd.	2
***26	00-447720	Board - Connector (Black)	1
27	00-447059	Cover - Network	1
28	SD-039-75	Self-Tapping Screw 8-32 x 3/8, Type TT (Black)	3
29	00-447046	Grommet	1
30	SD-015-40	Self-Tapping Screw 8-32 x 3/8 Phil. Pan Hd., Type TT	0
31	WL-008-07	Lockwasher #8 Internal Shakeproof	0
***32	00-447069	Bracket - GCB Blank	1
****33	00-447802	Standoff	2
****34	00-448321	Bracket - ARA Board	1
35	00-449512	Board - Touchscreen Control	1
****36	SC-018-30	Mach. Screw 8-32 x 1/4 Phil. Pan Hd.	2
37	00-448410	Board - System Control (ARA - Solo)	1
38	00-449454-00014	Micro SD (Programmed) (16GB) (Version 3.3.200)	1
39	00-450134-00001	Micro SD, Programed, HT SERIES/ PREPACK 4.0.0	1
40	00-450134-00004	Micro SD (Programmed) (16GB) (Version 4.1.300)	1
41	45-000602-00003	Micro SD (Programmed) (16GB) (Version 4.2.0)	1
42	45-000057-00002	Micro SD (Programmed) (16GB) (Version 3.3.680) (Use only in scales where application V3.0 or higher is currently installed)	1

*** Before SN 451127618
* Optional - ML-29363, ML-29364, ML-29365, ML-29366

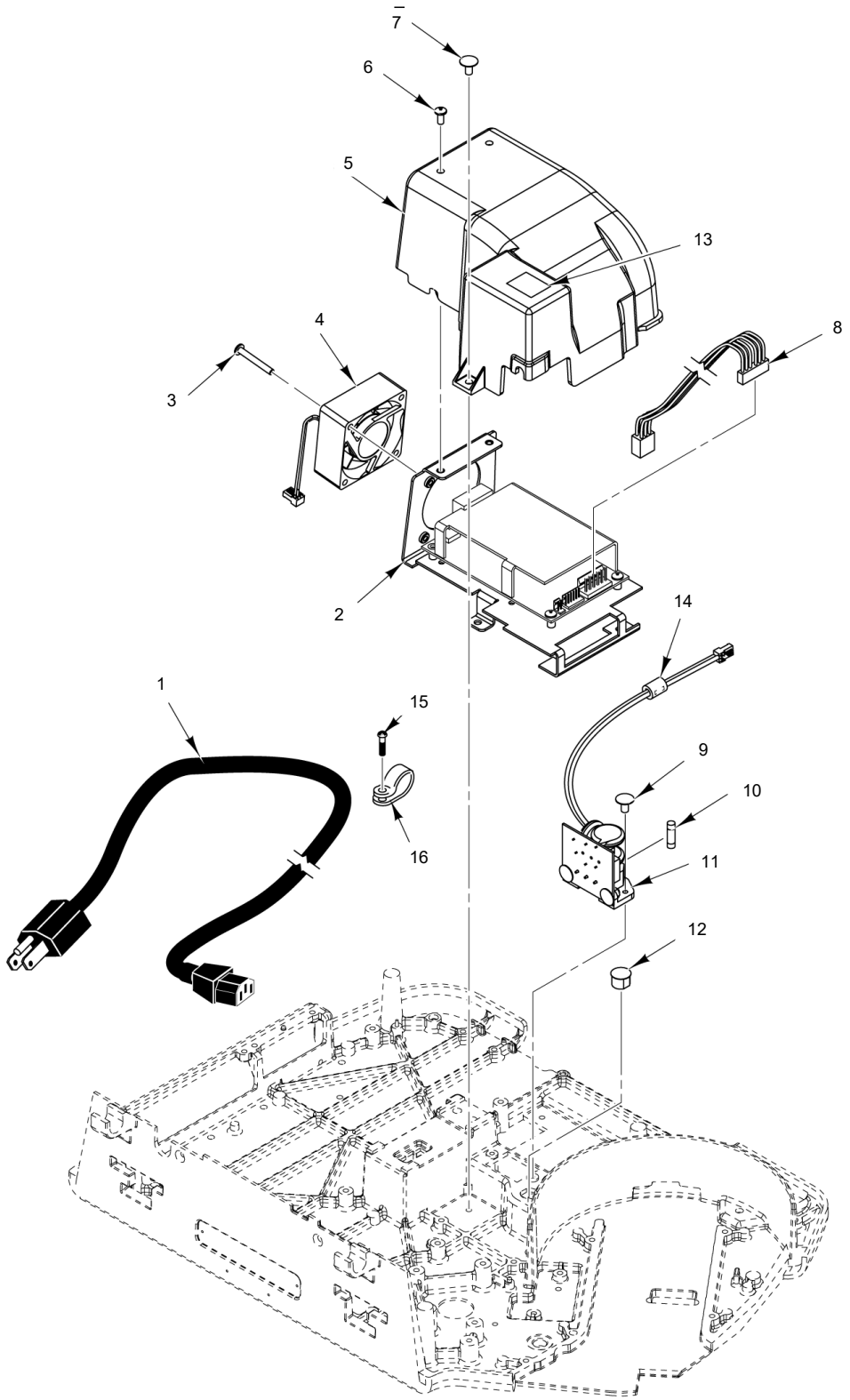

PL-60272

POWER SUPPLY

POWER SUPPLY

ILLUS.	PART NO.	NAME OF PART	AMT.
PL-22209			
1	00-044479	Cord - Power (120 V.)	1
2	00-444870-00002	Power Supply & Baffle Assy.	1
3	SA-021-55	Mach Screw Assy 8-32 v 3/8 Cap Hd.	2
4	00-444906	Fan Assy.	1
5	00-444799	Shroud - Power Supply	1
6	SC-129-33	Mach. Screw 8-32 x 3/8 Phil. Pan Hd.	2
7	SD-015-40	Self-Tapping Screw 8-32 x 3/8 Phil. Pan Hd., Type TT	1
8	00-444769	Cable Assy. - DC Power	1
9	SD-015-38	Self-Tapping Screw 6-32 x 3/8 Phil. Pan Hd., Type TT	2
10	FE-025-32	Fuse (250 V., 3.0 Amp.) (SLO) (Power Input Board)	1
11	00-448290	Board - Power Input (Incls. Item 10)	1
12	PB-005-28	Plug - Button (1/2 In.)	1
13	00-047052	Label - Fuse	1
14	00-447094	Ferrite (Clamp-On)	1
15	SD-015-41	Self-Tapping Screw 8-32 x 1/2 Phil. Pan Hd., Type TT	1
16	00-447108	Clamp P	1

** Starting SN 451127618
*** Before SN 451127618

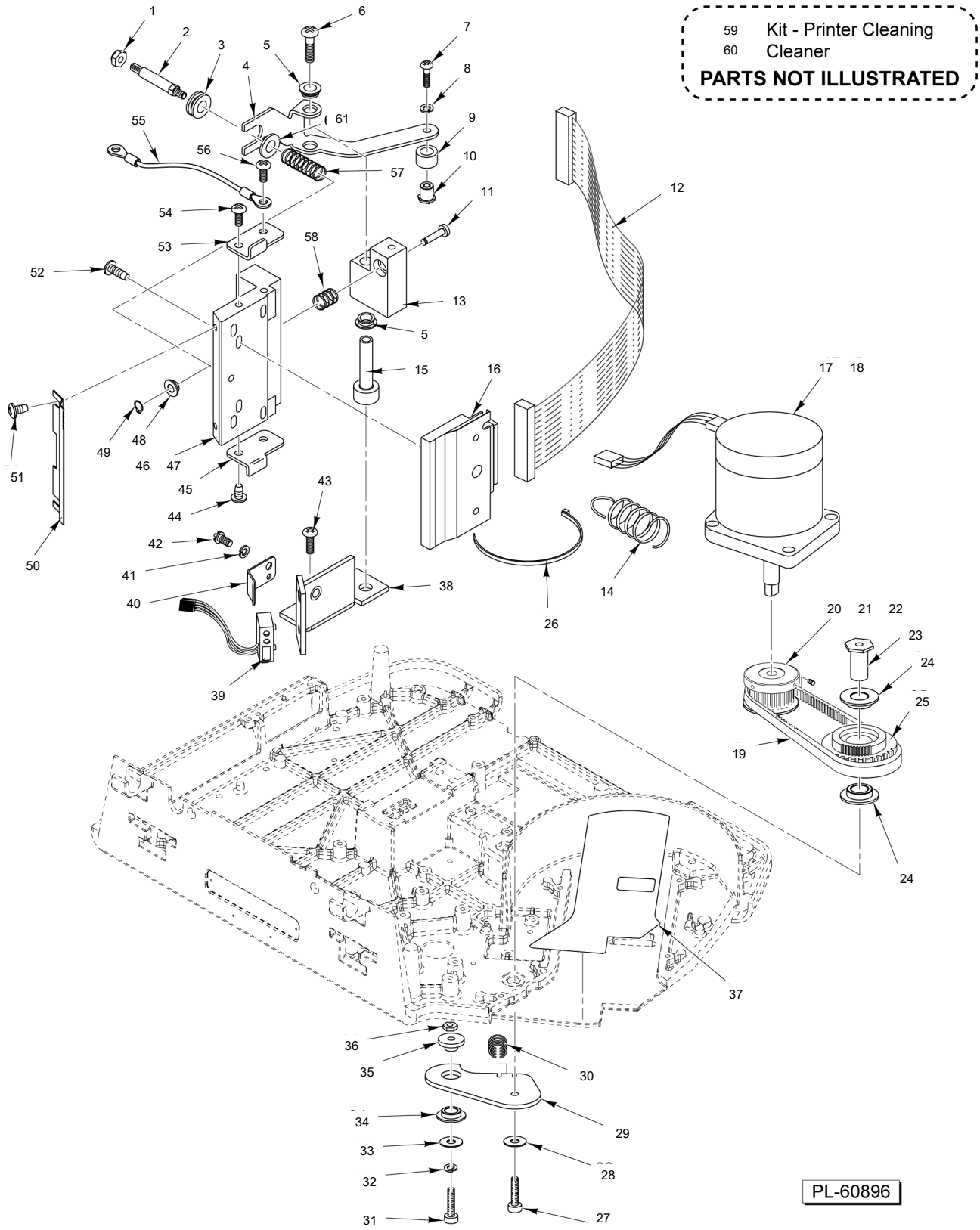
59 Kit - Printer Cleaning
60 Cleaner
PARTS NOT ILLUSTRATED
PL-60896

PRINTER

PRINTER

ILLUS. PL-26611	PART NO.	NAME OF PART	AMT.
1	NS-031-49	Stop Nut 10-32 Hex (SST)	1
2	00-043267	Stud - Adjusting	1
3	00-043382	Bushing - Stud	1
4	00-043299	Bracket - Spring Pivot	1
5	00-043253	Bushing - Nyliner	2
6	SD-038-05	Self-Tapping Screw 8-32 x 1-3/4 Phil. Pan Hd., Type TT	1
7	SC-018-31	Mach. Screw 8-32 x 3/8 Phil. Pan Hd.	1
8	WL-008-07	Lockwasher #8 Internal Shakeproof	1
9	00-043385	Roller - Pivot Arm	1
10	00-043386	Retainer - Roller	1
11	00-047424	Shaft - Printhead Pivot	1
12	00-444846	Cable Assy. - Printhead	1
13	00-047423	Pivot Block - Printhead	1
14	00-043387	Spring - Extension	1
15	00-047441	Sleeve - Pivot	1
16	00-448003	Printhead - Thermal (Kyocera)	1
17	00-440142-00002	Motor Assy. - Stepper	1
18	SD-015-40	Self-Tapping Screw 8-32 x 3/8 Phil. Pan Hd., Type TT	3
19	00-442823	Belt - Timing	1
20	00-442822	Pulley - Take-Up Motor.	1
21	SC-047-74	Set Screw 8-32 x 1/4 Hex Hdls. Cup Pt.	2
22	00-512987	Adhesive (Loctite #222, Purple)	0
23	00-441758	Shaft - Pulley & Gear	1
24	00-043365	Bushing	2
25	00-043250	Pulley & Gear Assy. (Incls. Item 24)	1
26	00-255502	Tie - Cable Locking	1
27	SC-092-36	Cap Screw 6-32 x 1/2 Hex Socket Hd.	1
28	WL-008-02	Lockwasher #6 Internal Shakeproof	1
29	00-447373	Plate - Pivot (Incls. Item 34)	1
30	00-048374	Spring - Printhead Adjusting	1
31	SC-111-83	Cap Screw 6-32 x 3/4 Hex Socket Hd.	1
32	WL-008-02	Lockwasher #6 Internal Shakeproof	1
33	WS-019-41	Washer (SST)	1
34	00-043365	Bushing	1
35	00-441760	Bushing - Gear Adjusting	1
36	NS-031-03	Stop Nut 6-32 Hex	1
37	00-441701	Label - Anti-Friction	1
38	00-047442	Bracket - Label Taken Mtg.	1
39	00-449590	Sensor - Assy., Label Taken	1
40	00-043394	Bracket - Label Taken	1
41	WL-008-07	Lockwasher #8 Internal Shakeproof	1
42	SC-018-31	Mach. Screw 8-32 x 3/8 Phil. Pan Hd.	1
43	SD-015-40	Self-Tapping Screw 8-32 x 3/8 Phil. Pan Hd., Type TT	2
44	SD-015-37	Self-Tapping Screw 6-32 x 1/4 Phil. Pan Hd., Type TT	2
61	WS-019-10	Washer (SST)	1
45	00-047438	Stop - Printhead Lower	1
46	00-442996	Heat Sink and Bushing Assy. (Incls. Item 48)	1
47	00-519504	Thermo Joint Compound (2 Oz.)	0
48	00-043365	Bushing	2
49	RR-006-22	Retaining Ring 1/4 In. (SST)	1
50	00-032887	Tearbar	1
51	SD-015-37	Self-Tapping Screw 6-32 x 1/4 Phil. Pan Hd., Type TT	2
52	SA-021-46	Screw Assy. M3 x 0.5 x 12 mm Phil. Pan Hd.	2
53	00-047437	Stop - Printhead Upper	1
54	SD-015-37	Self-Tapping Screw 6-32 x 1/4 Phil. Pan Hd., Type TT	1
55	00-049396	Wire - Drain (Ground)	1
56	SD-015-37	Self-Tapping Screw 6-32 x 1/4 Phil. Pan Hd., Type TT	1
57	00-043333	Spring - Printhead	1

**** Reqd. for ARA PCB retrofit before SN 451184328

PRINTER

ILLUS. PL-26611	PART NO.	NAME OF PART	AMT.
58	00-048374	Spring - Printhead Adjusting	1
59	00-913096-00001	Kit - Thermal Printer Cleaning	1
60	00-558169	Cleaner (Electronics) (12 Oz. Can)	0
61	WS-019-10	Washer (SST)	1

NOTES

50 00-444875-00005 Cassette Assy.

PART NOT ILLUSTRATED

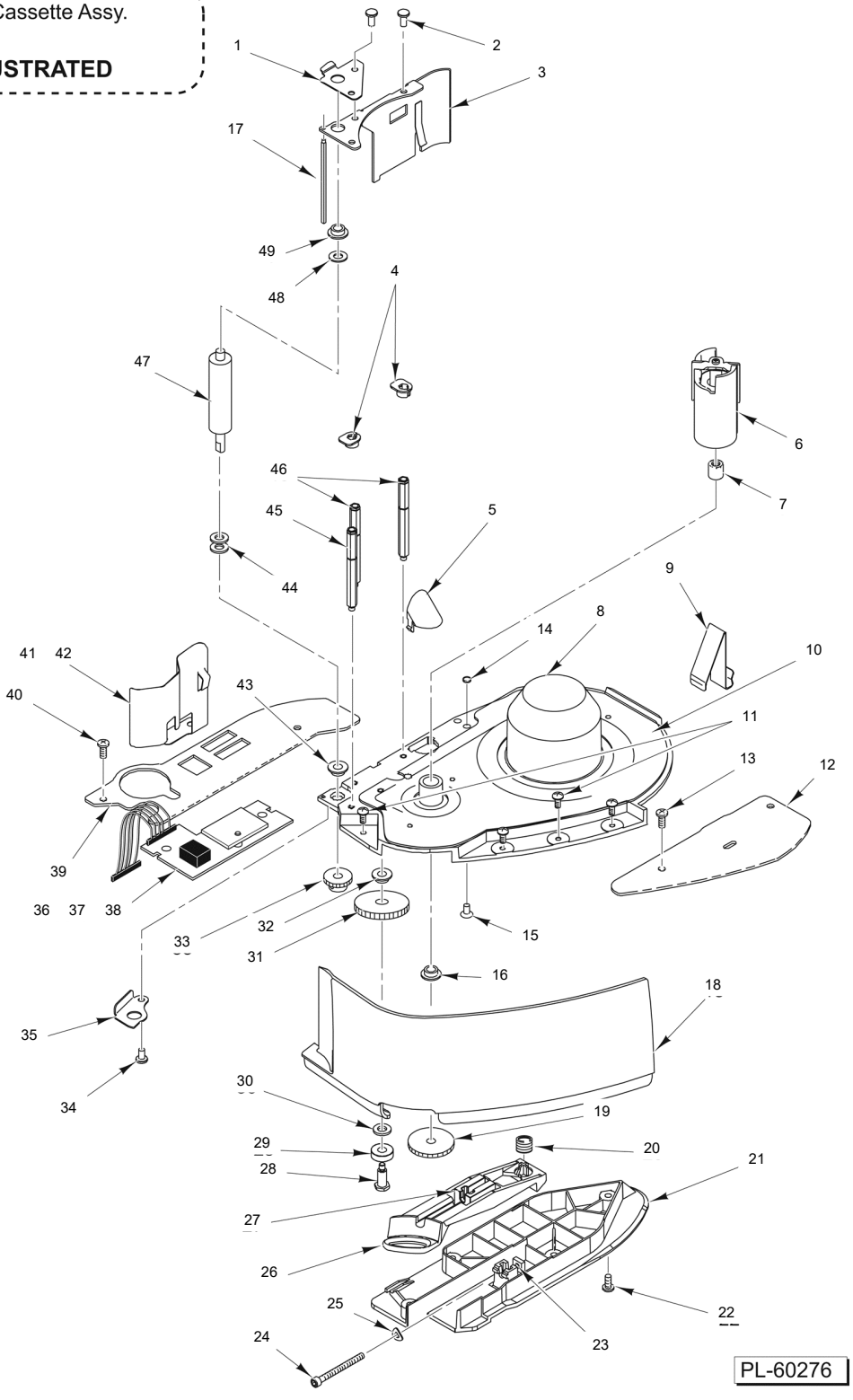

CASSETTE
(WIDE LABEL)

CASSETTE
(WIDE LABEL)

ILLUS.	PART NO.	NAME OF PART	AMT.
PL-22210			
1	00-047456	Plate - Cassette Locating (Upper)	1
2	00-048489	Mach. Screw 8-32 x 3/8 Phil. Pan Hd.	3
3	00-047392	Retaining Plate - Roller	1
4	00-043369	Guide - Label	2
5	00-043367	Reflector	1
6	00-444660	Take-Up Assy.	1
7	00-043396	Needle Bearing	1
8	00-043351	Base - Cassette	1
9	00-443735	Spring - Cassette Eject	1
10	00-440635	Label - Threading Instructions	1
11	SA-021-39	Screw Assy. 8-32 x 3/8 Phil. Pan Hd.	4
12	00-043343	Rail - Guide (RH)	1
13	SD-015-40	Self-Tapping Screw 8-32 x 3/8 Phil. Pan Hd., Type TT	2
14	00-446589	Magnet - Disc	1
15	00-446917	Mach. Screw 8-32 x 1/8 Phil. Pan Hd.	1
16	00-043365	Bushing	1
17	00-043357	Peel Bar	1
18	00-447051	Cover - Cassette Front	1
19	00-043362	Gear - Take-Up (Incls. Set Screw)	1
20	00-043356	Spring - Cassette Latch	1
21	00-043355	Guide - Cassette	1
22	SD-015-40	Self-Tapping Screw 8-32 x 3/8 Phil. Pan Hd., Type TT	4
23	NS-008-25	Nut 8-32 Sq. Hd.	1
24	00-441172	Cap Screw 8-32 x 1-3/4 Hex Socket Hd.	1
25	00-043271	Washer - Wavy	1
26	00-043353	Latch - Cassette	1
27	00-043354	Pivot Block - Adjust	1
28	00-043363	Shaft - Idler	1
29	00-131761	Ball Bearing - Double-Shielded Radial	1
30	00-043269	Washer	1
31	00-032974	Gear - Idler (Incls. Item 32)	1
32	00-043365	Bushing	1
33	00-043360	Gear - Roller (Incls. Set Screw)	1
34	SC-018-34	Mach. Screw 8-32 x 1/2 Phil. Pan Hd.	1
35	00-047457	Plate - Cassette Locating (Lower)	1
36	00-446820	Kit - Media Hall Sensor	1
37	00-044631	Insulator - Media Sensor Board	1
38	SD-015-40	Self-Tapping Screw 8-32 x 3/8 Phil. Pan Hd., Type TT	2
39	00-043270	Rail - Guide (LH)	1
40	SD-015-40	Self-Tapping Screw 8-32 x 3/8 Phil. Pan Hd., Type TT	2
41	00-046479	Spring - Label Guide	1
42	SD-015-40	Self-Tapping Screw 8-32 x 3/8 Phil. Pan Hd., Type TT	1
43	00-047458	Bearing - Flange	1
44	00-043269	Washer	2
45	00-047455	Standoff	1
46	00-032914	Standoff	2
47	00-047506	Roller - Print	1
48	00-043269	Washer	1
49	00-043365	Bushing	1
50	00-444875-00005	Cassette Assy.	1

53 00-447770 Cassette Assy.

PART NOT ILLUSTRATED

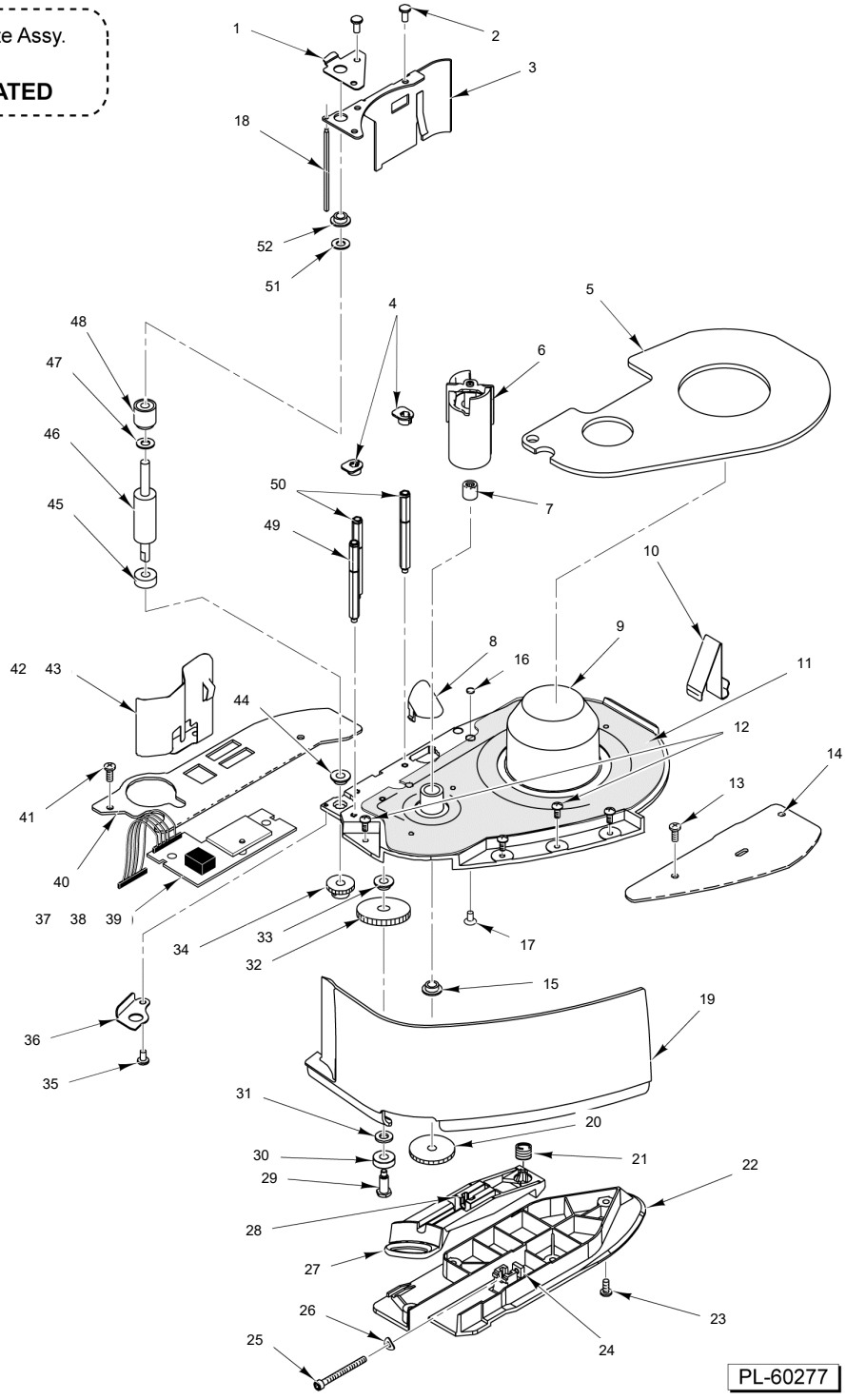

CASSETTE
(NARROW LABEL)

CASSETTE
(NARROW LABEL)

ILLUS.	PART NO.	NAME OF PART	AMT.
PL-22211			
1	00-047456	Plate - Cassette Locating (Upper)	1
2	00-048489	Mach. Screw 8-32 x 3/8 Phil. Pan Hd.	3
3	00-047392	Retaining Plate - Roller	1
4	00-043369	Guide - Label	2
5	00-032905	Spacer - Narrow Label	1
6	00-444660	Take-Up Assy.	1
7	00-043396	Needle Bearing	1
8	00-043367	Reflector	1
9	00-043351	Base - Cassette	1
10	00-443735	Spring - Cassette Eject	1
11	00-440635	Label - Threading Instructions	1
12	SA-021-39	Screw Assy. 8-32 x 3/8 Phil. Pan Hd.	4
13	SD-015-40	Self-Tapping Screw 8-32 x 3/8 Phil. Pan Hd., Type TT	2
14	00-043343	Rail - Guide (RH)	1
15	00-043365	Bushing	1
16	00-446589	Magnet - Disc	1
17	00-446917	Mach. Screw 8-32 x 1/8 Phil. Pan Hd.	1
18	00-043357	Peel Bar	1
19	00-447051	Cover - Cassette Front	1
20	00-043362	Gear - Take-Up (Incls. Set Screw)	1
21	00-043356	Spring - Cassette Latch	1
22	00-043355	Guide - Cassette	1
23	SD-015-40	Self-Tapping Screw 8-32 x 3/8 Phil. Pan Hd., Type TT	4
24	NS-008-25	Nut 8-32 Sq. Hd.	1
25	00-441172	Cap Screw 8-32 x 1-3/4 Hex Socket Hd.	1
26	00-043271	Washer - Wavy	1
27	00-043353	Latch - Cassette	1
28	00-043354	Pivot Block - Adjust	1
29	00-043363	Shaft - Idler	1
30	00-131761	Ball Bearing - Double-Shielded Radial	1
31	00-043269	Washer	1
32	00-032974	Gear - Idler (Incls. Item 33)	1
33	00-043365	Bushing	1
34	00-043360	Gear - Roller (Incls. Set Screw)	1
35	SC-018-34	Mach. Screw 8-32 x 1/2 Phil. Pan Hd.	1
36	00-047457	Plate - Cassette Locating (Lower)	1
37	00-446820	Kit - Media Hall Sensor	1
38	00-044631	Insulator - Media Sensor Board	1
39	SD-015-40	Self-Tapping Screw 8-32 x 3/8 Phil. Pan Hd., Type TT	2
40	00-043270	Rail - Guide (LH)	1
41	SD-015-40	Self-Tapping Screw 8-32 x 3/8 Phil. Pan Hd., Type TT	2
42	00-046479	Spring - Label Guide	1
43	SD-015-40	Self-Tapping Screw 8-32 x 3/8 Phil. Pan Hd., Type TT	1
44	00-047458	Bearing - Flange	1
45	00-032930	Spacer - Narrow Roller Bottom	1
46	00-047505	Roller - Print	1
47	00-032915	Spacer - Narrow Roller	1
48	00-047504	Support - Roller	1
49	00-047455	Standoff	1
50	00-032914	Standoff	2
51	00-043269	Washer	1
52	00-043365	Bushing	1
53	00-447770	Cassette Assy. - Narrow Label	1

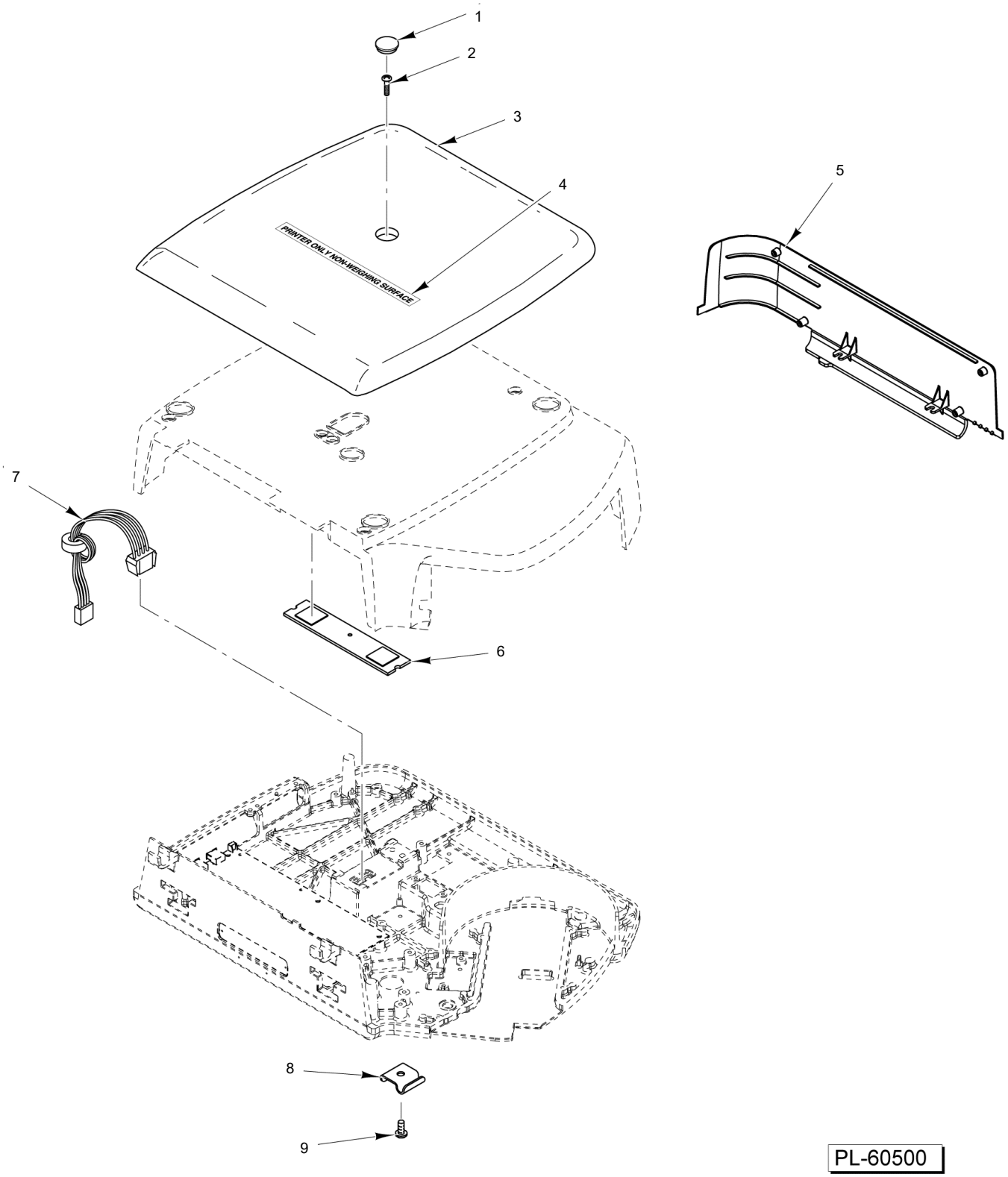

PL-60500

PRINTER ONLY
(ML-29360 & ML-29364)

PRINTER ONLY
(ML-29360 & ML-29364)

ILLUS.	PART NO.	NAME OF PART	AMT.
PL-24548			
1	00-447137	Plug - Cover	1
2	SC-018-31	Mach. Screw 8-32 x 3/8 Phil. Pan Hd.	1
3	00-445262-00005	Cover - Printer Top (Black)	1
4	00-445215	Label - Printer	1
5	00-447052	Panel - Housing Filler	1
6	00-447111	Bracket Assy. - Cover	1
7	00-445270-00001	Cable Assy.	1
8	00-443053	Clamp	1
9	SD-015-41	Self-Tapping Screw 8-32 x 1/2 Phil. Pan Hd., Type TT	1

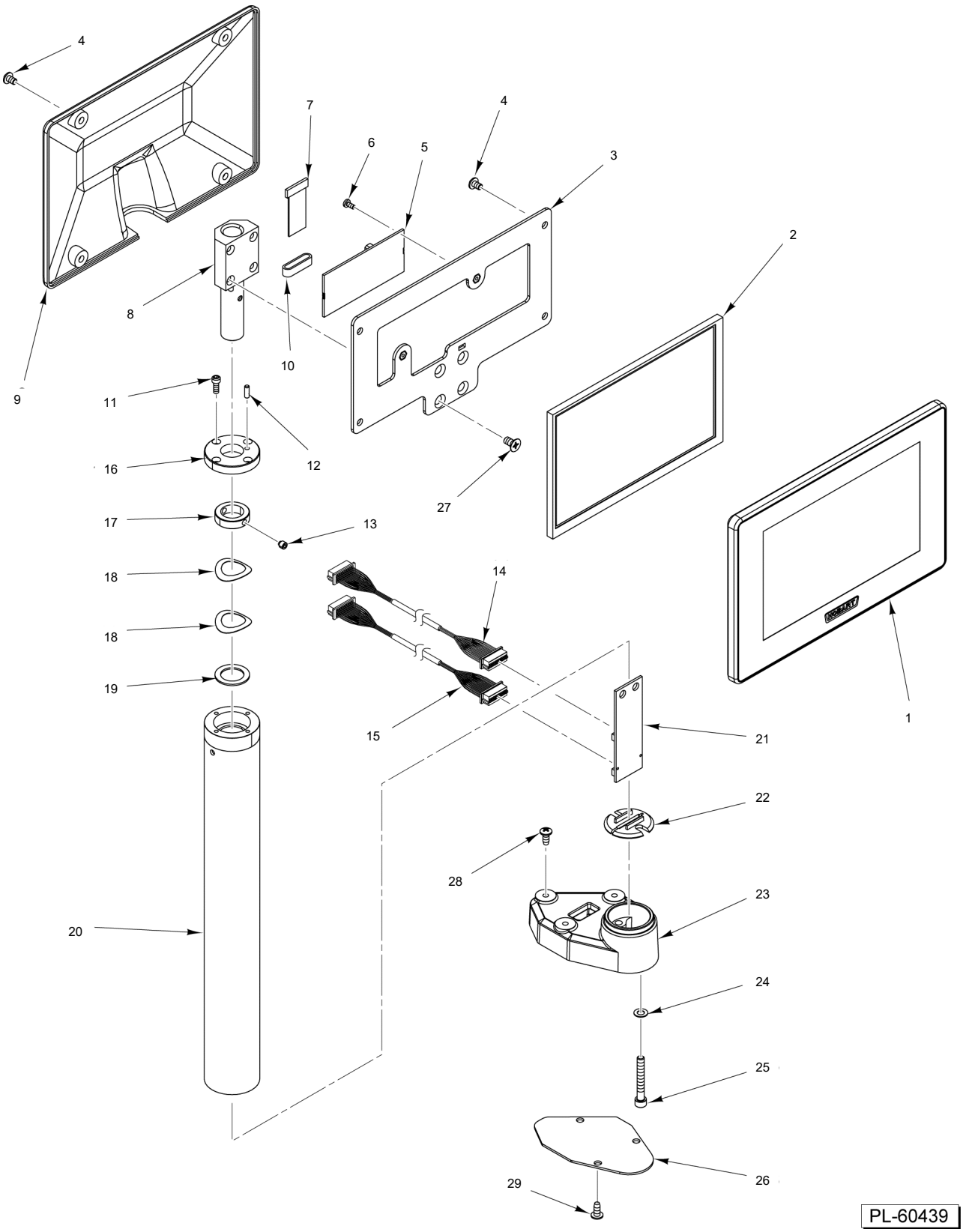

ELEVATED DISPLAY
(7 IN.)

ELEVATED DISPLAY
(7 IN.)

ILLUS.	PART NO.	NAME OF PART	AMT.
PL-23849			
1	00-447763	Housing Assy. (Front)	1
2	00-447762	Display (Color)	1
3	00-447122	Plate - Display Retainer	1
4	SC-018-30	Mach. Screw 8-32 x 1/4 Phil. Pan Hd.	8
5	00-447162	Board Assy.	1
6	SC-018-68	Mach. Screw 4-40 x 1/4 Phil. Pan Hd.	2
7	00-447199	Cable Assy.	1
8	00-447148	Block Assy. - Pivot	1
9	00-447126	Housing Assy. (Rear)	1
10	00-447066	Cable - Flex Ribbon (Ferrite)	1
11	SC-120-37	Cap Screw 6-32 x 3/8 Hex Socket Hd. (SST)	4
12	00-447143	Pin - Dowel	1
13	SC-088-55	Set Screw 10-32 x 3/16 Hex Hdls., Half Dog Pt.	2
14	00-447032	Cable Assy. (19 In.) (Located Inside Post)	1
15	00-447192	Cable Assy. (30 In.) (Located Inside Scale)	1
16	00-447710	Cap - Display Mount	1
17	00-447712	Collar	1
18	00-447714	Washer - Spring	2
19	00-447713	Washer - Thrust	1
20	00-447140	Tube - Display Mounting	1
21	00-447190	Board Assy. (Repeater)	1
22	00-447686	Retainer (PCB)	1
23	00-447132	Base - Elevated Display	1
24	WL-008-13	Lockwasher #10 Internal Shakeproof	2
25	SC-124-37	Cap Screw 10-24 x 1-3/8 Hex Socket Hd.	2
26	00-447131	Plate - Cover	1
27	SC-020-23	Mach. Screw 10-24 x 3/8 Phil. Flat Hd.	4
28	SD-015-40	Self-Tapping Screw 8-32 x 3/8 Phil. Pan Hd., Type TT	3
29	SD-015-40	Self-Tapping Screw 8-32 x 3/8 Phil. Pan Hd., Type TT	3

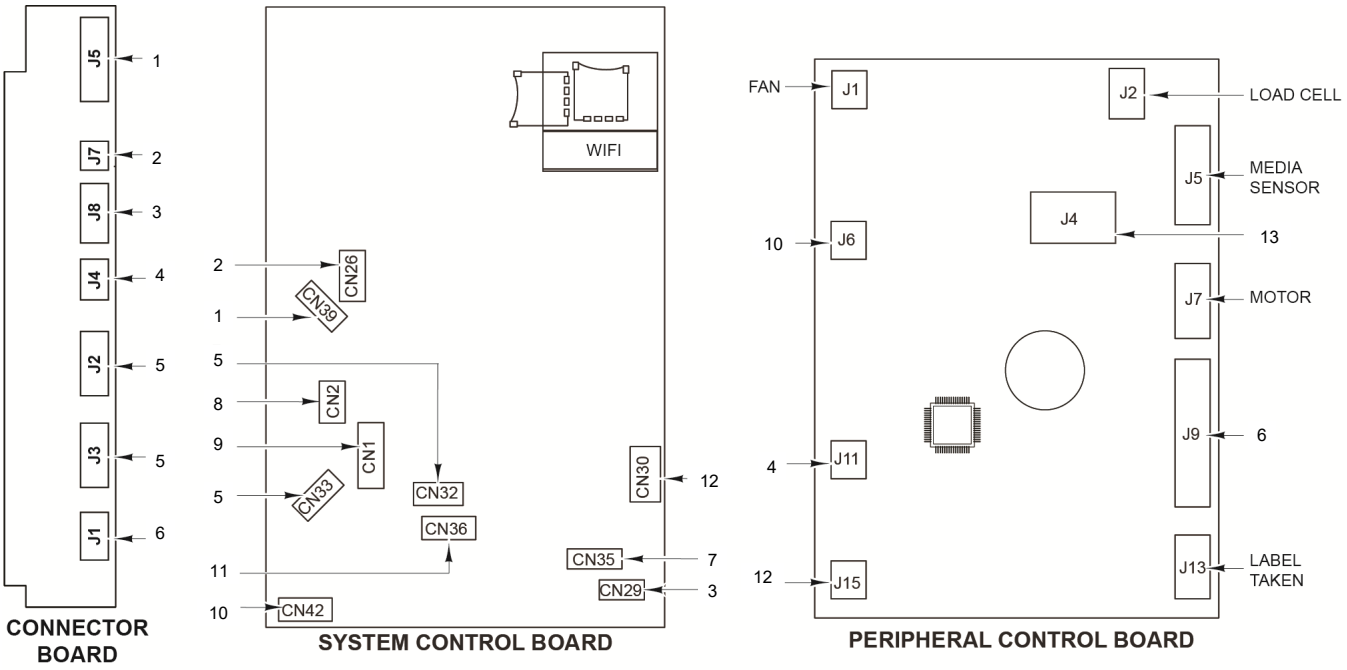

ITEM	CABLE PN	CONNECTOR BOARD CONNECTOR	SYS CNTR BOARD CONNECTOR	PERIPERAL BOARD CONNECTOR	FUNCTION (COMPONENT)
1	00-447524	J5	CN39	NA	ETHERNET - DATA (CABLE)
2	00-447028	J7	CN26	NA	ETHERNET - LED (CABLE)
3	00-447029	J8	CN29	NA	AUDIO (CABLE)
4	00-447025	J4	NA	J11	SERVICE SWITCH (CABLE)
5	00-447024	J2	CN32	NA	USB - HUB (CABLE)
		J3	CN33	NA	USB - HUB (CABLE)
6	00-444846	NA	NA	J9	PRINTHEAD DATA (CABLE)
7	00-447026	J1	CN35	NA	REBOOT / SHUTDOWN SWITCH (CABLE)
8	00-447032	NA	CN2	NA	CUSTOMER DISPLAY (CABLE)
9	00-447095	NA	CN1	NA	OPERATOR DISPLAY (CABLE)
10	00-447023	NA	CN42	J6	24 VDC POWER (CABLE)
11	00-447167	NA	CN36	NA	TOUCHSCREEN (CABLE)
12	00-447544	NA	CN30	J15	USB - HOST (CABLE)
13	00-444769	NA	NA	J4	DC POWER (CABLE)

PL-65168

CABLES - CONNECTOR BOARD (SYSTEM CONTROL / PERIPHERAL BOARD)

CABLES - CONNECTOR BOARD
(SYSTEM CONTROL / PERIPHERAL BOARD)

ILLUS.	PART NO.	NAME OF PART	AMT.
PL-30363			
1	00-447524	Cable Assy. - Ethernet Data	1
2	00-447028	Cable Assy. - Ethernet LED	1
3	00-447029	Cable Assy. - Audio	1
4	00-447025	Cable Assy. - Service Switch	1
5	00-447024	Cable Assy. - USB Hub	2
6	00-444846	Cable Assy. - Printhead Data	1
7	00-447026	Cable Assy. - Reboot Switch	1
8	00-447032	Cable Assy. - Customer Display (Elevated)	1
9	00-447095	Cable Assy. - Operator Display	1
10	00-447023	Cable Assy. - 24 VDC Power	1
11	00-447167	Cable Assy. - Touchscreen	1
12	00-447544	Cable Assy. - USB (Host)	1
13	00-444769	Cable Assy. - DC Power	1

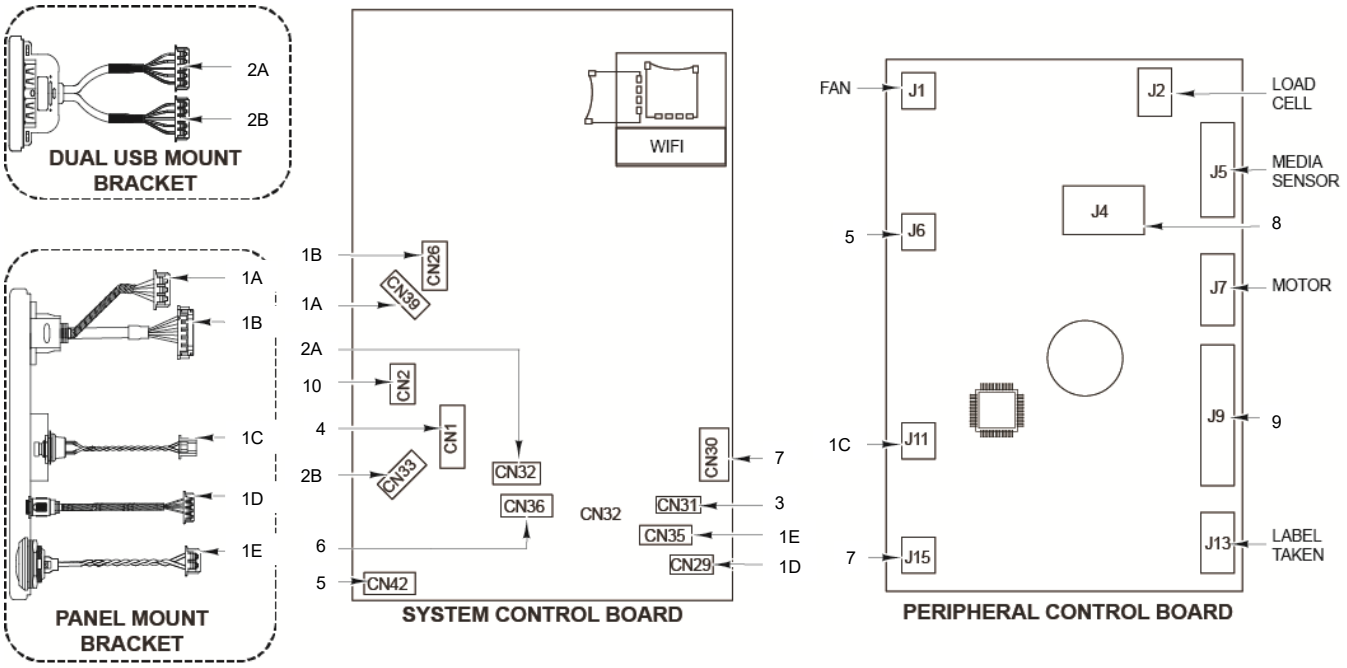

ITEM	CABLE PN	SYS CNTRL BOARD CONNECTOR	PERIPHERAL BOARD CONNECTOR	FUNCTION (COMPONENT)
1A	00-448030	CN39	NA	ETHERNET - DATA (PANEL MOUNT BRACKET CABLE)
1B		CN26	NA	ETHERNET - LED (PANEL MOUNT BRACKET CABLE)
1C		NA	J11	SERVICE SWITCH (PANEL MOUNT BRACKET CABLE)
1D		CN29	NA	AUDIO (PANEL MOUNT BRACKET)
1E		CN35	NA	REBOOT / SHUTDOWN SWITCH (PANEL MOUNT BRACKET CABLE)
2A	00-448056	CN33	NA	USB (DUAL USB MOUNTING BRACKET CABLE)
2B		CN32	NA	USB (DUAL USB MOUNTING BRACKET CABLE)
3	00-448195	CN31	NA	USB - SCANNER (CABLE)
4	00-448199	CN1	NA	OPERATOR DISPLAY (CABLE)
5	00-447023	CN42	J6	24 VDC POWER (CABLE)
6	00-448198	CN36	NA	TOUCHSCREEN (CABLE)
7	00-447544	CN30	J15	USB - HOST (CABLE)
8	00-444769	NA	J4	DC POWER (CABLE)
9	00-444846	NA	J9	PRINTEHAD DATA (CABLE)
10	00-447032	CN2	NA	CUSTOMER DISPLAY (CABLE)

PL-65166

CABLES - PANEL MOUNT (SYSTEM CONTROL / PERIPHERAL BOARD)

CABLES - PANEL MOUNT
(SYSTEM CONTROL / PERIPHERAL BOARD)

ILLUS.	PART NO.	NAME OF PART	AMT.
PL-30344			
1	00-448030	Bracket Assy. (Panel Mount)	1
2	00-448056	Bracket Assy. (USB Panel Mount)	1
3	00-448195	Cable Assy. - USB (Scanner)	1
4	00-448199	Cable Assy. - Operator Display	1
5	00-447023	Cable Assy. - 24 VDC Power	1
6	00-448198	Cable Assy. - Touchscreen	1
7	00-447544	Cable Assy. - USB (Host)	1
8	00-444769	Cable Assy. - DC Power	1
9	00-444846	Cable Assy. - Printhead Data	1

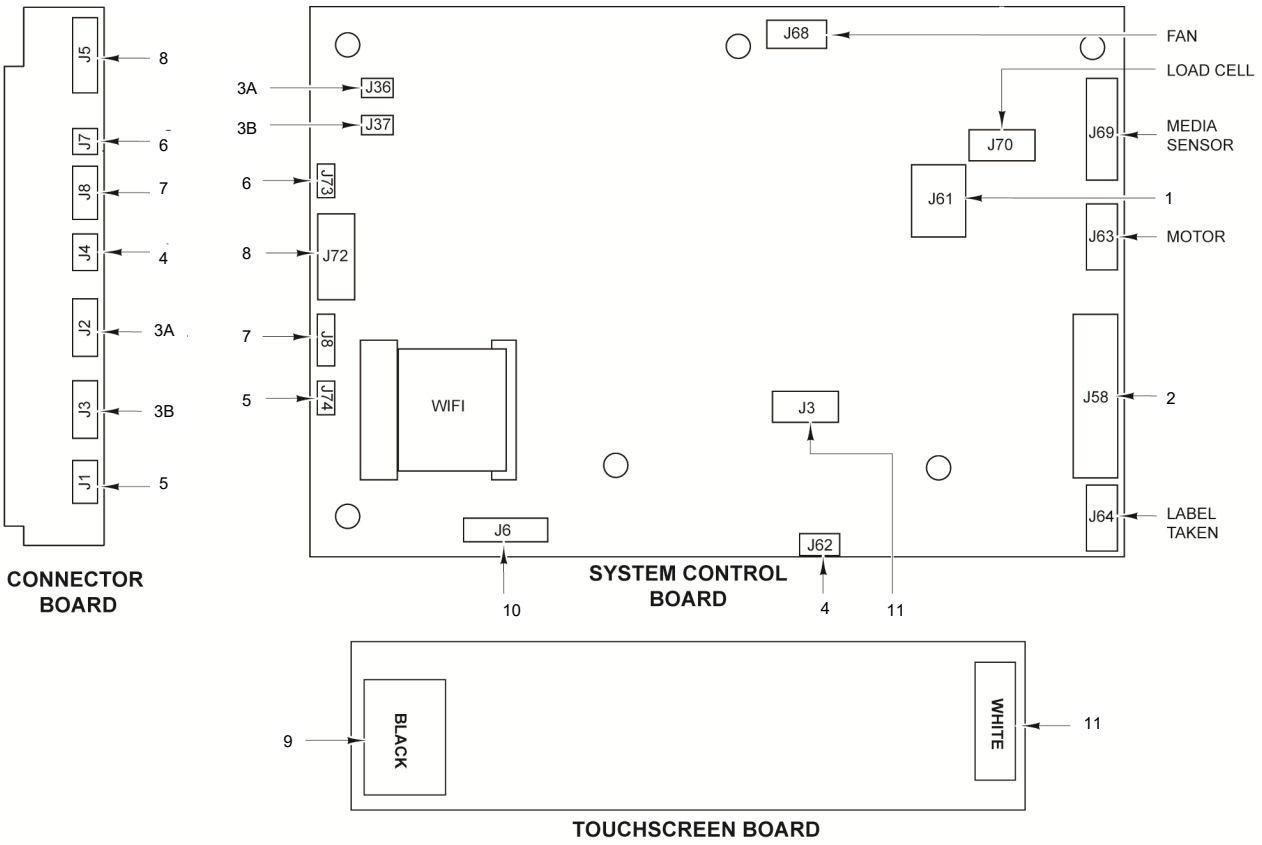

ITEM	CABLE PN	CONNECTOR BOARD CONNECTOR	SYS CNTR BOARD CONNECTOR	TOUCH SCREEN BOARD CONNECTOR	FUNCTION (COMPONENT)
1	00-444769	NA	J61	NA	DC POWER (CABLE)
2	00-444846	NA	J58	NA	PRINTHEAD DATA (CABLE)
3A	00-447024	J2	J36	NA	USB (CABLE)
3B		J3	J37	NA	USB (CABLE)
4	00-447025	J4	J62	NA	SERVICE SWITCH (CABLE)
5	00-447026	J1	J74	NA	REBOOT / SHUTDOWN SWITCH (CABLE)
6	00-447028	J7	J73	NA	ETHERNET - LED (CABLE)
7	00-447029	J8	J8	NA	AUDIO (CABLE)
8	00-447524	J5	J72	NA	ETHERNET - DATA (CABLE)
9	00-448198	NA	NA	BLACK	TOUCHSCREEN (CABLE)
10	00-448199	NA	J6	NA	OPERATOR DISPLAY (CABLE)
11	00-449483	NA	J3	WHITE	TOUCHSCREEN (CABLE)

PL-65167

CABLES - CONNECTOR BOARD (ARA SYSTEM CONTROL BOARD)

CABLES - CONNECTOR BOARD
(ARA SYSTEM CONTROL BOARD)

ILLUS.	PART NO.	NAME OF PART	AMT.
PL-30362			
1	00-444769	Cable Assy. - DC Power	1
2	00-444846	Cable Assy. - Printhead Data	1
3	00-447024	Cable Assy. - USB	2
4	00-447025	Cable Assy. - Service	1
5	00-447026	Cable Assy. - Reboot / Shutdown	1
6	00-447028	Cable Assy. - Ethernet LED	1
7	00-447029	Cable Assy. - Audio	1
8	00-447524	Cable Assy. - Ethernet Data	1
9	00-448198	Cable Assy. - Touchscreen	1
10	00-448199	Cable Assy. - Operator Display	1
11	00-449483	Cable Assy. - USB Touchscreen	1

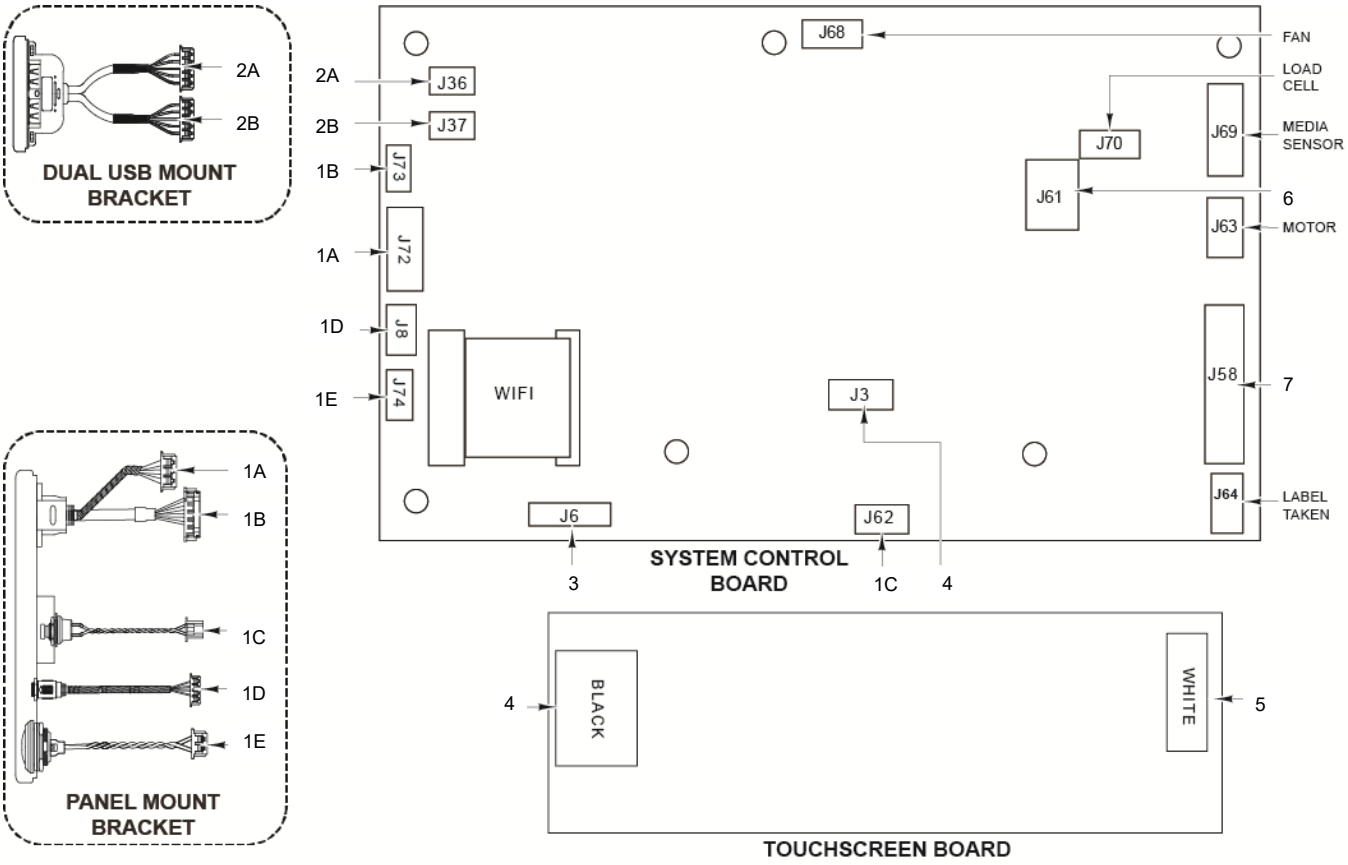

ITEM	CABLE PN	SYS CNTR BOARD CONNECTOR	TOUCH SCREEN BOARD CONNECTOR	FUNCTION (COMPONENT)
1A	00-448030	J72	NA	ETHERNET - DATA (PANEL BRACKET MOUNT CABLE)
1B		J73		ETHERNET - LED (PANEL BRACKET MOUNT CABLE)
1C		J62		SERVICE SWITCH (PANEL MOUNT BRACKET CABLE)
1D		J8		AUDIO (PANEL MOUNT BRACKET)
1E		J74		REBOOT / SHUTDOWN SWITCH (PANEL MOUNT BRACKET CABLE)
2A	00-448056	J36	NA	USB (DUAL USB MOUNTING BRACKET)
2B		J37		USB (DUAL USB MOUNTING BRACKET)
3	00-448199	J6	NA	OPERATOR DISPLAY (CABLE)
4	00-448198	NA	BLACK	TOUCHSCREEN (CABLE)
5	00-449483	J3	WHITE	TOUCHSCREEN (CABLE)
6	00-444769	J61	NA	DC POWER (CABLE)
7	00-444846	J58	NA	PRINTHEAD DATA (CABLE)

PL-65163

CABLES - PANEL MOUNT
(ARA SYSTEM CONTROL BOARD)

CABLES - PANEL MOUNT
(ARA SYSTEM CONTROL BOARD)

ILLUS.	PART NO.	NAME OF PART	AMT.
PL-30340			
1	00-448030	Bracket Assy. (Panel Mount)	1
2	00-448056	Bracket Assy. (USB Panel Mount)	1
3	00-448199	Cable Assy. - Operator Display	1
4	00-448198	Cable Assy. - Touchscreen	1
5	00-449483	Cable Assy. - USB Touchscreen	1
6	00-444769	Cable Assy. - DC Power	1
7	00-444846	Cable Assy. - Printhead Data	1

(PREVIOUS CONSTRUCTION)

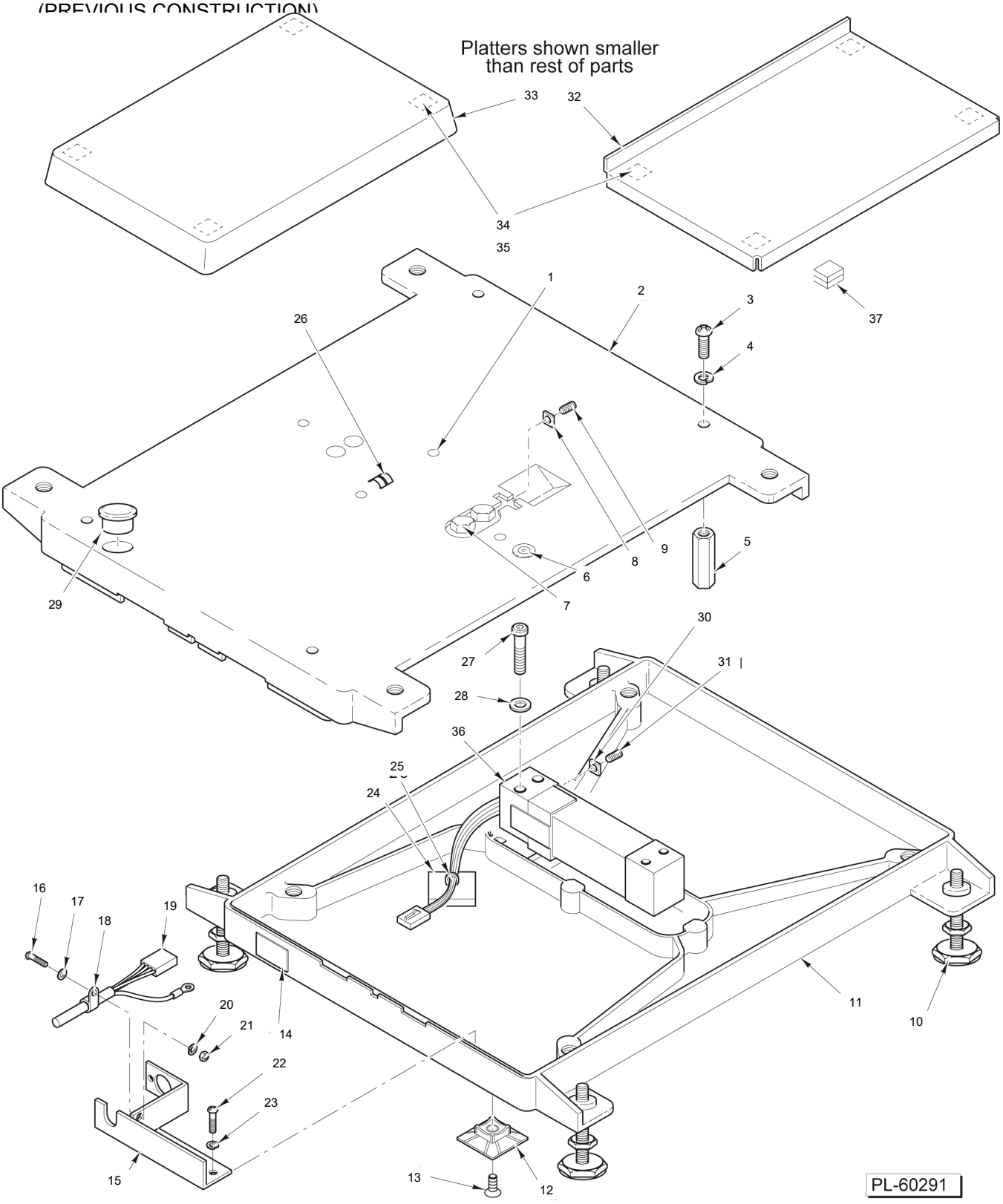

SCALE UNIT
(USED WITH TWO-PIECE SCALE/PRINTER)

SCALE UNIT
(USED WITH TWO-PIECE SCALE/PRINTER)

ILLUS.	PART NO.	NAME OF PART	AMT.
PL-22442			
1	SC-123-20	Set Screw 10-32 x 3/8 Hex Hdls., Socket Hd.	2
2	00-041559	Support - Platter	1
3	SC-113-08	Mach. Screw 10-32 x 1/2 Phil. Pan Hd.	4
4	WL-004-40	Lockwasher #10 Helical	4
5	00-441780	Stop - Loadcell	4
6	00-013931	Level - Spirit	1
7	SC-110-12	Cap Screw 1/4-20 x 5/8 Hex Hd.	2
8	NS-046-58	Nut 10-32 Square	1
9	SC-123-20	Set Screw 10-32 x 3/8 Hex Hdls., Socket Hd.	1
10	00-093160	Foot - Leveling Screw	4
11	00-042604	Base Assy.	1
12	00-446051	Holder - Tie-Down	1
13	SC-022-07	Mach. Screw 8-32 x 1/4 Slotted Flat Hd. (SST)	1
14	00-184534	Label - Capacity	1
15	00-441657	Clamp - Cable	1
16	SC-018-31	Mach. Screw 8-32 x 3/8 Phil. Pan Hd.	1
17	WS-019-41	Washer (SST)	1
18	00-253363	Clamp	1
19	00-183634	Cable - Scale	1
20	WL-003-12	Lockwasher #8 Helical	1
21	NS-009-12	Nut 8-32 Hex	1
22	SC-018-31	Mach. Screw 8-32 x 3/8 Phil. Pan Hd.	2
23	WL-003-12	Lockwasher #8 Helical	2
24	00-255503	Mount - Cable Tie	1
25	00-251199	Tie - Cable (4 In. Long)	1
26	00-184929	Contact - Compression Spring (Qty. of 8)	0
27	SC-120-70	Cap Screw 1/4-20 x 1-5/8 Hex Socket Hd.	2
28	WL-003-39	Lockwasher 1/4 Light	2
29	00-041562	Plug - Transparent (1/2)	1
30	NS-046-58	Nut 10-32 Square	1
31	SC-123-20	Set Screw 10-32 x 3/8 Hex Hdls., Socket Hd.	1
32	00-043813	Platter (Incls. Items 34 & 35)	1
33	00-043812	Platter (Incls. Items 34 & 35)	1
34	00-258959	Fastener - Dual Lock	4
35	00-258958	Fastener - Dual Lock	4
36	00-443075	Load Cell - Multiple Range (15 kg) (ML-29256)	1
37	00-259185	Pad - Platter	4