HOBART

CATALOG OF REPLACEMENT PARTS





HUV SERIES
DELI DISPLAY CASE

HUV3P	**ML-132065**	**3-PAN, FULL SERVICE**
	ML-132066	**3-PAN, SELF SERVICE**
	ML-132080	**3-PAN, FULL SERVICE**
HUV4P	**ML-132067**	**4-PAN, FULL SERVICE**
	ML-132068	**4-PAN, SELF SERVICE**
	ML-132081	**4-PAN, FULL SERVICE**
HUV5P	**ML-132069**	**5-PAN, FULL SERVICE**
	ML-132070	**5-PAN, SELF SERVICE**
	ML-132082	**5-PAN, FULL SERVICE**
HUV7P	**ML-132084**	**7-PAN, FULL SERVICE**
HUV3P/2	**ML-132071**	**3-PAN, FULL SERVICE/ 2-PAN, SELF SERVICE**

A product of HOBART 701 S. RIDGE AVENUE TROY, OHIO 45374-0001

FORM 43079 Rev. A (June 2004)

 © HOBART

Contents

5 Controls
7 Electrical Components
9 Well Components
11 Retainer Slide Doors
13 Front and Side Glass
15 Heating, Cooling, and Humidity Components
17 Lights and Cutting Board
19 Display Case Base

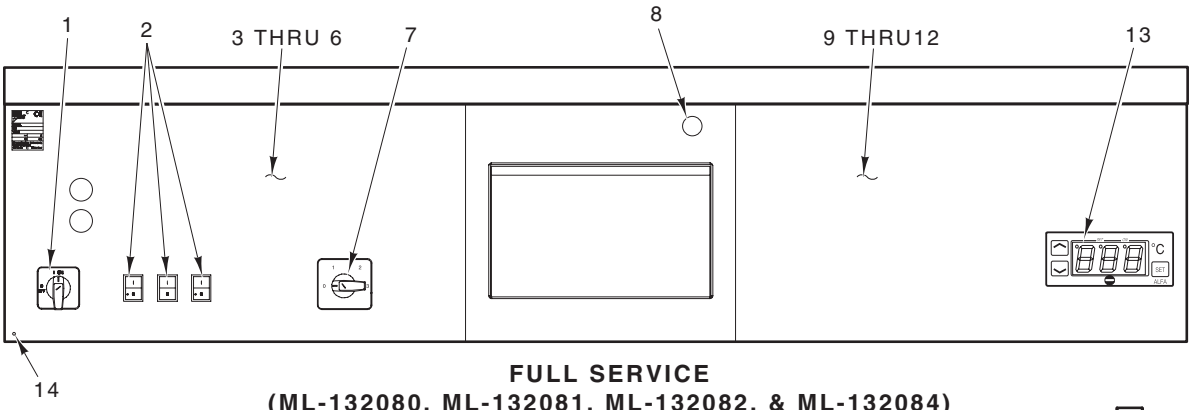

FULL SERVICE
(ML-132080, ML-132081, ML-132082, & ML-132084)

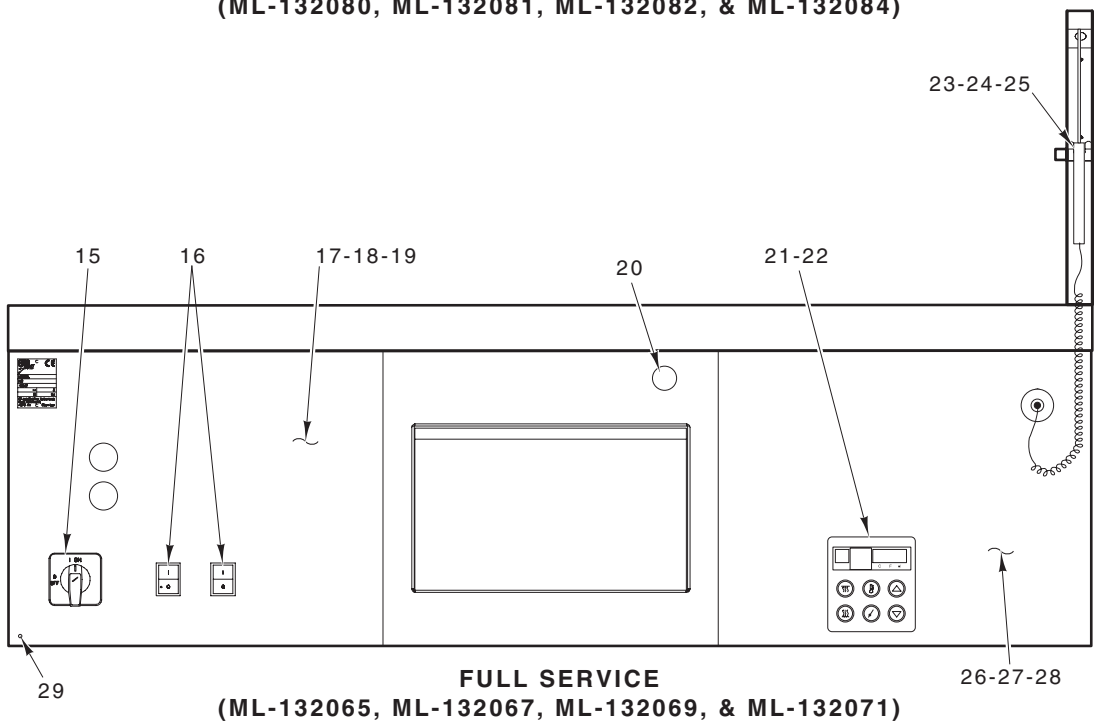

FULL SERVICE
(ML-132065, ML-132067, ML-132069, & ML-132071)

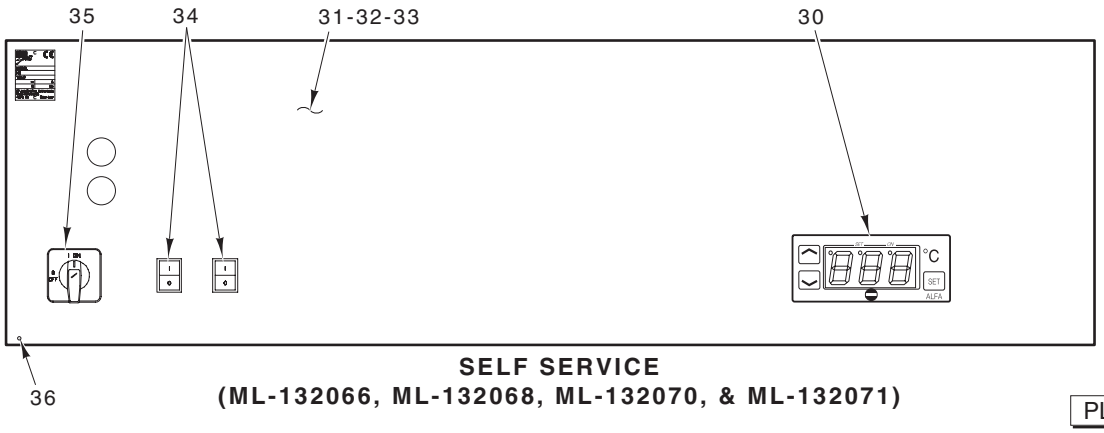

SELF SERVICE
(ML-132066, ML-132068, ML-132070, & ML-132071)

PL-56972

CONTROLS

CONTROLS

ILLUS. PL-56972	PART NO.	NAME OF PART	AMT.
1	00-877707-00028	Switch – Rotary (Main Power)	1
2	00-877707-00029	Switch – Toggle (Lights & Heater)	3
3	00-877707-00328	Panel – Left (HUV3P)	1
4	00-877707-00428	Panel – Left (HUV4P)	1
5	00-877707-00528	Panel – Left (HUV5P)	1
6	00-877707-00717	Panel – Left (HUV7P)	1
7	00-877707-00093	Switch – Rotary (Humidity Tray Heat)	1
8	00-877707-00015	Lamp – Water Level Low	1
9	00-877707-00329	Panel – Right (HUV3P)	1
10	00-877707-00429	Panel – Right (HUV4P)	1
11	00-877707-00529	Panel – Right (HUV5P)	1
12	00-877707-00718	Panel – Right (HUV7P)	1
13	00-877707-00004	Controller (Includes Sensor)	1
14	00-877707-00061	Mach. Screw M5 X 12 Hex Button Hd.	1
15	00-877707-00028	Switch – Rotary (Main Power)	1
16	00-877707-00029	Switch – Toggle (Lights & Heater)	2
17	00-877707-00317	Panel – Left (HUV3P)	1
18	00-877707-00417	Panel – Left (HUV4P)	1
19	00-877707-00517	Panel – Left (HUV5P)	1
20	00-877707-00015	Lamp – Water Level Low	1
21	00-877707-00002	Keypad – Controller (Full Service)	1
22	00-877707-00001	Controller (Full Service) (Behind Panel)	1
23	00-877707-00013	Probe – Food (Full Service)	1
24	00-877707-00059	Holder – Food Probe	1
25	00-877707-00060	Mach. Screw M5 X 10 Hex Button Hd.	2
26	00-877707-00318	Panel – Right (HUV3P)	1
27	00-877707-00418	Panel – Right (HUV4P)	1
28	00-877707-00518	Panel – Right (HUV5P)	1
29	00-877707-00061	Mach. Screw M5 X 12 Hex Button Hd.	1
30	00-877707-00004	Controller (Includes Sensor)	1
31	00-877707-00319	Panel (HUV3P)	1
32	00-877707-00419	Panel (HUV4P)	1
33	00-877707-00519	Panel (HUV5P)	1
34	00-877707-00029	Switch – Rotary (Lights & Heater)	2
35	00-877707-00028	Switch – Rotary (Main Power)	1
36	00-877707-00061	Mach. Screw M5 X 12 Hex Bottom Hd.	AR

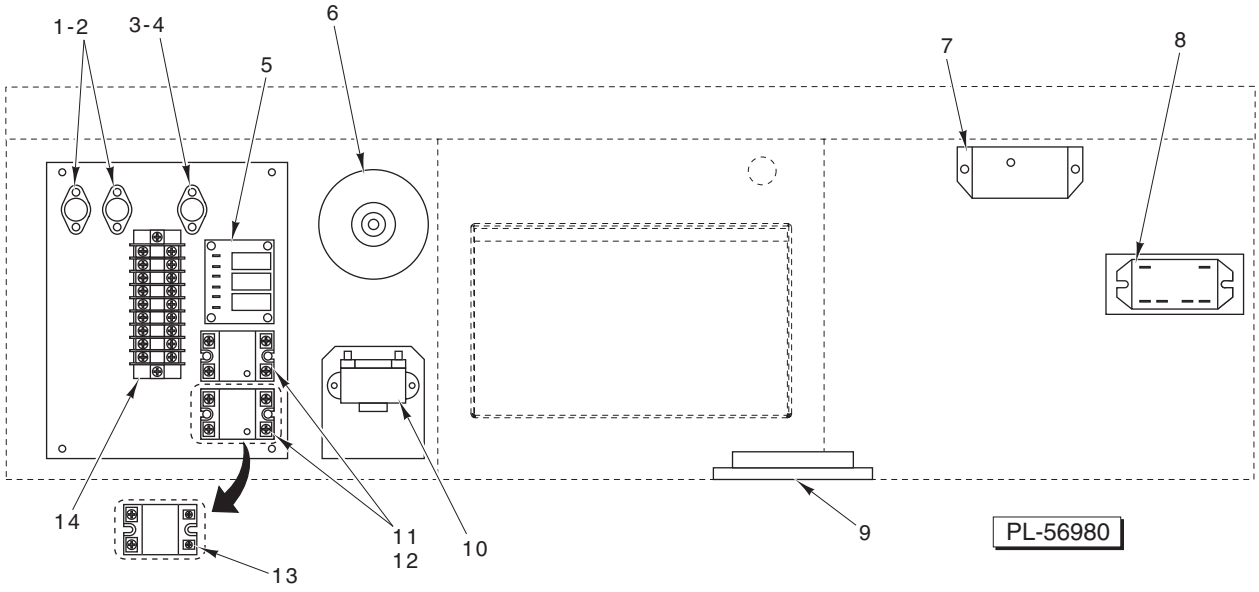

ELECTRICAL COMPONENTS

ELECTRICAL COMPONENTS

ILLUS. PL-56980	PART NO.	NAME OF PART	AMT.
1	00-877707-00023	Fuse (1.5 Amp.) (For 230 V. Secondary)	2
2	00-356840	Holder – Fuse	2
3	00-877707-00024	Fuse (2.5 Amp.) (For 12 V. Secondary)	1
4	00-356840	Holder – Fuse	1
5	00-877707-00027	Board – Line Filter	AR
6	00-877707-00021	Transformer (208 V./230 V.)	1
7	00-877707-00005	Board – Water Level Control (Full Service)	1
8	00-877707-00016	Contactor – Humidity Element	1
9	00-877707-00033	Ballast – Light	2
10	00-877707-00022	Transformer (230 V./12 V.) (Self Service)	1
11	00-877707-00019	Relay – Solid State (25 Amp.) (Well/Humidity Elements) (ML-132065, ML-123067, ML-132069, & ML-132071)	AR
12	00-877707-00098	Relay – Electromechanical (ML-132080, ML-132081, ML-132082, & ML-132084)	2
13	00-877707-00020	Relay – Solid State (25 Amp.) (Well Elements) (Self Service)	1
14	00-425900-00143	Block – Terminal (9-Position) (In Control Box)	AR
	00-422905-00097	Fuse (10 Amp.)	1
	00-877707-00032	Bus Bar – Ground	AR
	00-877707-00030	Block – Terminal (In Field Wiring Box) 1-2-3	1
	00-877707-00056	Block – Terminal (In Field Wiring Box) 4-5-6	1

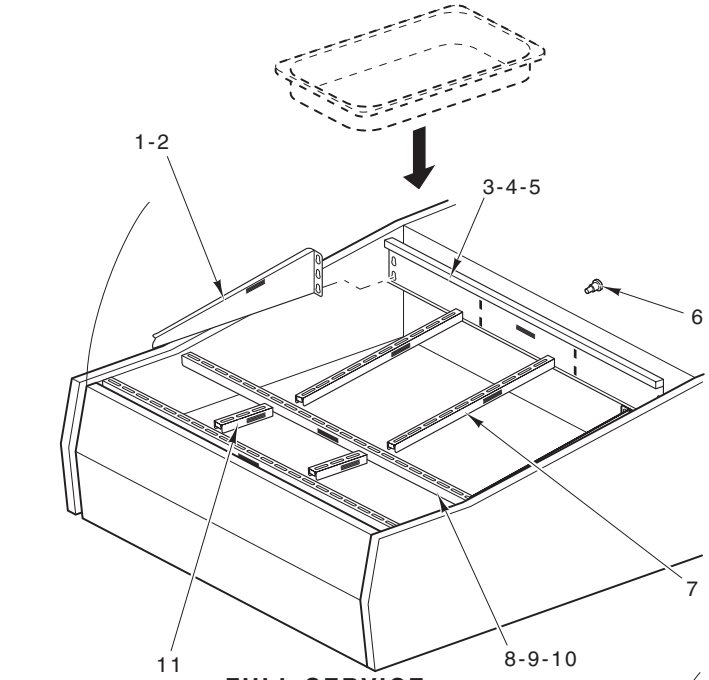

FULL SERVICE
(ML-132065, ML-132067,
ML-132069, & ML-132071)

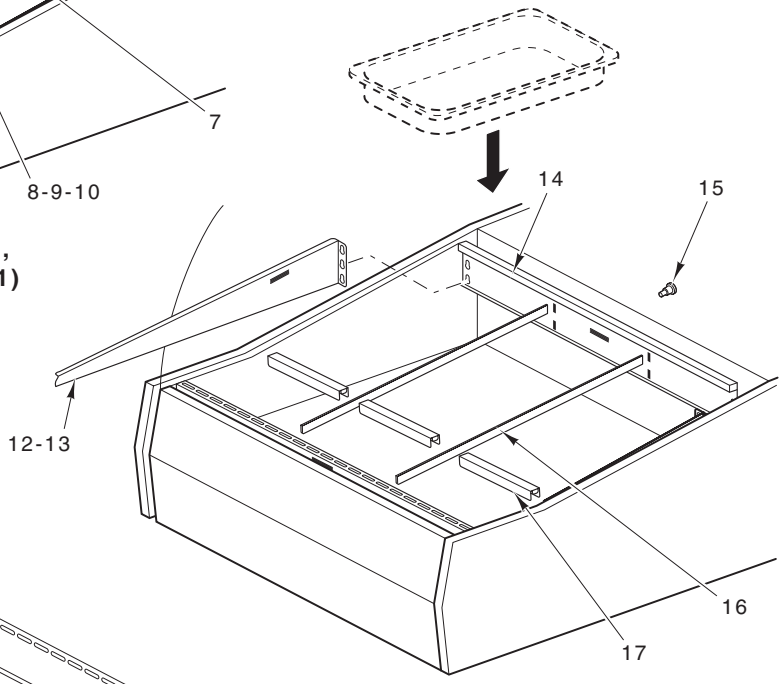

FULL SERVICE
(ML-132080, ML-132081,
ML-132082, & ML-132084)

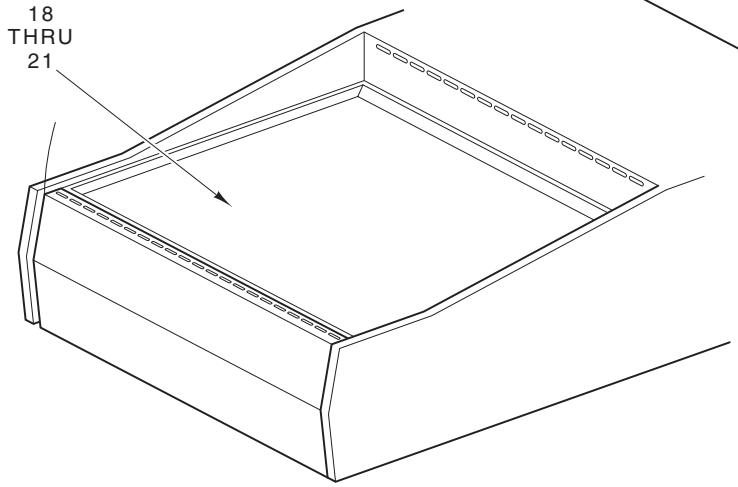

SELF SERVICE
(ML-132066, ML-132068,
ML-132070, & ML-132071)

PL-56971

WELL COMPONENTS

WELL COMPONENTS

ILLUS. PL-56971	PART NO.	NAME OF PART	AMT.
1	00-877707-00048	Plate – Adjustment (Side) 0-10 Deg. (LH) (ML-132065, ML-132067, ML-132069, & ML-132071)	1
2	00-877707-00049	Plate – Adjustment (Side) 0-10 Deg. (RH) (ML-132065, ML-132067, ML-132069, & ML-132071)	1
3	00-877707-00307	Plate – Adjustment (Back) (HUV3P & HUV3P/2)	1
4	00-877707-00407	Plate – Adjustment (Back) (HUV4P)	1
5	00-877707-00507	Plate – Adjustment (Back) (HUV5P)	1
6	00-877707-00038	Pin – Pan Frame	AR
7	00-877707-00041	Bar – Divider (Full Size Pan Length) (ML-132065, ML-132067, ML-132069, & ML-132071)	AR
8	00-877707-00306	Bar – Divider (3 Zone Width) (ML-132065 & ML-132071)	AR
9	00-877707-00406	Bar – Divider (4 Zone Width) (ML-132067)	AR
10	00-877707-00506	Bar – Divider (5 Zone Width) (ML-132069)	AR
11	00-877707-00042	Bar – Divider (1/3 Pan Length) (ML-132065, ML-132067, ML-132069, & ML-132071)	AR
12	00-877707-00101	Plate – Adjustment (Side) 0-10 Deg. (LH) (ML-132080, ML-132081, ML-132082, & ML-132084)	1
13	00-877707-00102	Plate – Adjustment (Side) 0-10 Deg. (RH) (ML-132080, ML-132081, ML-132082, & ML-132084)	1
14	00-877707-00707	Plate – Adjustment (Back) (HUV7P)	1
15	00-877707-00038	Pin – Pan Frame	AR
16	00-877707-00100	Bar – Divider (1-1/3 Pan Length) (ML-132080, ML-132081, ML-132082, & ML-132084)	1
17	00-877707-00040	Bar – Divider (1 Zone Width)	1
18	00-877707-00305	Plate – Bottom (SST) (HUV3P)	1
19	00-877707-00405	Plate – Bottom (SST) (HUV4P)	1
20	00-877707-00505	Plate – Bottom (SST) (HUV5P)	AR
21	00-877707-00605	Plate – Bottom (SST) (HUV3P/2)	AR
	00-877707-00039	Bar – (Divider 2/3 Pan Length) (Optional) (Full Service) (ML-132065, ML-132067, ML-132069, & ML-132071)	AR
	00-118363	Logo – Hobart 4 In. (Mylar)	1

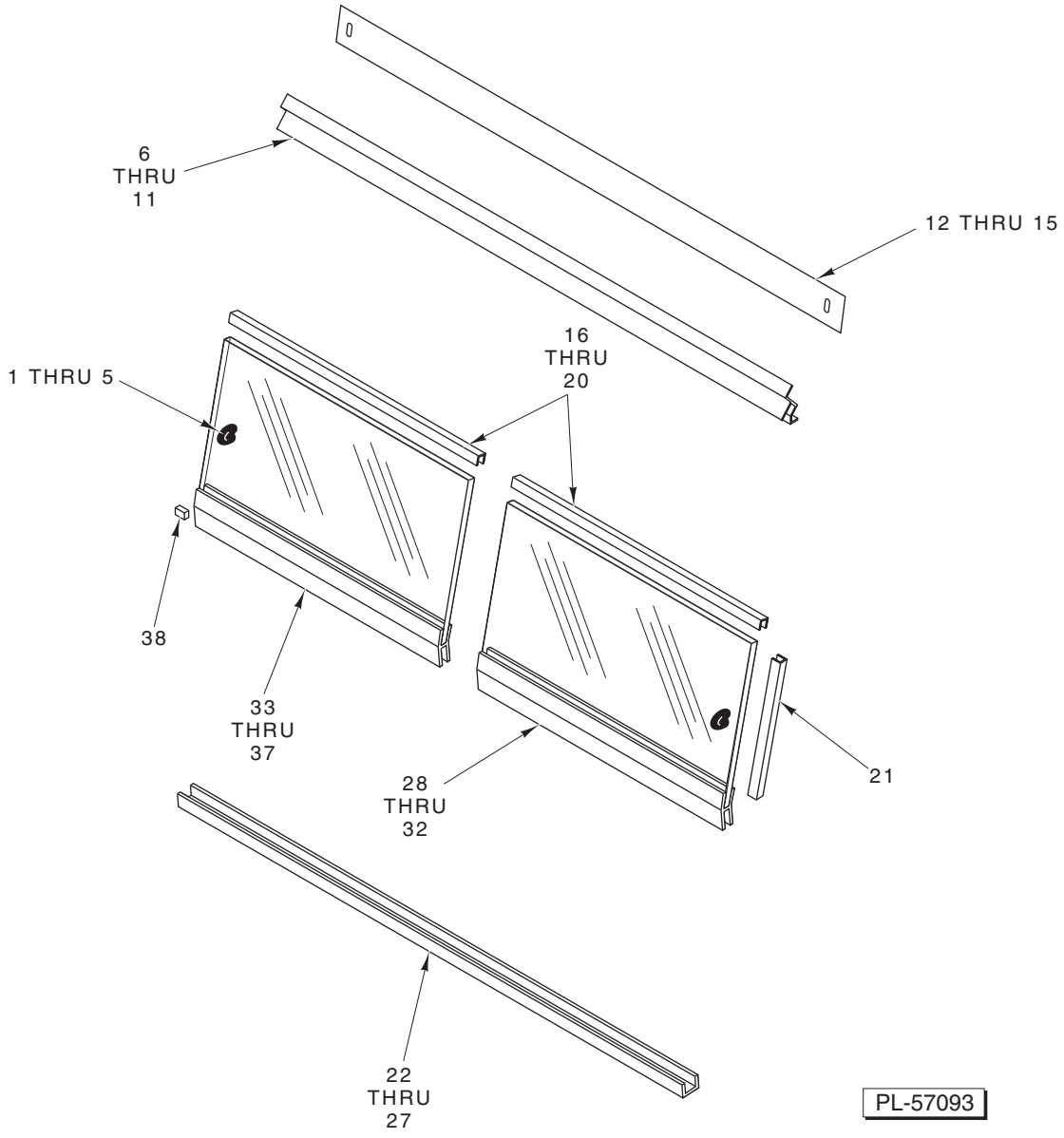

RETAINER SLIDE DOORS

RETAINER SLIDE DOORS

ILLUS. PL-57093	PART NO.	NAME OF PART	AMT.
1	00-877707-00058	Knob – Slide Door	AR
2	00-357553-00104	Screw	2
3	00-358521-00042	Washer	2
4	00-877707-00089	Bracket – Door Handle	AR
5	00-877707-00090	Bumper – Rubber	AR
6	00-877707-00320	Track – Upper (HUV3P & HUV3P/2 Full Service)	2
7	00-877707-00420	Track – Upper (HUV4P)	2
8	00-877707-00520	Track – Upper (HUV5P)	2
9	00-877707-00620	Track – Upper (HUV3P/2 Self Service)	2
10	00-877707-00720	Track – Upper (HUV7P)	2
11	00-877707-00060	Mach. Screw M5 X 10 Hex Button Hd.	AR
12	00-877707-00322	Slide Vent (HUV3P & HUV3P/2 Full Service)	2
13	00-877707-00422	Slide Vent (HUV4P Full Service)	2
14	00-877707-00522	Slide Vent (HUV5P Full Service)	2
15	00-877707-00722	Slide Vent (HUV7P Full Service)	2
16	00-877707-00315	Strip – Clear (For Door Top) (HUV3P & HUV3P/2 Full Service)	2
17	00-877707-00415	Strip – Clear (For Door Top) (HUV4P)	2
18	00-877707-00515	Strip – Clear (For Door Top) (HUV5P)	2
19	00-877707-00615	Strip – Clear (For Door Top) (HUV3P/2 Self Service)	2
20	00-877707-00715	Strip – Clear (For Door Top) (HUV7P)	4
21	00-877707-00037	Strip – Clear (For Side of Door)	2
22	00-877707-00321	Track – Lower (HUV3P & HUV3P/2 Full Service)	2
23	00-877707-00421	Track – Lower (HUV4P)	2
24	00-877707-00521	Track – Lower (HUV5P)	2
25	00-877707-00621	Track – Lower (HUV3P/2 Self Service)	2
26	00-877707-00721	Track – Lower (HUV7P)	2
27	00-422905-00059	Mach. Screw M5 X 8	AR
28	00-877707-00314	Door – Sliding (Mirror) (RH) (HUV3P) (HUV3P/2 Full Service)	1
29	00-877707-00414	Door – Sliding (Mirror) (RH) (HUV4P)	1
30	00-877707-00514	Door – Sliding (Mirror) (RH) (HUV5P)	1
31	00-877707-00614	Door – Sliding (Mirror) (RH) (HUV3P/2) (Self Service)	1
32	00-877707-00714	Door – Sliding (Mirror) (RH) (HUV7P)	2
33	00-877707-00313	Door – Sliding (Mirror) (LH) (HUV3P) (HUV3P/2 Full Service)	1
34	00-877707-00413	Door – Sliding (Mirror) (LH) (HUV4P)	1
35	00-877707-00513	Door – Sliding (Mirror) (LH) (HUV5P)	1
36	00-877707-00613	Door – Sliding (Mirror) (LH) (HUV3P/2) (Self Service)	1
37	00-877707-00713	Door – Sliding (Mirror) (LH) (HUV7P	2
38	00-877707-00055	Block – Slide (For Door) (Nylon)	AR

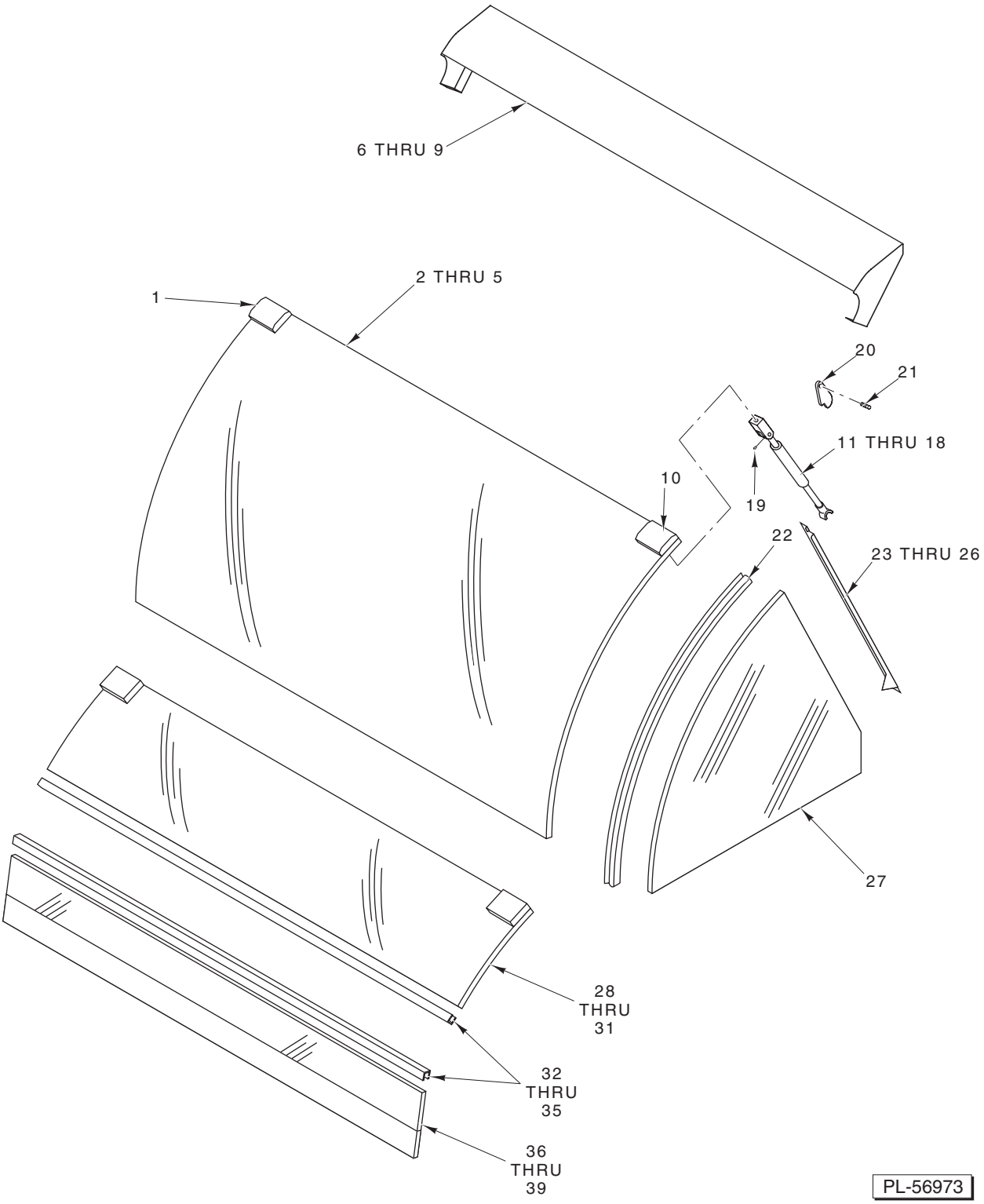

FRONT AND SIDE GLASS

FRONT AND SIDE GLASS

ILLUS. PL-56973	PART NO.	NAME OF PART	AMT.
1	00-877707-00062	Cylinder Lift Mounting Assy. (Right)	1
2	00-877707-00309	Glass – Front (Canopy) (HUV3P & HUV3P/2) (Full Service)	1
3	00-877707-00409	Glass – Front (Canopy) (HUV4P) (Full Service)	1
4	00-877707-00509	Glass – Front (Canopy) (HUV5P) (Full Service)	1
5	00-877707-00709	Glass – Front (Canopy) (HUV7P) (Full Service)	2
6	00-877707-00323	Canopy (HUV3P)	1
7	00-877707-00423	Canopy (HUV4P)	1
8	00-877707-00523	Canopy (HUV5P)	1
9	00-877707-00723	Canopy (HUV7P)	1
10	00-877707-00063	Cylinder Lift Mounting Assy. (Left)	1
11	00-877707-00308	Cylinder – Lift (HUV3P & HUV3P/2) (Full Service)	1
12	00-877707-00408	Cylinder – Lift (HUV4P) (Full Service)	1
13	00-877707-00508	Cylinder – Lift (HUV5P) (Full Service)	2
14	00-877707-00708	Cylinder – Lift (HUV7P) (Full Service)	4
15	00-877707-00316	Cylinder – Lift (HUV3P) (Self Service)	1
16	00-877707-00416	Cylinder – Lift (HUV4P) (Self Service)	1
17	00-877707-00516	Cylinder – Lift (HUV5P) (Self Service)	1
18	00-877707-00616	Cylinder – Lift (HUV3P/2) (Self Service)	1
19	00-357553-00055	Set Screw M9 X 5	1
20	00-877707-00068	Retainer	1
21	00-877707-00065	Hex Set Screw	1
22	00-877707-00036	Strip – Glass Seal (Black Rubber) (Full Service)	AR
23	00-877707-00066	Holder – Side Glass (Left Side)	AR
24	00-877707-00067	Holder – Side Glass (Right Side)	1
25	00-877707-00064	Screw M4 X 6	AR
26	00-357553-00084	Washer	AR
27	00-877707-00035	Glass – Side & Center	AR
28	00-877707-00303	Glass – Front (Top) (HUV3P) (Self Service)	1
29	00-877707-00403	Glass – Front (Top) (HUV4P) (Self Service)	1
30	00-877707-00503	Glass – Front (Top) (HUV5P) (Self Service)	1
31	00-877707-00603	Glass – Front (Top) (HUV3P/2) (Self Service)	1
32	00-877707-00302	Strip – Clear (For Top & Bottom Glass) (HUV3P) (Self Service)	2
33	00-877707-00402	Strip – Clear (For Top & Bottom Glass) (HUV4P) (Self Service)	2
34	00-877707-00502	Strip – Clear (For Top & Bottom Glass) (HUV5P) (Self Service)	2
35	00-877707-00602	Strip – Clear (For Top & Bottom Glass) (HUV3P/2) (Self Service)	2
36	00-877707-00304	Glass – Front (Bottom) (HUV3P) (Self Service)	1
37	00-877707-00404	Glass – Front (Bottom) (HUV4P) (Self Service)	1
38	00-877707-00504	Glass – Front (Bottom) (HUV5P) (Self Service)	1
39	00-877707-00604	Glass – Front (Bottom) (HUV3P/2) (Self Service)	1
	00-877707-00099	Strip – Division (Front Glass) (HUV7P)	1

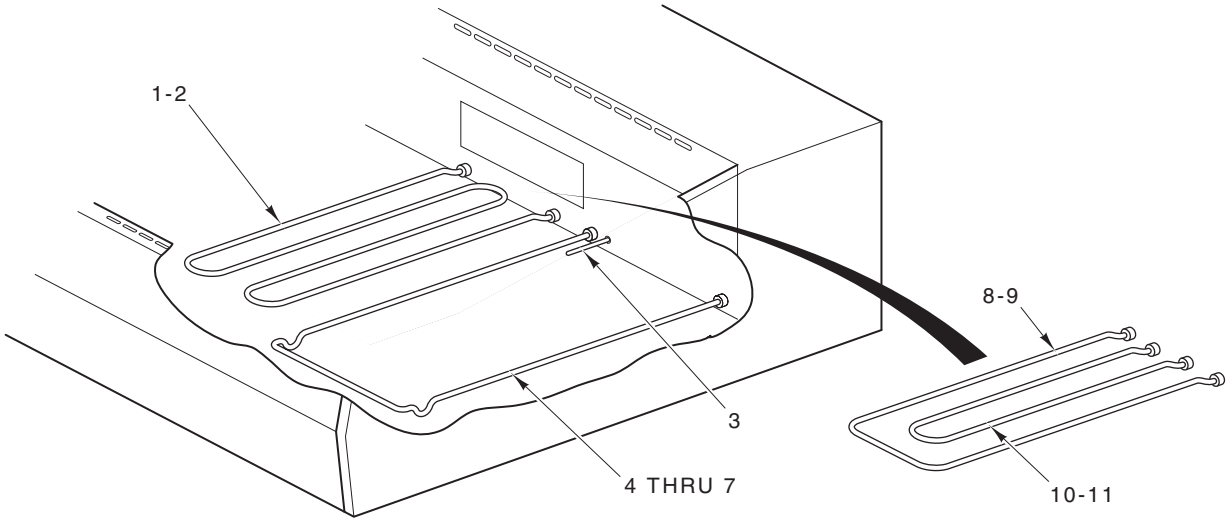

VIEW FROM CASE SIDE

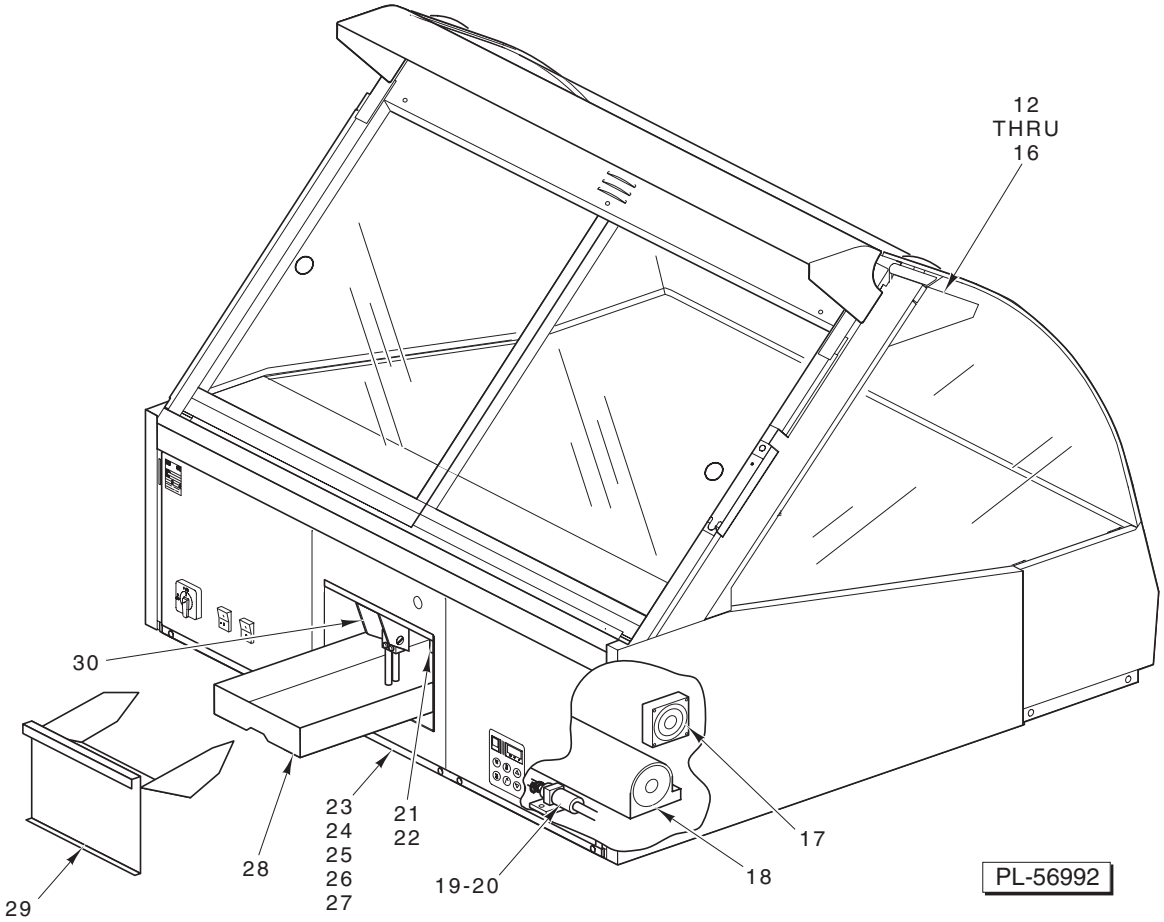

VIEW FROM CONTROL SIDE

HEATING, COOLING, AND HUMIDITY COMPONENTS

HEATING, COOLING, AND HUMIDITY COMPONENTS

ILLUS. PL-56992	PART NO.	NAME OF PART	AMT.
1	00-877707-00007	Element – Humidity (2000 W., 208 V.) (ML-132065, ML-132067, ML-132069, & ML-132071)	1
2	00-877707-00054	Element – Humidity (2000 W., 240 V.) (ML-132065, ML-132067, ML-132069, & ML-132071)	1
3	00-356946	Sensor – Temperature (Air Duct & Element) (Full Service)	2
4	00-877707-00006	Element – Well Heating (1500 W., 208 V.) (All Except ML-132084)	2
5	00-877707-00053	Element – Well Heating (1500 W., 240 V.) (All Except ML-132084)	2
6	00-877707-00094	Element – Well Heating (1100 W., 208 V.) (ML-132084)	4
7	00-877707-00105	Element – Well Heating (1100 W., 240 V.) (ML-132084)	4
8	00-877707-00096	Element – Humidity (600 W., 208 V.) (ML-132080, ML-132081, ML-132082, & ML-132084)	1
9	00-877707-00104	Element – Humidity (600 W., 240 V.) (ML-132080, ML-132081, ML-132082, & ML-132084)	1
10	00-877707-00095	Element – Humidity (300 W., 208 V.) (ML-132080, ML-132081, ML-132082, & ML-132084)	1
11	00-877707-00103	Element – Humidity (300 W., 240 V.) (ML-132080, ML-132081, ML-132082, & ML-132084)	1
12	00-877707-00324	Panel – Heater Light Aray (HUV3P & HUV3P/2 Full Service)	1
13	00-877707-00424	Panel – Heater Light Aray (HUV4P)	1
14	00-877707-00524	Panel – Heater Light Aray (HUV5P)	1
15	00-877707-00624	Panel – Heater Light Aray (HUV3P/2 Self Service)	1
16	00-877707-00724	Panel – Heater Light Aray (HUV7P)	1
17	00-877707-00010	Fan – Cooling (Left, Right, & Top)	AR
18	00-877707-00009	Fan – Well Heater (Left & Right)	AR
19	00-877707-00017	Valve – Water	1
20	00-877707-00052	Restrictor – Water Valve	1
21	00-877707-00069	Coupling & Nut	1
22	00-877707-00070	Water Connection	1
23	00-877707-00071	Frame – Tray Opening (ML-132065, ML-132067, ML-132069, & ML-132071)	1
24	00-877707-00106	Frame – Tray Opening (ML-132080, ML-132081, ML-132082, & ML-132084)	1
25	00-877707-00072	Panel – Element (ML-132065, ML-132067, ML-132069, & ML-132071)	1
26	00-877707-00107	Panel – Element (ML-132080, ML-132081, ML-132082, & ML-132084)	1
27	00-877707-00108	Lid – Panel Element (ML-132080, ML-132081, ML-132082, & ML-132084)	1
28	00-877707-00045	Tray – Humidity	1
29	00-877707-00050	Door – Humidity Tray	1
30	00-877707-00014	Sensor – Water Level	1

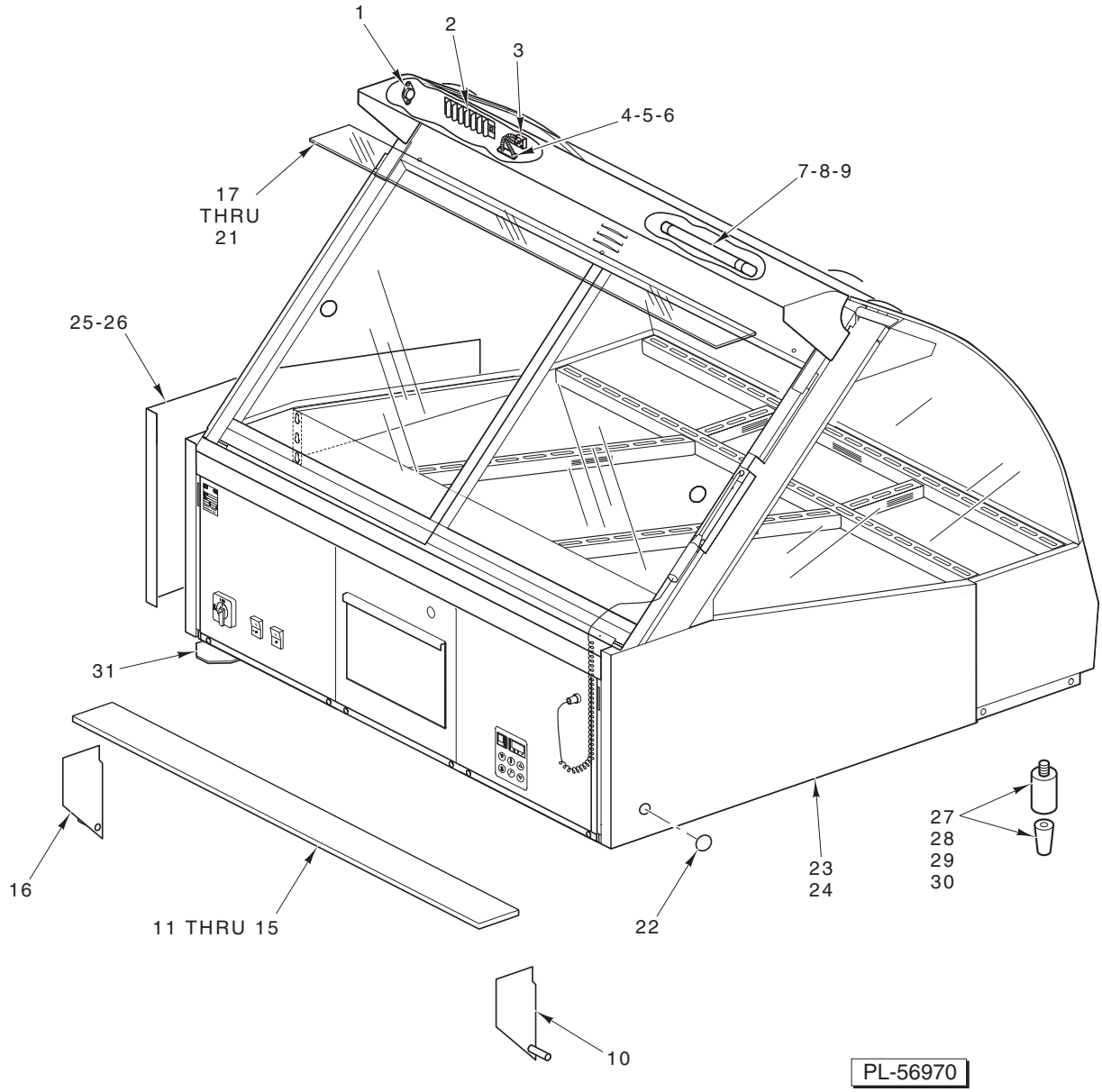

LIGHTS AND CUTTING BOARD

LIGHTS AND CUTTING BOARD

ILLUS. PL-56970	PART NO.	NAME OF PART	AMT.
1	00-877707-00026	Switch – Temperature High Limit	1
2	00-422800-00068	Block – Terminal (6-Position) (For Lights)	AR
3	00-877707-00047	Block – Terminal Ceramic (2-Position)	AR
4	00-877707-00008	Heater – Upper (250 W.) (Ceramic) (ML-132065, ML-132066, ML-132067, ML-132068, ML-132069, ML-132070, & ML-132071)	AR
5	00-877707-00097	Heater – Upper (150 W.) (Ceramic) (ML-132080, ML-132081, ML-132082, & ML-132084)	AR
6	00-877707-00057	Spacer – Well Heater	AR
7	00-877707-00511	Light – Fluorescent (55 W.)	2
8	00-360038	Light – Fluorescent (36 W.)	2
9	00-360039	Socket – Fluorescent Light	2
10	00-877707-00044	Pin – Hinge Bracket (RH)	1
11	00-877707-00311	Board – Cutting (Board Only) (HUV3P)	1
12	00-877707-00411	Board – Cutting (Board Only) (HUV4P)	1
13	00-877707-00512	Board – Cutting (Board Only) (HUV5P)	1
14	00-877707-00612	Board – Cutting (Board Only) (HUV3P/2)	1
15	00-877707-00712	Board – Cutting (Board Only) (HUV7P)	1
16	00-877707-00043	Pin – Hinge Bracket (LH)	1
17	00-877707-00301	Glass – Light (Rose) (HUV3P) (HUV3P/2 Full Service)	1
18	00-877707-00401	Glass – Light (Rose) (HUV4P)	1
19	00-877707-00501	Glass – Light (Rose) (HUV5P)	1
20	00-877707-00601	Glass – Light (Rose) (HUV3P/2 Self Service)	1
21	00-877707-00701	Glass – Light (Rose) (HUV7P)	1
22	00-877707-00073	Plug	1
23	00-877707-00074	Panel – Side (Left Side) (Black)	1
24	00-877707-00075	Panel – Side (Left Side) (White)	1
25	00-877707-00076	Panel – Side (Right Side) (Black)	1
26	00-877707-00077	Panel – Side (Right Side) (White)	1
27	00-877707-00079	Legs	4
28	00-877707-00078	Washer	4
29	00-877707-00080	Bushing (Inside)	4
30	00-877707-00087	Nut	4
31	00-877707-00088	Plate – Switch Protector	1

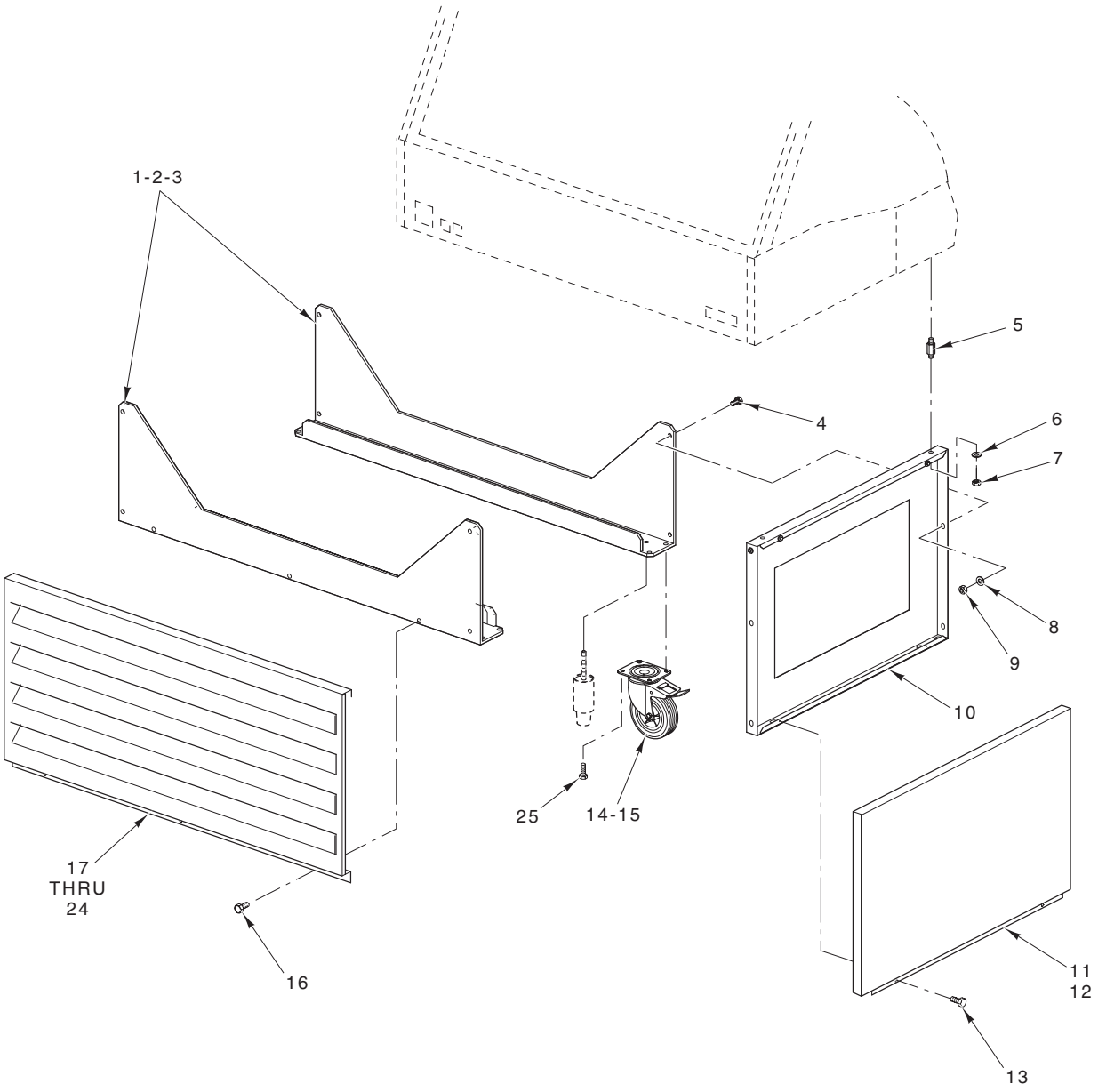

DISPLAY CASE BASE

DISPLAY CASE BASE

ILLUS. PL-57095	PART NO.	NAME OF PART	AMT.
1	00-877707-00325	Frame – Front/Back (HUV3P)	2
2	00-877707-00425	Frame – Front/Back (HUV4P)	2
3	00-877707-00525	Frame – Front/Back (HUV5P)	2
4	00-425900-00165	Screw	AR
5	00-877707-00082	Standoff	4
6	00-422900-00335	Washer	AR
7	00-877707-00081	Nut	AR
8	00-422900-00335	Washer	AR
9	00-877707-00081	Nut	AR
10	00-877707-00084	Frame – Side	2
11	00-877707-00085	Panel – Side (Black)	2
12	00-877707-00086	Panel – Side (White)	2
13	00-357563	Screw	AR
14	00-877707-00091	Caster – Black (With Brake)	2
15	00-877707-00092	Caster – Black (Without Brake)	2
16	00-357563	Screw	AR
17	00-877707-00326	Panels – Front/Back (HUV3P) (Black)	2
18	00-877707-00327	Panels – Front/Back (HUV3P) (White)	2
19	00-877707-00426	Panels – Front/Back (HUV4P) (Black)	2
20	00-877707-00427	Panels – Front/Back (HUV4P) (White)	2
21	00-877707-00526	Panels – Front/Back (HUV5P) (Black)	2
22	00-877707-00527	Panels – Front/Back (HUV5P) (White)	2
23	00-877707-00726	Panels – Front/Back (HUV7P) (Black)	2
24	00-877707-00727	Panels – Front/Back (HUV7P) (White)	2
25	00-425900-00165	Screw M8 X 16	4