INSTRUCTIONS



HUV DISPLAY CASE

HUV SERIES DELI DISPLAY CASES

MODELS

HUV3P	*ML-132080 (3-PAN, FULL-SERVICE)*
HUV4P	*ML-132081 (4-PAN, FULL-SERVICE)*
HUV5P	*ML-132082 (5-PAN, FULL-SERVICE)*
HUV7P	*ML-132084 (7-PAN, FULL-SERVICE)*

HOBART CORPORATION

701 S. RIDGE AVENUE
TROY, OHIO 45374-0001

937 332-3000

www.hobartcorp.com

FORM 35505 (May 2004)

TABLE OF CONTENTS

GENERAL 3

INSTALLATION 4
- Unpacking 4

ASSEMBLY 5
- Installation of the Side and Center Glass Panels 5
- Raise the Front Glass (Customer Side) 5
- Installation of Seal Strips for Front Glass Doors (Model HUV7) 5
- Install the Glass Panels 5
- Installation of the Black Seal Strips 6
- Installation of the Sliding Glass Doors 6
- Installation of Adjustable Frame and Trays 7
- Lower the Front Glass (Customer Side) 7
- Installation of the Cutting Board (Optional) 7
- Installation of the Base (Optional) 7
- Installation Codes and Standards 8
- Electrical Connection 8
- For HUV Models Provided With Bases With Casters 9
- Location 9
- Plumbing Connection 10
- Water Quality 10
- Drain Connection 11
- Before First Use 11

OPERATION 12
- Full-Service Deli Display Case & Controls 12
- Power On Display Case (Full-Service) 13
- Automatic Water Level Fill 13
- Temperature Controller (Full-Service) 14
- Programming the Well Temperature (Full-Service) 14
- Memory (Full-Service) 15
- Preheat (Full-Service) 15
- Loading Food Product into the Display Case 15

SHUTDOWN 15
- End of the Day 15

CLEANING 16
- End of Day 16
- Monthly 18

MAINTENANCE 19

TROUBLESHOOTING 20
- Full-Service Cases 20

© HOBART CORPORATION, 2004

INSTALLATION, OPERATION AND CARE OF HUV SERIES DELI DISPLAY CASES

SAVE THESE INSTRUCTIONS

GENERAL

The HUV, Hobart Ultra-View, series of deli display cases hold hot food products at regulated temperatures maintaining both freshness and quality. The display cases feature electronic temperature regulation of the well heat and air stream. Quality stainless steel, clear/mirrored tempered glass and 0 to 10 degree adjustable pan frame work together to provide the customer with an Ultra-View of hot deli products.

- Full-Service cases include adjustment of humidity.
- Combinations of HUV cases can be placed next to each other to provide a variety of pan configurations.
- Display cases accept all standard size pans.
- As options, the display case can be mounted on a base and / or can be equipped with a cutting board.

Proper installation, usage, and maintenance of your deli display case is important. Please read this entire manual and carefully follow all of the instructions provided.

INSTALLATION

Before installing, check the electrical service to make sure it agrees with the specifications on the machine data plate, located on the operator side of the display case.

UNPACKING

Immediately after unpacking the deli display case, check for possible shipping damage. If the deli display case is found to be damaged, save the packaging material and contact the carrier within 15 days of delivery.

Remove all vinyl paper from the stainless steel surfaces of the display case and any tape from the glass and steel surfaces.

Unpack the parts that need to be assembled:

	HUV3P Full-Service	HUV4P Full-Service	HUV5P Full-Service	HUV7P Full-Service
Parts shipped inside the unit and packed separately				
Center divider glass panel	N/A	N/A	N/A	N/A
Side glass panels	2	2	2	2
Black glass seal strips	2	2	2	2
Sliding doors	2	2	2	4
Long divider bars	2	3	4	6
Short divider bars	3	4	5	7
Seal Strip (transparent)	N/A	N/A	N/A	1
Parts shipped separately (optional)				
Painted Base Assembly (assembly instructions included)	1	1	1	1
Cutting Board Assembly	1	1	1	1

ASSEMBLY

INSTALLATION OF THE SIDE AND CENTER GLASS PANELS

CAUTION: Handle glass panels with care to avoid breakage. The side and center glass panels are tempered safety glass. If the edges of the glass panels scrape against stainless steel, concrete or other hard surfaces, breakage may occur.

NOTE: Proper installation of the glass seal strips on full-service cases is important to maintain proper heat and humidity levels inside the case.

RAISE THE FRONT GLASS (CUSTOMER SIDE)

- Raise the front glass (customer side). The door is easier to open when held on the corner and pulled up. Glass stays up by itself.

INSTALLATION OF SEAL STRIPS FOR FRONT GLASS DOORS (Model HUV7)

A transparent seal strip must be installed between the two front glass panels on the customer side on model HUV7P. Place the seal strip on the left piece of glass (Fig. 1) such that the flap rests on the right piece of front glass (Fig. 1). The seal strip closes the gap between the two glass panels.

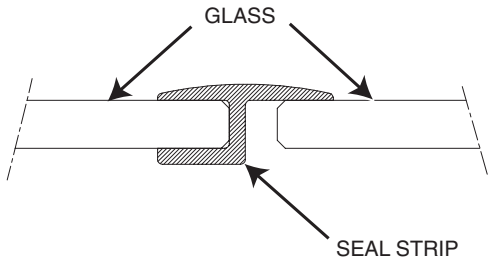

Fig. 1

INSTALL THE GLASS PANELS

1. Position the side of glass panel in the groove on the LEFT side of the case (Fig. 2).
2. Carefully slide the side glass panel toward the rear (operator side) of the display case taking care to avoid breakage.
3. Ensure the side glass is completely seated and held in place by the angled track in the rear of the case.
4. Repeat steps 1 through 3 for the RIGHT side of the case.

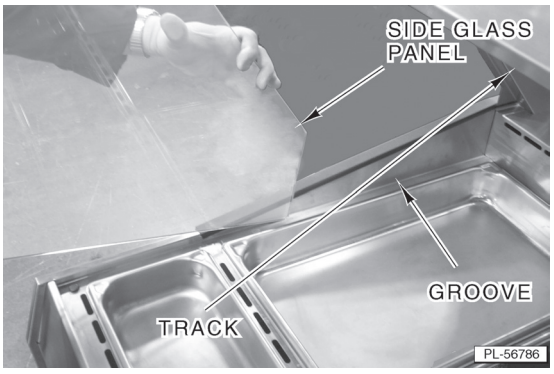

Fig. 2

INSTALLATION OF THE BLACK SEAL STRIPS

NOTE: The black rubber strips seal the side glass to the front glass. They are necessary to hold humidity and heat in the full-service case. It is important that the lip of the rubber seal strip faces toward the inside of the case (Fig. 3).

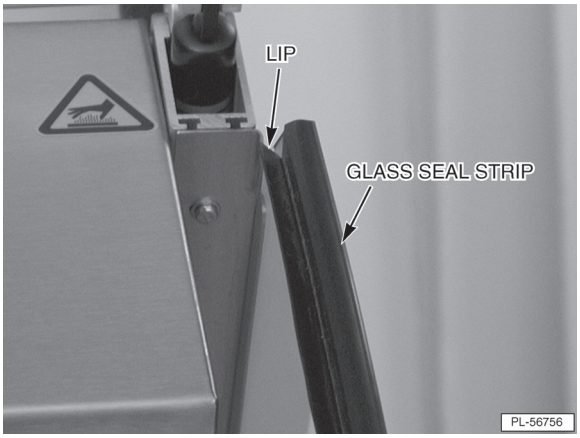

Fig. 3

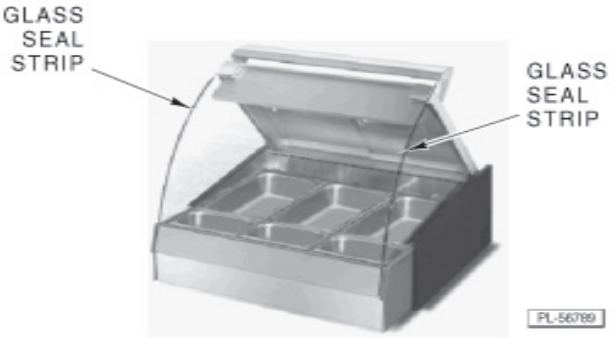

Fig. 4

- **<u>Full-Service case:</u>** Install the black glass seal strip on the LEFT side and RIGHT glass panels. Make sure the lip of the glass seal strips faces toward the inside of the case (Fig. 4).

INSTALLATION OF THE SLIDING GLASS DOORS

1. Insert the top of either door in the top inner track (Fig. 5).

2. Place the bottom of the first door onto the bottom inner track.

3. Insert the top of the second door in the top outer track.

4. Place the bottom of the second door onto the bottom outer track.



Fig. 5

INSTALLATION OF ADJUSTABLE FRAME AND TRAYS

1. Adjust the back wall support to the 0, 5 or 10 degree position (Fig. 6).

2. Adjust the side wall support to the same 0, 5 or 10 degree position on LEFT side of the unit (Fig. 6).

3. Adjust the side wall support to the same 0, 5 or 10 degree position on RIGHT side of the unit (Fig. 6).

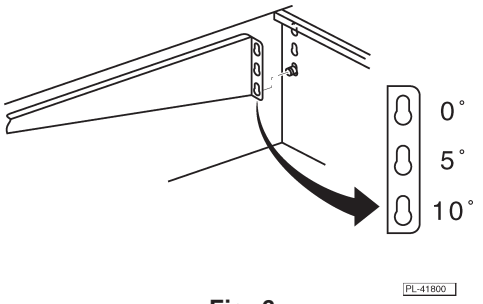

Fig. 6

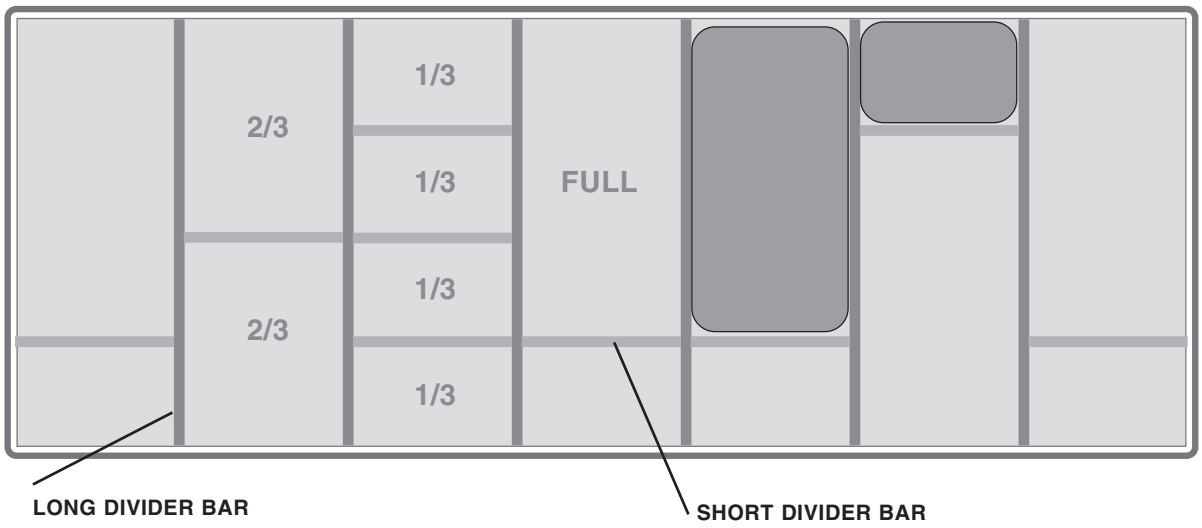

Fig. 7

4. Install the long divider bars front to rear (Fig. 7).
5. Install the short divider bars side to side (Fig. 7).
6. Install the pans between the divider bars (Fig. 7).

LOWER THE FRONT GLASS (CUSTOMER SIDE)

- Lower the front glass (customer side).
- For model HUV7P, the glass panel without the seal strip must be lowered first.

INSTALLATION OF THE CUTTING BOARD (OPTIONAL)

1. Assemble the cutting board onto the display case using the instructions provided with the cutting board assembly.

INSTALLATION OF THE BASE (OPTIONAL)

1. Assemble the base using the instructions provided with the base assembly.

INSTALLATION CODES AND STANDARDS

In the United States, HUV series display cases must be installed according to the following codes: 1) State and local codes, and 2) National Electric Code, ANSI/NFPA 70 (latest edition). Copies may be obtained from the National Fire Protection Association, Batterymarch Park, Quincy, MA 02269.

In Canada, HUV series display cases must be installed according to the following codes: 1) Local codes, and 2) Canadian Electric Code, CSA C22.1 (latest edition) available from the Canadian Standard Association, 5060 Spectrum Way, Suite 100, Mississauga, Ontario, Canada L4W 5N6.

ELECTRICAL CONNECTION

WARNING: ELECTRICAL AND GROUNDING CONNECTIONS MUST COMPLY WITH THE APPLICABLE PORTIONS OF THE NATIONAL ELECTRICAL CODE AND/OR OTHER LOCAL ELECTRICAL CODES.

ELECTRICAL DATA

Model	Type	Volts	Hertz	Phase	Amps
HUV3P	Full-Service	208	60	1	20.6
		208	60	3	12.2
HUV4P	Full-Service	208	60	1	21.5
		208	60	3	12.7
HUV5P	Full-Service	208	60	1	22.1
		208	60	3	13.4
HUV7P	Full-Service	208	60	1	29.5
		208	60	3	17.9
		240	60	1	28.2
		240	60	3	17.1

FOR HUV MODELS PROVIDED WITH BASES WITH CASTERS (Fig. 8)

Safety regulations require that, when this appliance is properly connected to the electrical power supply using flexible conduit, adequate means must be provided to limit movement of the appliance without depending on or transmitting stress to the electrical conduit. This means that, as part of the installation, the base must be secured to the building structure (typically either wall or floor) to limit the movement of the appliance and, thus, helping to prevent damage to the conduit during cleaning, maintenance and service operations.

A hole in the frame of the base (below the field connection box, Fig. 8) is provided for attachment of a tether (locally supplied chain, cable, etc.). The other end of the tether is to be secured to an anchoring point in the building structure. **NOTE**: The length of the tether must be shorter than the length of the flexible conduit to make sure that no stress is transmitted to the conduit during appliance movement.

Following installation, check to confirm that, when the appliance is moved to the limits of the tether in each direction, no stress is transmitted to the electrical conduit.

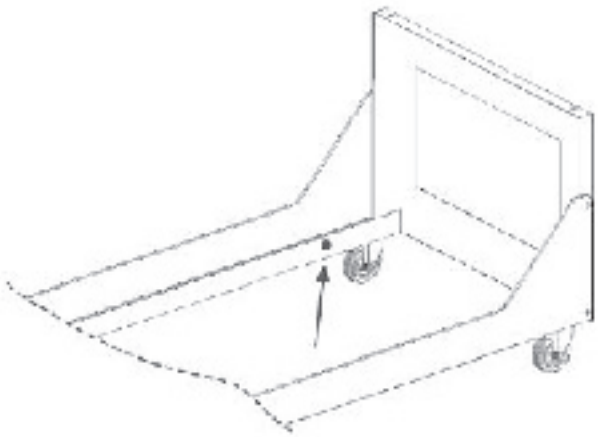

Fig. 8

LOCATION

The installation location must allow adequate clearances for servicing and for proper operation.

PLUMBING CONNECTION

Water Supply Connection

WARNING: PLUMBING CONNECTIONS MUST COMPLY WITH APPLICABLE SANITARY, SAFETY AND PLUMBING CODES.

1. Connect the water supply to the 1/2 inch barbed-type tubing fitting (Fig. 9) using flexible tubing and a suitable hose clamp. Alternatively, remove the barbed tubing fitting and connect the water supply to the 3/4 inch NSHT (National Straight Hose Thread) inlet (Fig. 10).
2. A manual shutoff valve should be provided convenient to the display case. This valve should be open when the display case is in operation.
3. Water pressure should be 20 to 60 psi. If pressure is in excess of 60 psi, a pressure reducing valve must be installed.

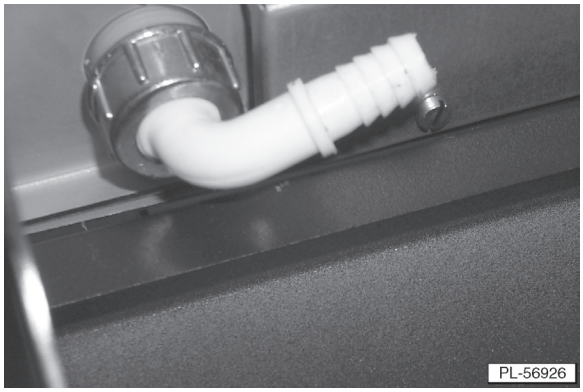

Fig. 9



Fig. 10

WATER QUALITY

Water supplies vary from one location to another. A local water treatment specialist should be consulted and the water supply should be analyzed to make sure specifications are met before installing the display case.

WATER SUPPLY SPECIFICATIONS

Supply Pressure	20 to 60 psi
Hardness	2 to 4 grains per gallon
Chlorides	Less than 30 ppm
Total Dissolved Solids	60 ppm
PH Range	7 to 8

Untreated water contains scale-producing minerals which can build up on the water level sensor probe and the humidity tray. Excess lime scale build up on water level sensor probes will cause an error in the automatic water fill and the humidity tray may not fill with water.

The water-level sensor in the display case uses ions in the water to detect the water level. Do not use distilled (fully de-mineralized or de-ionized) water. This could provide a false reading to the sensors and overflow the humidity tray.

DRAIN CONNECTION

CAUTION: In order to avoid any back pressure in the display case, do not connect solidly to any drain connection.

1. Connect 1/2 inch I.D. plastic tubing with a suitable hose clamp to the overflow outlet located on the underside of the display case (Fig. 11).

   Run the drain tube to an open gap type drain (maximum of 5 to 10 feet away). The drain tubing must have appropriate support along its length. The drain line from the display case must not be combined with any drain line from another device.

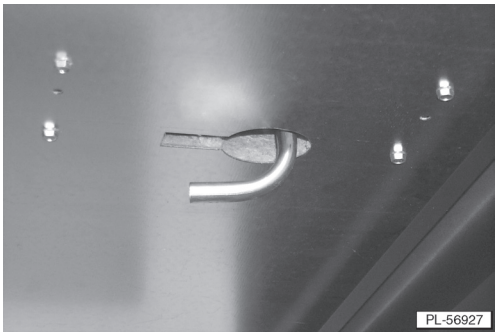

Fig. 11

BEFORE FIRST USE

WARNING: DISCONNECT THE ELECTRICAL POWER TO THE MACHINE AND FOLLOW LOCKOUT / TAGOUT PROCEDURES.

The display cases must be burned-in to release any odors that might result from heating the new display case surfaces.

1. Clean, sanitize, rinse and wipe dry the display case and all its parts and accessories both inside and outside. Refer to Cleaning for further instructions.
2. Fill the humidity tray. Refer to Operation for further instructions.
3. Operate the display case at maximum temperature settings for 30 minutes. Smoke, with an unpleasant odor, will normally be given off during this burn-in period.

OPERATION

WARNING: THE DELI DISPLAY CASE AND ITS PARTS ARE HOT. USE CARE WHEN OPERATING, CLEANING OR SERVICING THE DELI DISPLAY CASE.

FULL-SERVICE DELI DISPLAY CASE & CONTROLS

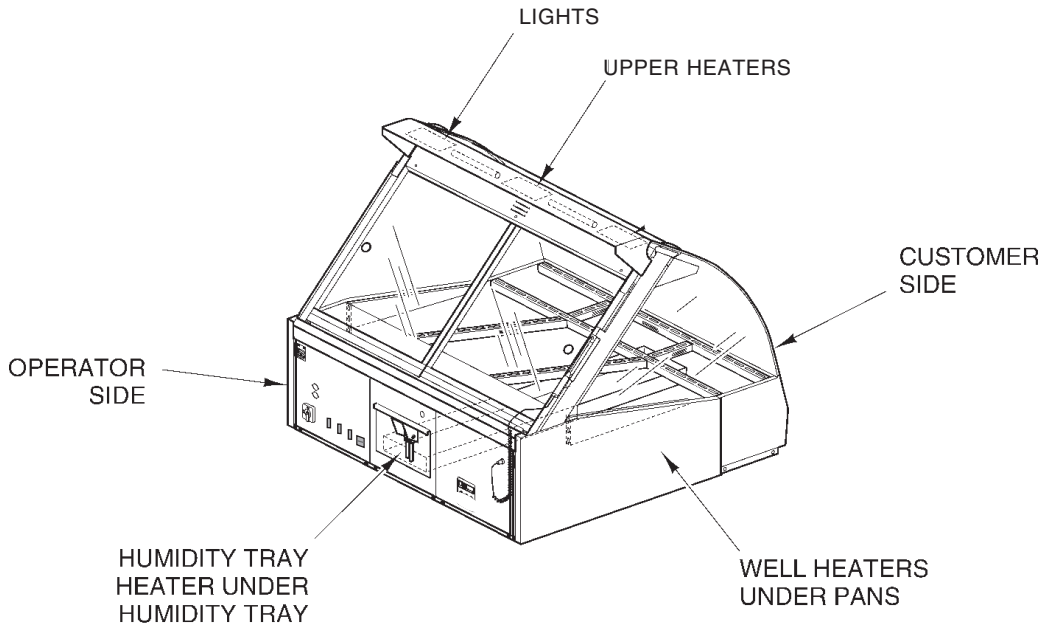

Fig. 12

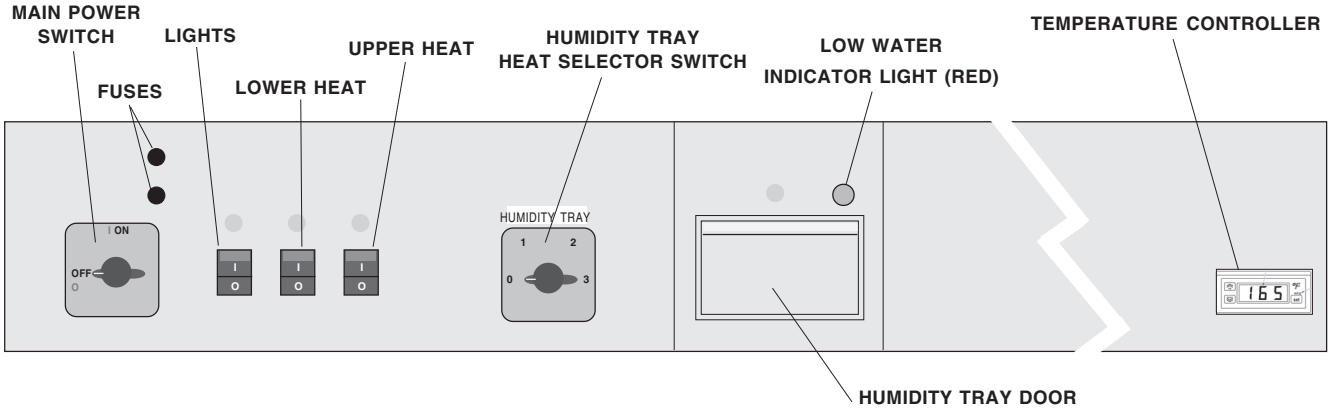

Fig. 13

POWER ON DISPLAY CASE (FULL-SERVICE) (Figs. 12, 13)

1. Turn on the water supply valve, external to the display case.
2. Turn the Main Power Switch to the on position.
3. Turn the Light switch on.
4. Turn the Lower & Upper Heat switches on. The controller will blink during power-up. Set temperature control for the lower well-temperature heat setting.
5. Turn the Humidity Tray Heat selector switch to the desired setting:

O = Off
1 = Lo Humidity
2 = Med Humidity
3 = High Humidity

AUTOMATIC WATER LEVEL FILL

1. The humidity tray will **automatically** fill with water on power-up and the red humidity tray empty indicator light will turn off. During the day, the red humidity tray empty indicator light will cycle on and off as the unit **automatically** fills with water as needed.

NOTE: The humidity tray will evaporate approximately 1 quart of water per hour at a humidity tray setting of 3.

2. The humidity tray door should remain closed during operation (Fig. 14).

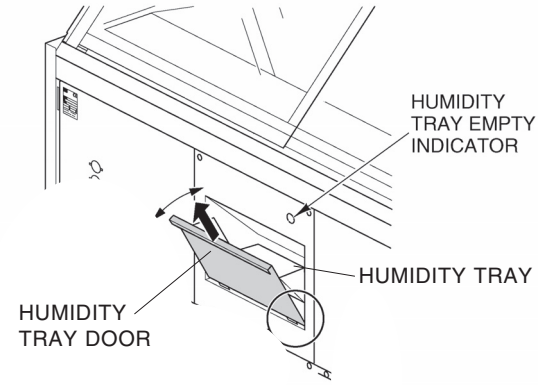

Fig. 14

TEMPERATURE CONTROLLER (Full-Service, Fig. 15)

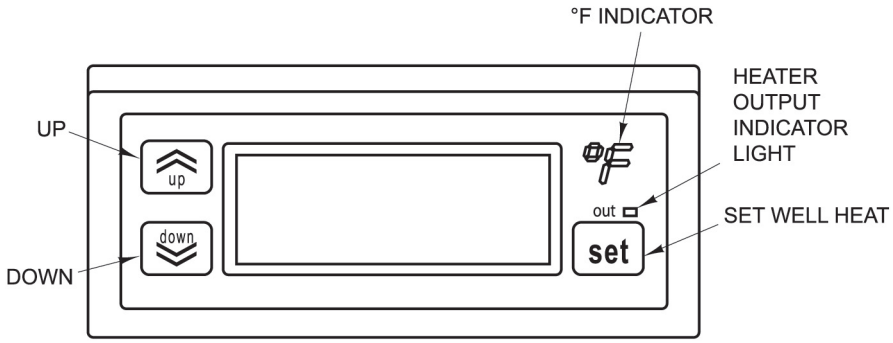

Fig. 15

PROGRAMMING THE WELL TEMPERATURE (Full-Service)

1. Press set key (Fig. 16).

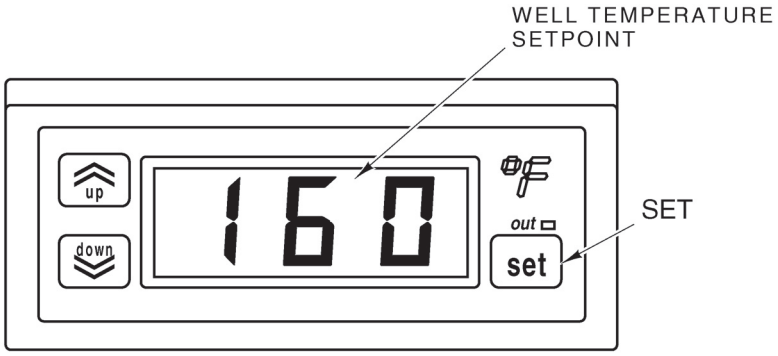

Fig. 16

- Display shows the well temperature set point.

2. Quickly press the up or down arrow key to select the desired well temperture (149°F to 185°F).

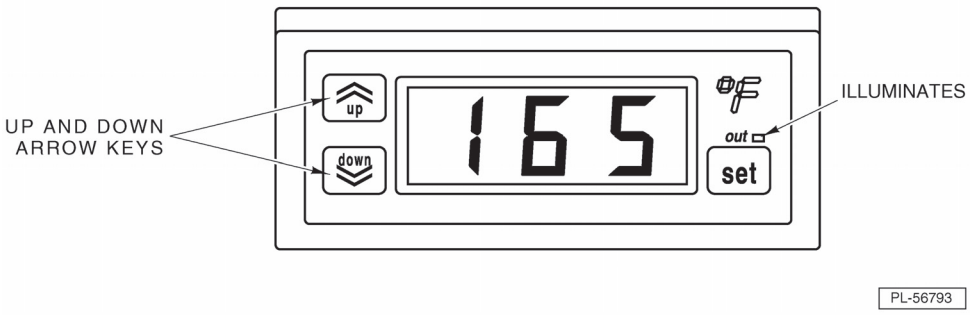

Fig. 17

- After 3 seconds, the actual well temperature (not set point) is displayed.
- The heater output indicator will light as the unit preheats (Fig. 17).

MEMORY (Full-Service)

The display case is now programmed with its setting stored in memory. The programmed setting is remembered after a power-down and remains in memory until changed again by the operator.

PREHEAT (Full-Service)

1. Allow the case to preheat 30 to 60 minutes. All doors must be closed in order for unit to preheat properly.
2. Verify that the display case is at the proper temperature. Case temperature is displayed as shown (Fig. 18).

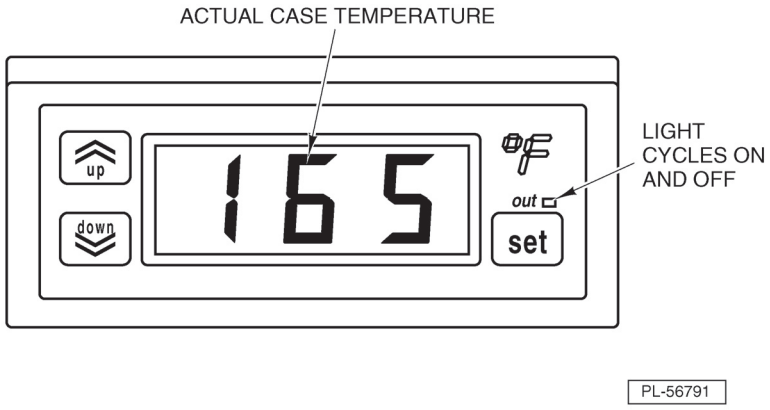

Fig. 18

- During normal operation, you will see the heater output indicator turn on and off as the heaters cycle (Fig. 18).

LOADING FOOD PRODUCT INTO THE DISPLAY CASE

1. Open sliding glass door.
2. Load packaged food into display case.
3. Close sliding glass door. Sliding glass doors should remain closed when case is not being loaded.

SHUTDOWN

END OF THE DAY

1. Turn off the heat switches.
2. Turn off the light switch.
3. Turn the main power switch to the off position.

CLEANING

WARNING: THE DELI DISPLAY CASE AND ITS PARTS ARE HOT. USE CARE WHEN OPERATING, CLEANING OR SERVICING THE DELI DISPLAY CASE.

WARNING: DISCONNECT THE ELECTRICAL POWER TO THE MACHINE AND FOLLOW LOCKOUT / TAGOUT PROCEDURES.

CAUTION: Do not clean with oven cleaners. Do not clean with a high-pressure hose.

END OF DAY

Cleaning the Interior of the Case

1. Raise the front (customer side) glass. Door is easier to open when held on corner and pulled up. Glass stays up on its own. For model HUV7P when opening the front glass panels, the glass on which the seal strip is installed must be raised first.

2. Remove pans. Remove back wall support, side wall supports and divider bars if necessary. Wash with warm soapy water, rinse, sanitize and dry with soft clean cloth; or wash in commercial dishwasher.

3. Clean interior stainless steel surfaces with warm soapy water, rinse and wipe dry with a soft cloth.

Cleaning the Glass

1. Remove clear glass protector strips from sliding glass doors, (all models). For model HUV7P, remove the transparent seal strip from the front glass panel.

2. Remove black rubber glass seal strips from left, right (and center) side glass panels.

3. Clean door glass handles with warm soapy water, rinse and dry. Clean seal strips in warm water, rinse and dry.

4. Clean all glass surfaces with warm soapy water, rinse and dry, or use a commercial glass cleaner.

CAUTION: Do not use a scouring pad or abrasives on glass. Damage to the reflective coating will result.

5. Replace clear glass protector strips.

NOTE: It is important that the clear glass protector strips are put on. They help to protect the sliding glass doors from damage.

- Install clear glass protector strips onto each sliding glass door (Fig. 19), (all models).

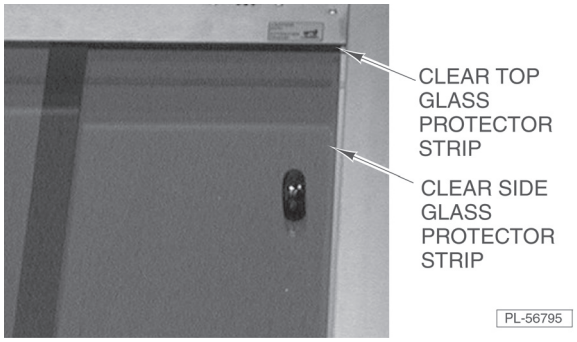

Fig. 19

- For model HUV7P, install the transparent seal strip on the left piece of front glass such that the flap rests on the right piece of front glass (Fig. 20).

7. Install black rubber glass seal strips onto side/center glass panels. Make sure the lip of the glass seal strips face toward the inside of case. Refer to assembly section of this manual.

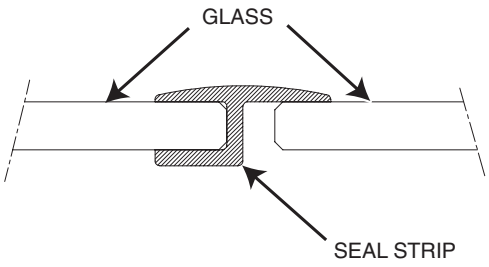

Fig. 20

NOTE: The black rubber strips seal the side glass to the front glass. They are necessary to hold humidity and heat in the full-service case.

Cleaning the Exterior of the Case

1. Clean the control panel with a spong or clean soft cloth.

CAUTION: Excessive water and harsh cleaners will damage the control panel.

2. Clean the exterior of the display case with warm soapy water and a soft cloth or sponge. Rinse thoroughly and wipe dry with a soft clean cloth.

Re-Assembly of the Adjustable Frame and Tray

1. Replace pans. Replace back wall support, sidewall supports and divider bars. Refer to Installation of Adjustable Frame and Trays on page 7.

2. Lower the front glass (customer side).

Guidelines for Maintaining Stainless Steel Surfaces

There are four basic things that can break down the surface layer of stainless steel and allow corrosion to develop: 1) Abrasion, 2) Deposits, 3) Water and 4) Chlorides.

Avoid abrasion from rubbing with steel pads, wire brushes or scrapers that can leave iron deposits on stainless steel; instead, use plastic scouring pads or soft cloths. For stubborn stains, use products such as Cameo, Talc or Zud First Impression. Always rub parallel to the polish lines or with the grain.

Hard water can leave deposits that promote rust on stainless steel. Treated water from softeners or certain filters can eliminate these mineral deposits. Deposits from food must be properly removed by cleaning. Use mild detergent and nonchloride cleaners. Rinse thoroughly. Wipe dry. If using chloride-containing cleaners or sanitizers, *rinse repeatedly* to avoid stainless steel corrosion. Where appropriate, apply a polish recommended for stainless steel (such as Benefit or Super Sheen) for extra protection and luster.

MONTHLY

Humidity Tray (Full-Service Case)

De-Liming the Water Level Sensor Probes

1. Follow shutdown procedures and allow unit to cool.
2. Open humidity tray door (Fig. 21).
3. Spray a de-liming agent onto the water level sensor probes once a month (Fig. 22) (or more often if needed) to avoid scale build up. Then, remove scale with a non-abrasive scouring pad.

De-Liming the Humidity Tray

1. Follow shutdown procedures and allow unit to cool.
2. Open humidity tray door (Fig. 21).
3. Remove humidity tray drawer.
4. Remove humidity tray.
5. De-lime humidity tray with de-liming agent.
6. Replace humidity tray and ensure that the water level probes are in their proper vertical position.
7. Replace humidity tray door.

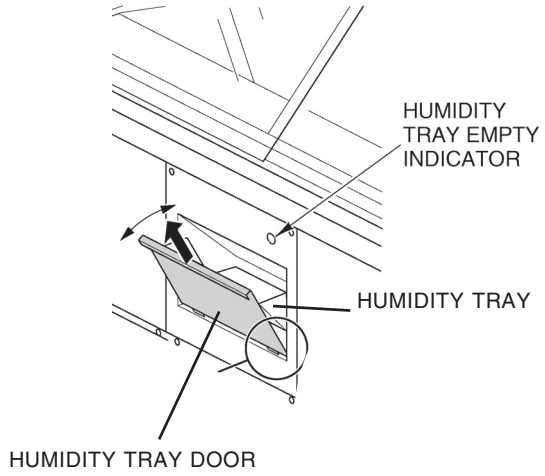

Fig. 21

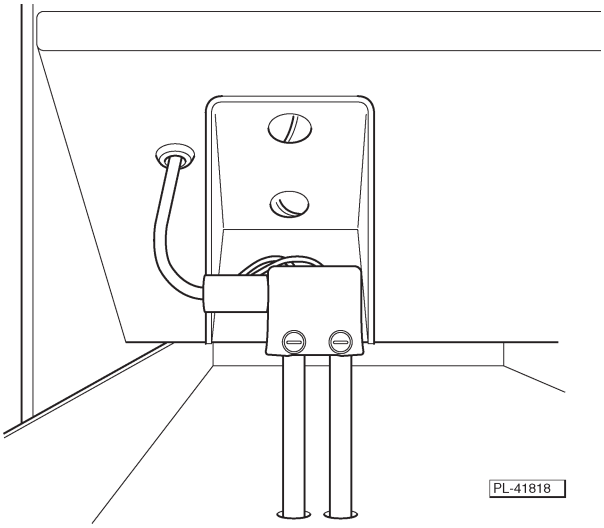

Fig. 22

MAINTENANCE

WARNING: DISCONNECT THE ELECTRICAL POWER TO THE MACHINE AND FOLLOW LOCKOUT / TAGOUT PROCEDURES.

WARNING: THE DELI DISPLAY CASE AND ITS PARTS ARE HOT. USE CARE WHEN OPERATING, CLEANING OR SERVICING THE DELI DISPLAY CASE.

Service Parts and Information

Contact your local Hobart service office for any repairs or adjustments needed on this equipment. Long-term service contracts are available on this and other Hobart products.

TROUBLESHOOTING

FULL-SERVICE CASES (Models HUV3P, HUV4P, HUV5P, HUV7P)

Problem	Possible Cause
Will not operate (controller is blank)	1. Check incoming power. 2. Check fuses. 3. Turn the Main Power Switch on. 4. Turn the Heater switch on. 5. Call Hobart Service.
Controller displays --- or EEE	Call Hobart Service.
No well heat	1. Check incoming power. 2. Check fuses. 3. Turn the Main Power Switch on. 4. Turn the Heater switch on. 5. Call Hobart Service.
No upper heat	Call Hobart Service.
No humidity, red light on (humidity tray empty)	1. Make sure external water valve is turned on, then turn Main Power Switch off then on again. 2. Water level probe is stuck, pivot water level probe to its vertical position, then turn main power switch off then on again. 3. Water level probes are coated with lime. Delime probes, then turn Main Power Switch off then on again. 4. Distilled (fully de-mineralized or de-ionized) water is being used. Ensure water quality meets specifications. 5. Incoming water pressure too low. 6. Call Hobart Service.
No humidity, red light off (humidity tray full)	1. Humidity is off, set on O. Turn selector switch to 1, 2 or 3. 2. Call Hobart Service.
Humidity tray continuous overflow and/or water leaking out of machine	1. Turn off external water valve, then call Hobart Service.
Lights not on (controller functioning)	1. Turn the Light switch on. 2. Call Hobart Service.
Well temperature not reached within one hour	1. Door(s) open. 2. Pans not in place. 3. Black glass seal strips not in place on side glass. 4. Call Hobart Service.