HOBART

CATALOG OF REPLACEMENT PARTS

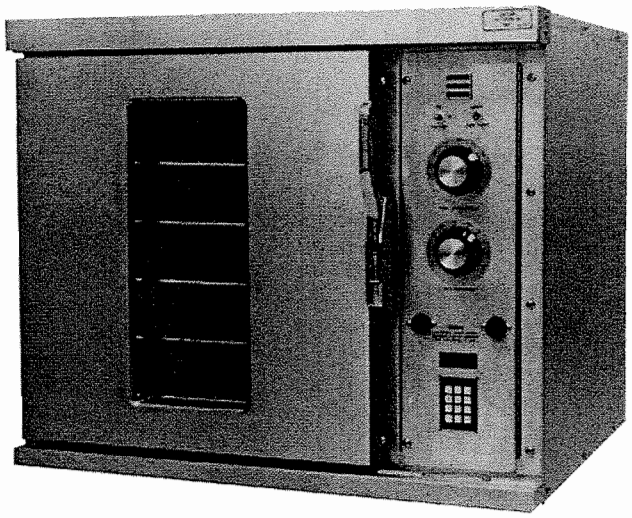

HALF-SIZE CONVECTION OVENS

CN86

ML-43729

A product of HOBART CORPORATION TROY, OHIO 45374

FORM 16889 (8-88)

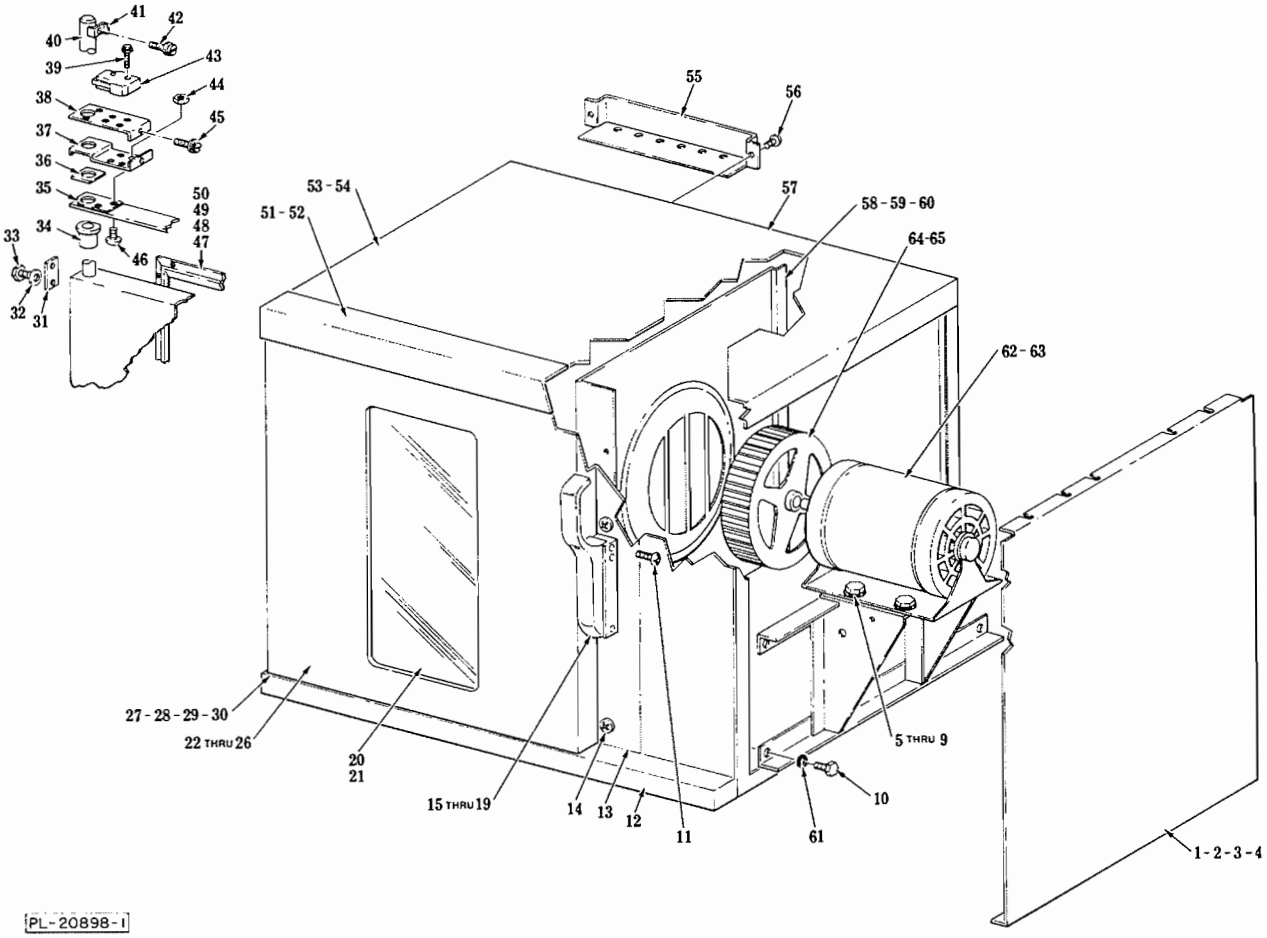

CABINET AND DOORS

CABINET AND DOORS

ILLUS. PL-20898-1	PART NO.	NAME OF PART[32]	AMT.
1	347594-1	Side Panel - R.H. (Painted)	1
2	347594-2	Side Panel - L.H. (Painted)	1
3	347594-3	Side Panel - R.H. (SST)	1
4	347594-4	Side Panel - L.H. (SST)	1
5	SC-116-84	Cap Screw 5/16-18 x 1⅛ Hex Hd	4
6	WS-29-46	Washer	8
7	NS-46-86	Nut & Lock Washer Assy. 5/16-18 Hex "Keps"	4
8	354564-1	Spacer - Insulating	2
9	346217-1	Washer - Rubber	8
10	SC-113-78	Cap Screw ¼-20 x ¾ Hex Hd	4
11	SC-117-60	Mach. Screw 10-32 x 1¼ Phil. Oval Hd	3
12	347517-1	Lower Cover	1
13	353692-1	Door Jamb Assy	1
14	SD-34-22	Self-Tapping Screw 10-16 x ⅝ Phil. Truss Hd., Type AB	AR
15	353721-1	Latch	1
16	353939-1	Fastener	2
17	SC-114-99	Mach. Screw 10-32 x ½ Phil. Flat Hd	2
18	353683-1	Support - Latch	1
19	SC-115-51	Mach. Screw 10-32 x ½ Phil. Truss Hd	1
20	342129-1	Window	1
21	SD-34-19	Self-Tapping Screw 10-16 x ⅜ Phil. Truss Hd., Type AB	4
22	354859-1	L.H. Door Assy. (W/Window) (Incls. items 20, 21, 24, 26, 28, 31, 32, 33 & 40)	1
23	354859-2	L.H. Door Assy. (W/O Window) (Incls. items 25, 26, 28, 31, 32, 33 & 40)	1
24	347492-3	Inner Door Assy. (W/Window Opening)	1
25	347492-4	Inner Door Assy. (W/O Window Opening)	1
26	SD-34-19	Self-Tapping Screw 10-16 x ⅜ Phil. Truss Hd., Type AB	20
27	347080-2	Bushing	1
28	347598-1	Shaft - Door (Lower)	1
29	WS-29-75	Washer	4
30	353790-1	Stop - Door	1
31	347604-1	Pivot - Retainer	2
32	WL-19-37	Lock Washer ¼ Int. Shakeproof	4
33	SC-113-76	Cap Screw ¼-20 x 1 Hex Hd	4
34	347080-2	Bushing	1
35	353483-1	Plate - Door	1
36	353482-1	Spacer	1
37	353778-1	Support - Switch	1
38	353780-1	Bracket - Switch	1
39	SD-34-47	Self-Tapping Screw 6-32 x 1 Slot. Hex Washer Hd., Type T	2
40	353781-1	Shaft - Door (Upper)	1
41	353784-1	Bracket - Actuator	1
42	SD-36-30	Self-Tapping Screw 8-32 x ¼ Slot. Hex Washer Hd., Type T	1
43	353782-1	Switch - Door	1
44	NS-46-52	Nut & Lock Washer Assy. ¼-20 "Keps"	2
45	SD-36-30	Self-Tapping Screw 8-32 x ¼ Slot. Hex Washer Hd., Type T	1
46	SC-115-62	Mach. Screw ¼-20 x ½ Phil. Truss Hd	2
47	354381-1	Seal - Door (Left Side)	1
48	354382-1	Seal - Door (Right Side)	1
49	354383-1	Seal - Door (Top & Bottom)	2
50	SD-34-5	Self-Tapping Screw 6-20 x ⅜ Phil. Pan Hd., Type AB	16
51	347593-1	Cover - Top	1
52	PB-2-26	Plug Button	1
53	347592-1	Top Assy. (Painted)	1
54	347592-2	Top Assy. (SST)	1
55	347590-1	Vent (Steel)	1
56	SD-34-22	Self-Tapping Screw 10-16 x ⅝ Phil. Truss Hd., type AB	2
57	347581-1	Back Assy. (Painted)	1
58	348230-2	Baffle Assy. (Aluminized Steel)	1
59	348230-4	Baffle Assy. (SST)	1
60	348230-5	Baffle Assy. (Aluminized Steel)	1
61	WL-19-22	Lock Washer ¼ Ext. Shakeproof	4
62	345201-1	Motor (1 Speed)	1
63	342146-5	Motor (2 Speed)	1
64	354526-1	Blower Assy	1
65	SC-113-53	Set Screw 5/16-24 x ⅜ Hex Dr., Cup Pt	2
	353757-1	Door Kit Assy. (Incls. Plug Button and Screws)	1

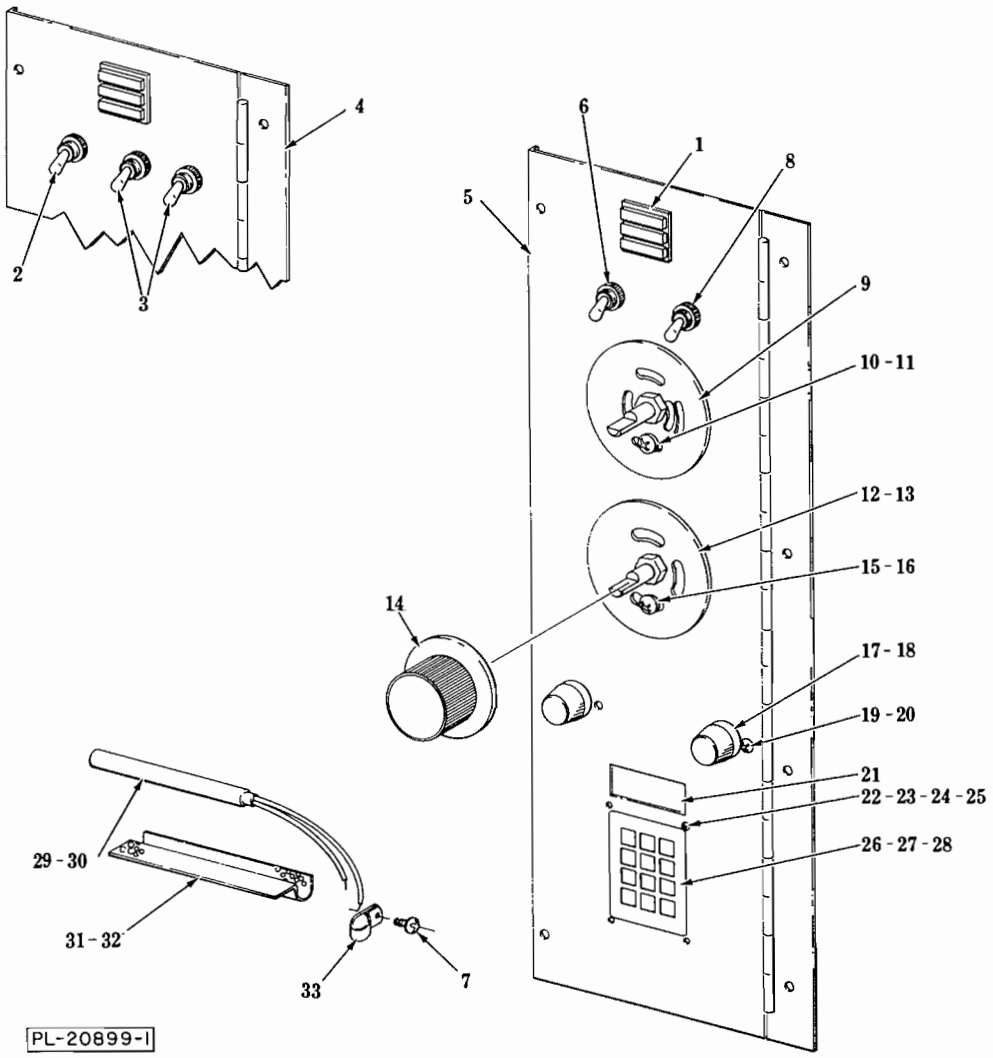

CONTROL PANEL UNIT

CONTROL PANEL UNIT

ILLUS. PL-20899-1	PART NO.	NAME OF PART[32]	AMT.
1	354375-2	Light - Indicator (Power/Heat/Ready)	1
2	340324-11	Switch (4 P.D.T.)	1
3	340324-9	Switch (D.P.D.T.)	2
4	355590-2	Panel - Control (2 Speed Motor)	1
5	355590-1	Panel - Control (1 Speed Motor)	1
6	340324-11	Switch (4 P.D.T.)	1
7	SD-34-22	Self-Tapping Screw 10-16 × 5/8 Phil. Truss Hd., Type AB	1
8	340324-9	Switch (D.P.D.T.)	1
9	353560-1	Plate - Dial - Cook (150°/450°F.)	1
10	SD-34-19	Self-Tapping Screw 10-16 × 3/8 Phil. Truss Hd., Type AB	1
11	WS-29-45	Washer	1
12	354410-1	Controller - Temperature	1
13	354422-1	Plate - Dial - Hold (100°/190°F)	1
14	354208-1	Knob - Control	2
15	SD-34-19	Self-Tapping Screw 10-16 3/8 Phil. Truss Hd., Type AB	1
16	WS-29-45	Washer	1
17	344138-2	Fuse Holder	2
18	FE-19-40	Fuse 300 V., 15A	2
19	SC-114-27	Mach. Screw 8-32 × 1/2 Phil. Pan Hd	4
20	NS-46-51	Mach. Nut 8-32 Hex	4
21	353619-1	Filter	1
22	345967-2	Spacer	4
23	SC-116-86	Mach. Screw 2-56 × 3/4 Phil. Pan Hd	4
24	WL-19-29	Lock Washer 2 Int. Shakeproof	4
25	NS-46-7	Mach. Nut 2-56 Hex	4
26	347618-1	Keyboard	1
27	347619-1	Gasket	1
28	335691-3	P.C. Board Assy	1
29	354319-1	Probe Assy	1
30	342154-2	Plug - Hole	2
31	342132-4	Guard - Bulb	1
32	SD-34-10	Self-Tapping Screw 8-18 × 1/2 Hex Washer Hd., SL Type AB	2
33	78752-12	Clamp 1/4	1

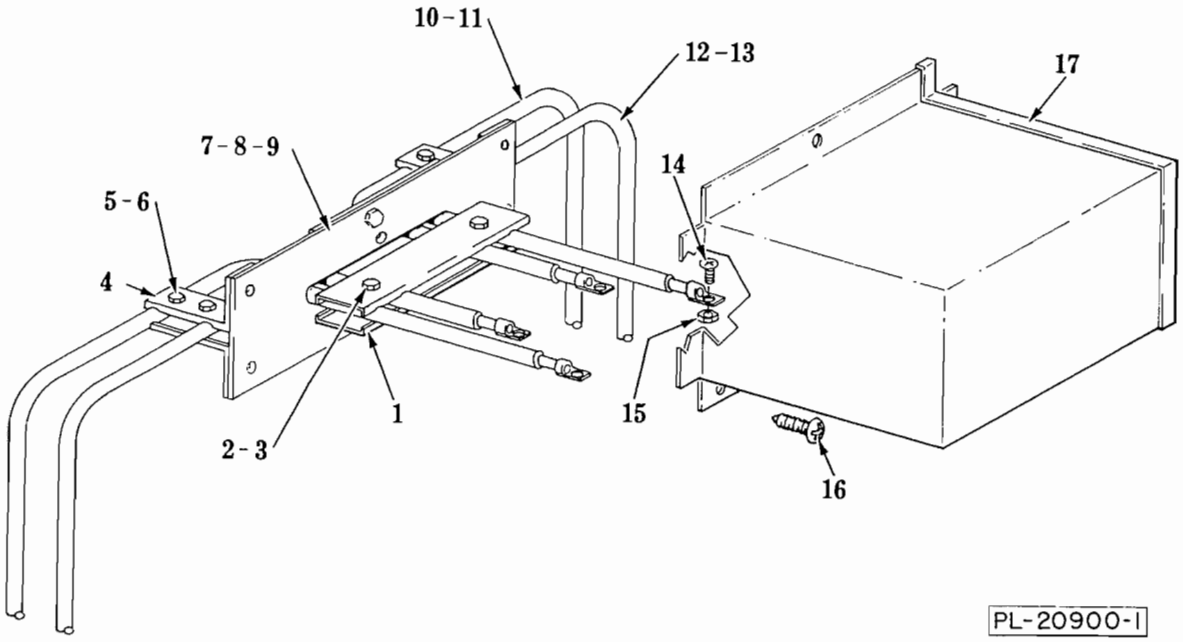

ELECTRIC HEATERS

ILLUS. PL-20900-1	PART NO.	NAME OF PART[32]	AMT.
1	342131-1	Clamp - Large	2
2	SC-114-2	Mach. Screw 10-32 x 3/4 Slot. Hex Washer Hd	2
3	NS-46-88	Nut & Lock Washer Assy. 10-32 "Keps"	2
4	342133-1	Clamp - Small	6
5	SC-114-2	Mach. Screw 10-32 x 3/4 Slot. Hex Washer Hd	6
6	NS-46-88	Nut & Lock Washer Assy 10-32 "Keps"	6
7	347430-1	Seal Plate	1
8	342145-1	Plate	1
9	SD-34-62	Self-Tapping Screw 10-32 x 1/2 Hex Washer Hd., Type T	1
10	351393-2	Heater Unit Assy. (Outer) (208 V.)	1
11	351393-4	Heater Unit Assy. (Outer) (240 V.)	1
12	351393-1	Heater Unit Assy. (Inner) (208 V.)	1
13	351393-3	Heater Unit Assy. (Inner) (240 V.)	1
14	SC-114-3	Mach. Screw 10-32 x 1/2 Slot. Hex Washer Hd	4
15	NS-46-88	Nut & Lock Washer Assy. 10-32 "Keps"	4
16	SD-34-22	Self-Tapping Screw 10 x 5/8 Phil. Truss Hd., Type AB	4
17	347563-1	Tray - Heater Unit	1
	347494-1	Heater Assy. (208 V.) (Incls. items 1 thru 10 & 12)	1
	347494-2	Heater Assy. (240 V.) (Incls. items 1 thru 9, 11 & 13)	1

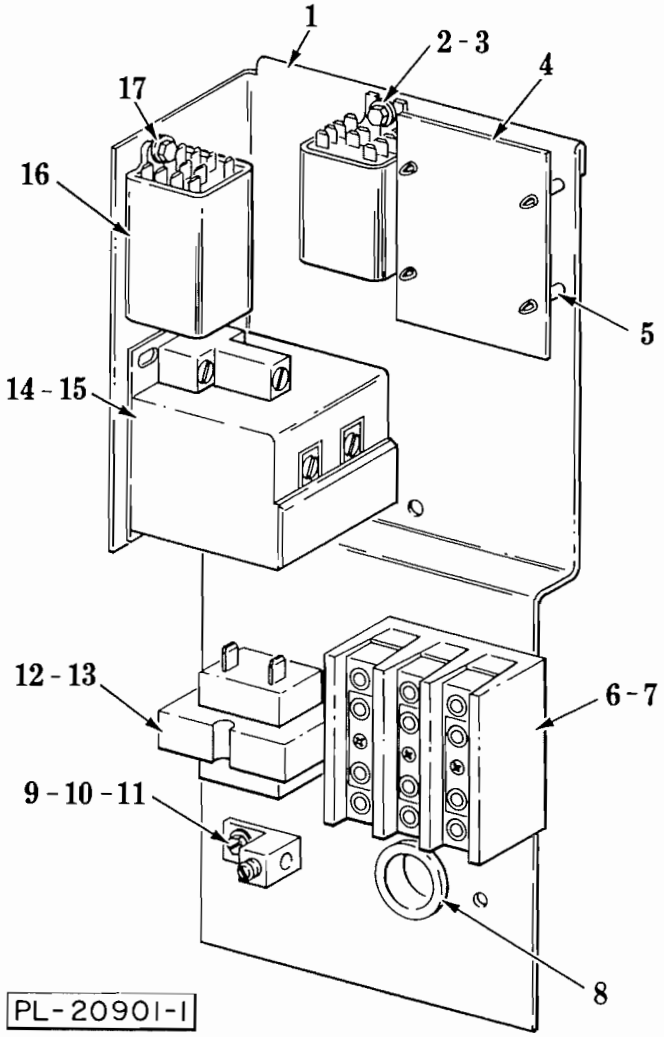

ELECTRICAL COMPONENT PANEL

ILLUS. PL-20901-1	PART NO.	NAME OF PART[32]	AMT.
1	355586-1	Panel - Component	1
2	354723-1	Relay - Time Delay	1
3	SD-34-46	Self-Tapping Screw 6-32 × ½ Hex Washer Hd., Type T	2
4	354409-1	Control - Electronic	1
5	354411-1	Stand-Off	4
6	345504-1	Terminal Block	1
7	SD-34-62	Self-Tapping Screw 10-32 × ½ Hex Washer Hd., Type T	2
8	FE-17-16	Bushing - Electrical	1
9	350700-2	Lug - Terminal	1
10	SD-34-62	Self-Tapping Screw 10-32 × ½ Hex Washer Hd., Type T	1
11	WL-19-21	Lock Washer 10 Ext. Shakeproof	2
12	335653-1	Transformer	1
13	SD-34-62	Self-Tapping Screw 10-32 × ½ Hex Washer Hd., Type T	2
14	354071-1	Relay - Mercury (3 Pole)	1
15	SD-34-62	Self-Tapping Screw 10-32 × ½ Hex Washer Hd., Type T	2
16	354391-3	Relay 3 P.D.T. 11 Amp. (D.C. Coil)	1
17	SD-34-46	Self-Tapping Screw 6-32 × ½ Hex Washer Hd., Type T	2

MISCELLANEOUS

PL-20902	PART NO.	NAME OF PART32	AMT.
	347498-3	Rack Guide (L.H.)	1
	347498-4	Rack Guide (R.H.)	1
	347497-2	Rack	AR
	348164-1	Leg	4
	347757-2	Panel - Bottom (Liner) (SST)	1
	347758-4	Panel - Top Rear (Liner) (SST)	1
	347759-4	Panel - Top Front (Liner) (SST)	1
	347760-2	Panel - Back (Liner) (SST)	1
	347761-2	Panel - Side (Liner) (SST)	1
	343941-2	Caster - 6"	4