INSTRUCTION MANUAL

. . . *with Catalog of Replacement Parts*

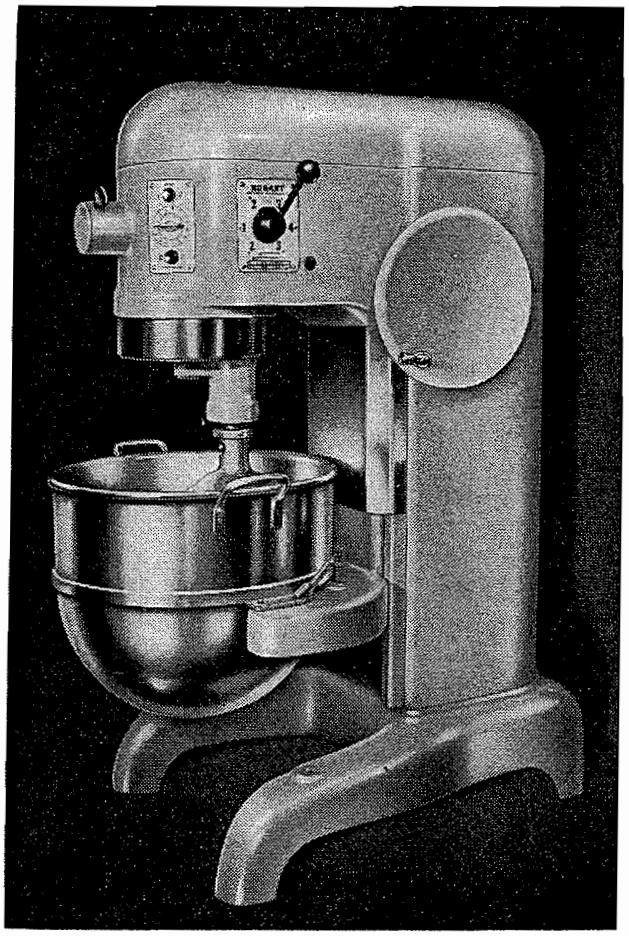

HOBART

MODEL L-800 MIXER

Spec. #6265

THE HOBART MANUFACTURING COMPANY

The World's Oldest and Largest Manufacturer of Computing Scales and Food Store, Kitchen, Bakery and Dishwashing Machines

TROY, OHIO, U.S.A.

FORM 6060-G (Revised Dec. 1963) (Supersedes Form 6060-F, Oct. 1963)

- THIS PAGE INTENTIONALLY LEFT BLANK -

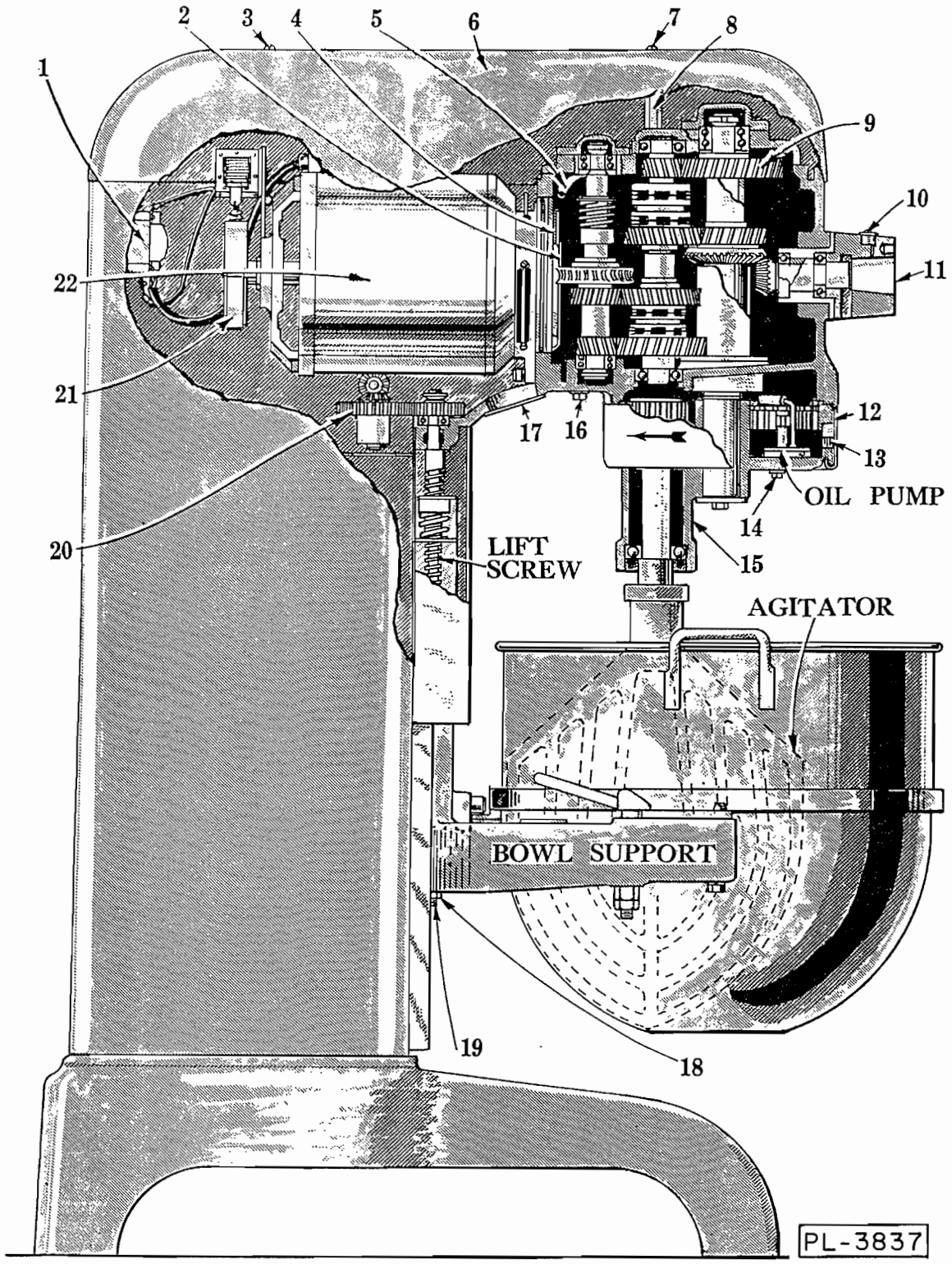
1
2
3
4
5
6
7
8
9
10
11
12
13
14
15
16
17
18
19
20
21
22
OIL PUMP
LIFT SCREW
AGITATOR
BOWL SUPPORT
PL-3837

FIG. 1

Instructions for Model L-800 MIXER

I

INSTALLATION

LOCATION

Place the Mixer in a convenient location, and allow working space on the handwheel side. All maintenance can be handled from this side, the top, and the front. It should not be necessary to bolt the machine to the floor, although holes are provided in the base for use in special cases. Set the Mixer level and use shims if the floor is uneven. The machined edge on top of the transmission case makes an excellent surface for leveling.

ELECTRIC CONNECTION

Before making the electrical connections, read the specifications on the name plate to make sure that they agree with those of your electric service. Remove the top cover, which is held in place by two screws (3 and 7, Fig. 1). Bring the power line in through the hole at the top of the pedestal, and connect to the motor controller (1, Fig. 1). This is the only connection required. Three-phase machines must be so connected that the planetary runs in the direction shown by the arrow in Fig. 1.

To start the motor, set the timer on HOLD and push the START button. The speed selector handle must be at one of the numbers indicating a speed, not at an intermediate position.

LUBRICATION

The oil is drained from the machine before shipping, and both the transmission and the planetary must be refilled before operation.

A - TO FILL THE TRANSMISSION remove the front support for the top cover which serves as the oil-fill plug (8, Fig. 1). Use only the special transmission oil that is shipped with the machine. The oil level should be somewhere between the center and top of the oil gage for correct lubrication. If the oil level falls below the gage line when the motor is running, add more oil. While the machine is running, look down the oil-fill and make sure that oil is pouring out of the delivery tube onto the gear face.

B - FILLING THE PLANETARY: The planetary of Model L-800 contains a gear pump which supplies oil to the internal gear and pinion. This oiling system is the key to the quiet operation and long life of the Mixer. The oil capacity in the recommended operating range is from 5 to 7 fluid ounces. Since approximately 1 oz. remains in the planetary after draining at the time of shipping, 6 oz. are shipped in an 8-oz. can labeled "Oil For Planetary". The following procedure should be observed:

1 - Remove drain plug (14, Fig. 1) to check on previous draining of the planetary. Then replace.

2 - Remove the drip cup (12, Fig. 1), which is held by two screws.

3 - Remove the fill plug in the rim of the planetary and insert the elbow that is supplied with the machine. Turn the elbow with the open end up so that it will guide the oil into the planetary. Pour in the contents of the 8-oz. can and after a few moments to allow the oil to be distributed properly, take out the elbow and screw the fill plug in tight. A little excess oil will run out while this is being done.

4 - Replace the drip cup.

II OPERATION

(1) ELECTRICAL SYSTEM

The L-800 is equipped with a solenoid starter with thermal overload protection and automatic re-set. The pilot circuit is so wired that it is necessary for the handle of the speed selector (18, Fig. 2) to point to one of the four speeds indicated and for the timer to be set for a definite time (or on HOLD) before the machine will start and keep running. With the timer set at "O" the start button becomes a "jog" button and permits inching of the planetary. As soon as the button is released, power to the motor is cut off.

(2) BRAKE

The brake is actuated by the STOP button. This button has two sets of contacts; when it is first depressed the power is cut off from the motor. When pushed all the way down, the brake is applied and remains on until the button is released.

(3) SPEED SELECTION

Speed selection is made by lining up the handle (18, Fig. 2) with numbers on the name plate. Moving the handle from one station to another does not shift gears, but instead changes the engagement of clutches. A cam (6, Fig. 2) and a switch (5, Fig. 2) are provided to turn off the motor automatically as the handle starts to move.

Use the brake, or simply pause until the agitator stops, and the speed can be changed without effort.

(4) BOWLS

The regular bowl for this mixer has a capacity of 80 quarts. By using an adapter and agitator to suit, bowls of 60, 40, or 30 quart capacity can be substituted.

(5) AGITATORS

When putting on an agitator, the bowl must be in the down position. Slip the agitator up on the shaft and turn it around until the driving pin in the shaft reaches the end of the L-shaped slot in the shank. Agitators of various styles are available, each suited to a particular job. They are illustrated on page 28.

(6) ATTACHMENTS

Various attachments and accessories are available for this machine, such as; Dicer, Vegetable Slicer and Shredder, Food Chopper, Soup Strainer and Colander, Juice Extractor, Coffee Mill, Tool Sharpener, Oil Dropper, Tray Support, Water Jacket, Bowl Truck, Bowl Splash Cover and Bowl Extension Ring.

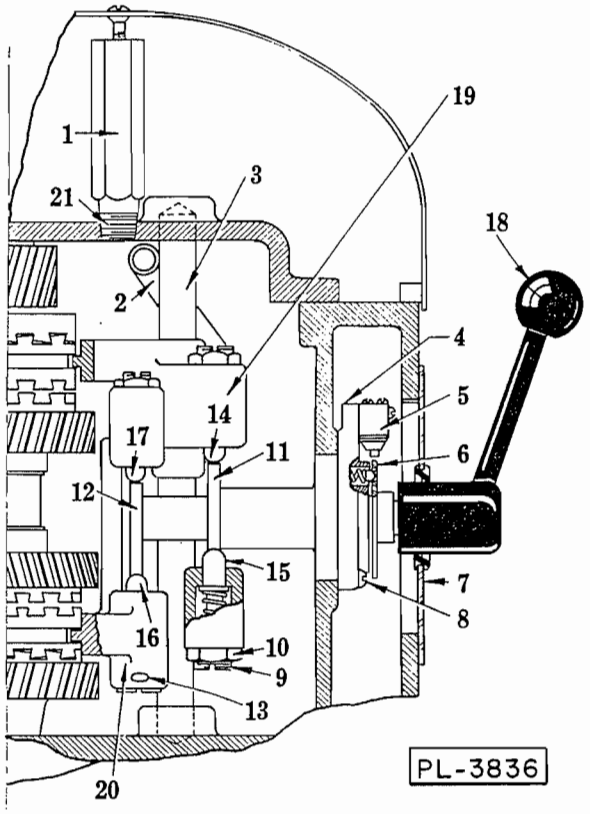

FIG. 2

The attachment socket is of the No. 22 size and four speeds are available, corresponding to the settings of the speed selector handle.

(7) MEAT CHOPPER

The L-800 Mixer is designed to drive the chopper attachment in third speed. Should bone chips or other materials clog the cylinder and stall the machine, turn off the mixer at once, take off the chopper handwheel, and remove the obstruction. Never start a stalled machine in any speed until this has been done.

(8) OVERLOAD RELEASE

The starting switch is equipped with an automatic re-set. When an overload causes the switch to throw out and thus stop the motor, it is only necessary to wait a minute until the thermal element cools, and then press the START button again. The conditions that have caused the overload should of course, be remedied before starting again.

The thermal elements are at the back of the machine, or either side of the motor controller.

III MAINTENANCE

AGITATOR SHAFT BEARINGS

Agitator Shaft Bearings are sealed and ordinarily require no attention. A service technician may remove the seals if greasing becomes necessary.

BOWL LIFT

A small can of graphite grease is shipped with the Mixer to be used on the lift screw and gearing. They should be greased annually. The lift screw can be reached by removing the apron, which is held in place by four screws.

Rub a little graphite grease on the slideways while the apron is off.

The gearing is located on the handwheel bracket inside the pedestal. Remove the top cover (6, Fig. 1) and wipe some grease on the gear teeth. Protect yourself from the electrical supply at the starter. The handwheel shaft may be oiled through an oiler on the handwheel bracket.

DRIP CUP

Should moisture condense in the planetary, due to atmospheric conditions, or the type of work being done, the drip cup will prevent it from reaching the bowl. Take the cup off occasionally and wipe it out.

MOTOR

The front motor bearing receives oil from the transmission.

The rear bearing is grease-packed and should require no attention. However, if greasing does become necessary, a service technician can remove the seals.

PLANETARY

The same oil is used in the planetary as in the transmission, but due to the relatively small volume of oil, it may be advisable to change it more frequently than the transmission oil, especially under steaming conditions such as exist when large quantities of potatoes are being mashed. If the planetary is removed for cleaning, care should be taken to mesh the fiber pump-drive gear with the internal gear before shoving the planetary up into place.

LUBRICATION

When the machine is prepared for shipment, the transmission case and planetary are drained, and they must be refilled before operation. This procedure is explained under LUBRICATION on Page 4. After that, a weekly check should be sufficient.

Observe the following routine.

(1) The oil level in the Transmission should be up to the line in the gage.

(2) The oil level in the planetary should be up to the filling opening. It will be necessary to take off the drip cup and remove the plug (13, Fig. 1) to check this.

(3) When using an attachment, put a drop or two of oil in the oiler (10, Fig. 1).

(4) Keep bowl slideways lubricated.

NOTE: Avoid excessive lubrication.

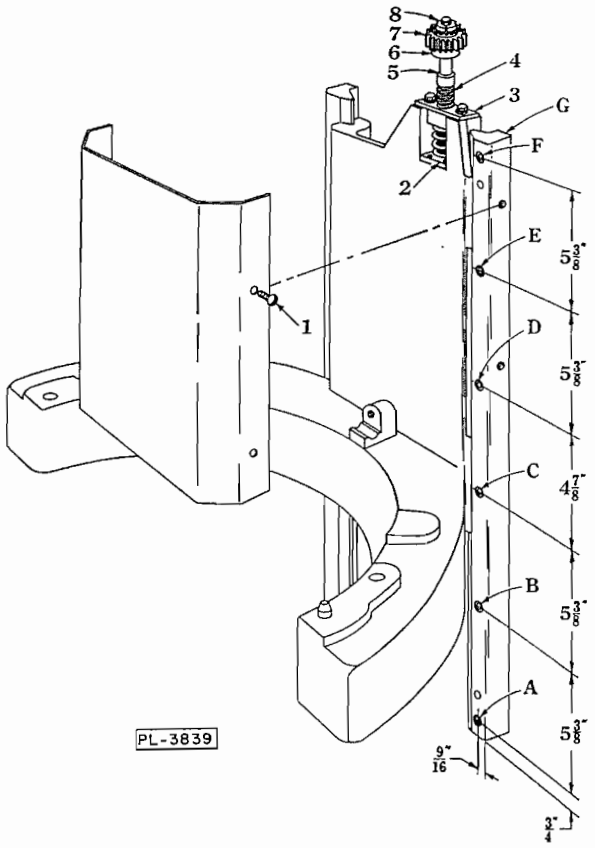

FIG. 3

SERVICE INSTRUCTIONS

I BOWL SUPPORT

A - REMOVAL

To remove the bowl support, it is necessary to take off the right-hand slideway (G, Fig. 3). Proceed as follows:

(1) Remove the apron. It is held by four screws (1, Fig. 3).

(2) Break the paint covering the heads of the three lower screws A, B and C.

(3) Run the bowl support all the way down and remove the bowl lift nut retainer (3, Fig. 3). Then run the nut back up the screw.

(4) Pry the spring seat (2, Fig. 3) up off the pins.

(5) Take out the six socket-head screws A, B, C, D, E & F and remove the right-hand slideway.

The bowl support will then swing clear of the bowl lift screw.

B - REMOVING LOOSENESS BETWEEN BOWL SUPPORT AND WAYS

Excessive play in the bowl support can be taken up by loosening all the screws in the right-hand slideway. The left-hand slideway is doweled and need not be removed. Pull the slideways together by placing large clamps across the slideways at top and bottom of the bowl support when it is in its top position. Tighten the top four screws F, E, D, and C. Run the bowl support down within 1-1/2″ of bottom position, pull the bottom of the slideway in with a clamp, and tighten the two lowest screws B, and A.

C - ADJUSTING BEATER CLEARANCE

Adjustment should always be made with the bowl and type B beater in place. Loosen the lock nut (18, Fig. 1) and turn the screw (19, Fig. 1). Be sure to tighten the lock nut after the proper adjustment has been obtained.

II BOWL LIFT MECHANISM

A - BOWL LIFT SCREW

Replacement of the bowl lift screw necessitates removal of the motor (see VII-A) and the bowl support (see I-A).

End play adjustment in the bowl lift screw (4, Fig. 3) is provided by the lock nut (8, Fig. 3). Upward thrust on the lift screw is taken by a shoulder (5, Fig. 3) which bears against the transmission case; downward thrust is taken by the permanently-sealed ball bearing (6, Fig. 3). A minimum of .005″ end play should be allowed.

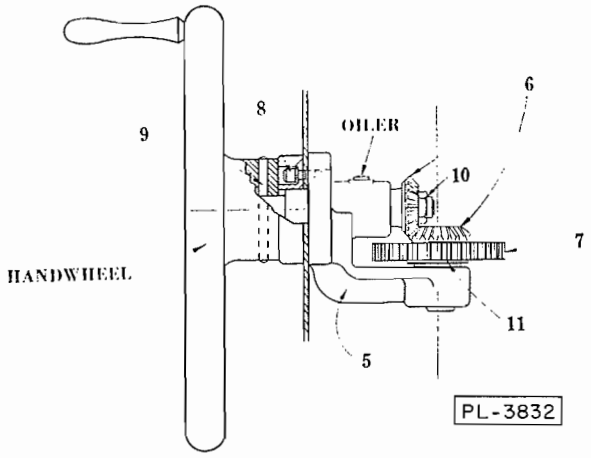

FIG. 4

B - HANDWHEEL BRACKET

This bracket (5, Fig. 4) carries a pair of miter gears (6, Fig. 4) and the bowl-lift gear (7, Fig. 4). It can be removed by taking off the handwheel, thus exposing the four screws (8, Fig. 4) that hold the clamping ring to the bracket.

The handwheel is secured to its shaft by a straight Groov-Pin (9, Fig. 4) which can be driven out in either direction. DO NOT POUND ON END OF HANDWHEEL SHAFT. Pry the bracket free from inside the pedestal, or drive the dowel pins through the holes in the pedestal.

The Flexloc nut (10, Fig. 4) must be set with the handwheel and bracket assembled to the pedestal as in Fig. 4. Allow just enough end play in the handwheel shaft to prevent the handwheel from binding against the clamping ring. The miter gears are held in proper relation by a spacer (11, Fig. 4) placed between the bowl lift gear and the handwheel bracket bearing. A new spacer may be necessary when replacing either of the gears or the bearing.

III BRAKE

BRAKING ACTION

In 4th speed, the brake (21, Fig. 1) should stop the planetary in about one revolution.

TO INCREASE BRAKING ACTION

If the machine does not stop quick enough, hook the brake spring in the next hole in the brake band. Some solenoids have slotted feet and may be raised slightly to increase the spring tension.

TO REDUCE BRAKING ACTION

If the breaking action is too severe, make sure that the solenoid is in its lowest possible position

(if adjustable) and that the spring is in the top hole in the brake band. Pull the solenoid core up by hand until the brake band just touches the drum. With no tension on the spring, the remaining travel of the solenoid core should not exceed 5/16". If the possible travel exceeds this amount, stretch the spring by holding the solenoid closed and pushing down on the brake band. Do this carefully, for it can easily be overdone.

If the solenoid travel is less than 5/16", it will be necessary to reduce the contacting length of the brake band on the drum. Grind down or file the lining near the pivot end until it is clear of the drum.

REMOVAL OF BRAKE BAND

Remove the cotter pin and washer at the pivot. Slip the band off the pivot, and unhook it from the spring.

IV PLANETARY

A - REMOVAL OF PLANETARY

Support the weight of the planetary while removing the retaining screw (1, Fig. 5). If the removal of the planetary proves difficult, use the two 3/8" tapped holes provided on opposite sides of the planetary shaft for anchoring a puller. The holes are plugged with nylon plugs.

If a pry is to be used between the planetary and the internal gear, always pry downward. The cast iron lip (2, Fig. 5) on top of the planetary is breakable. This lip serves as a trap for the oil and would have to be repaired if broken.

On re-assembly of the planetary, care should be taken to mesh the fiber pump-drive gear with the internal gear before shoving the planetary up into place.

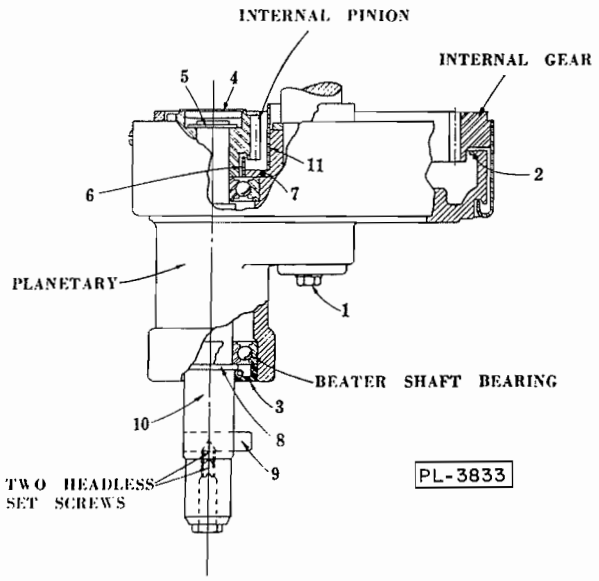

FIG. 5

B - BEATER SHAFT

(1) Remove the planetary as explained above.

(2) Take out the planetary oil seal (3, Fig. 5). This seal can be pried out by using a small screwdriver between the outside of the seal and the planetary casting.

(3) Pry out the oil-retaining cap (4, Fig. 5) which is pressed into the top of the internal pinion. (Be sure to replace this cap when reassembling).

(4) Remove the retaining ring (5, Fig. 5) and the pinion, then drive the beater shaft down through the bearings.

C - BEATER SHAFT BEARINGS

The seals of these bearings are easily removable for cleaning and repacking, should that be necessary. Bearing seals can be removed by inserting a knife blade under the rubber seal where it touches the outer race. They can be snapped back in place by hand.

If a new bearing must be installed, be sure to use a sealed bearing.

If the lower bearing does not come out with the beater shaft (10, Fig. 5) it can be pulled down after the beater shaft is out. The upper bearing can be pulled out after removal of the planetary oil baffle (6, Fig. 5).

When re-assembling the oil baffle to the planetary, a little Permatex around the "O" ring (7, Fig. 5) will improve the seal. Be careful not to cut the "O" ring on the edge of the planetary or baffle.

D - PLANETARY SEAL

The primary purpose of the seal (3, Fig. 5) is to keep moisture and ingredients from the bowl out of the lower bearing. It can be slipped down from the top of the shaft and over the small shoulder (8, Fig. 5) if care is taken. Grease the shoulder so that the seal will slide over it. If installing the seal from the bottom, you must remove the beater pin (9, Fig. 5), clean the shaft, and make sure that the lip of the seal is not cut or folded under. The lip must go up toward the bearing. Make sure that the spring is in place in the seal groove adjacent to the lip. If the lip of the seal is dry, the seal may squeal. A little lubrication worked under the lip will correct this.

V PLANETARY OILING SYSTEM

A - OIL PUMP

To reach the oil pump, the planetary must be taken off. See section IV-A. The oil pump should not require attention, but check to see if it is pumping by turning the large fiber conveying gear counter-clockwise as indicated by the arrow in Fig. 6.

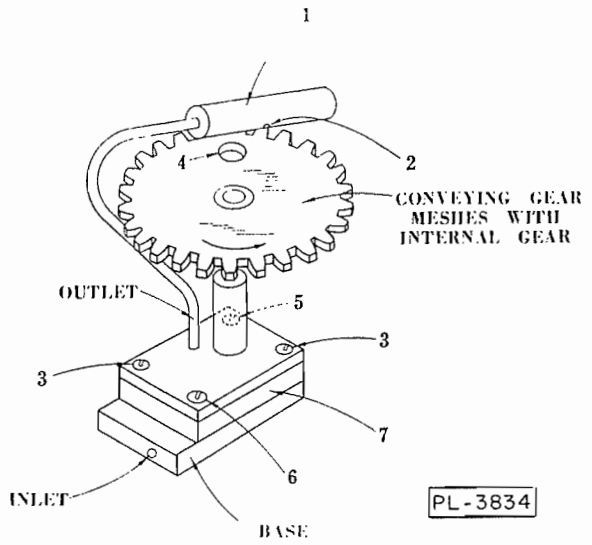

FIG. 6

If there is oil in the planetary, a stream should flow out the end of the manifold (1, Fig. 6) and fall back into the planetary. A little oil should also come out of the small hole (2, Fig. 6) and drip on the conveying gear. If no oil is delivered to the gear, the hole (2, Fig. 6) may be clogged.

To remove the pump, take out the two screws (3, Fig. 6). Insert the screwdriver through the hole (4, Fig. 6) to reach them. The other screws should not be touched, unless it is necessary to disassemble the pump.

The mechanism consists of two small gears which float in the pump body (7, Fig. 6). Therefore, if screws (5 & 6, Fig. 6) are disturbed, it will be necessary to align the top plate assembly with the pump body, so that the shaft and gears turn freely.

Screw 6 (Fig. 6) is larger than screw 5 (Fig. 6), so that the pump can not be assembled wrong.

The oil conveying gear is held to its shaft by a roll pin in the hub. The pin may be driven out in either direction.

B - PLANETARY OIL SHIELDS

The shield (11, Fig. 5) is held in place around the hub of the planetary by friction.

Its purpose is to keep oil from being flung off the conveying gear and internal pinion onto the planetary shaft at high speed. Be sure to replace it if it is ever removed.

C - OIL LEVEL

The oil level in the planetary is subject to considerable variation. The oil-fill hole in the side of the planetary is so located that it also serves as an overflow, if the machine is level.

If the planetary is dry, 6 oz. of oil will bring the level up to the overflow. Sufficient time must be allowed to permit the oil to reach its own level. Machines that have been drained will still have at least 1 oz. left in them, and this must be taken into account. If too much oil is put in, it will be thrown out at high speed and collect in the drip cup.

The same grade of oil is used in the planetary as is used in the transmission. See page 12.

D - OIL LEAKAGE

Oil leakage is controlled in the following manner:

The planetary oil shield (11, Fig. 5) keeps oil from collecting on the hub and working down the planetary shaft.

The oil baffle (6, Fig. 5) keeps oil away from the beater shaft as it is thrown off the pinion teeth or sloshes around in the planetary.

The friction plug (4, Fig. 5) stops any oil leakage from above.

VI TRANSMISSION

A - DISASSEMBLY OF TRANSMISSION

To remove the transmission case cover take off the bearing retainers (2 & 8, Fig. 7). Take off the locking nuts (3 & 9, Fig. 7) and pry off the transmission case cover. The top ball bearings will come off with it. Lay the cover aside carefully so that the oil-delivery tube (2, Fig. 2) will not be bent.

Pull out the shifter slide rod (3, Fig. 2) and disengage upper and lower shifting yokes from the clutches. This can usually be done without taking off the name plate (7, Fig. 2) and gear-shift bracket (4, Fig. 2). Be sure that the power to the machine is off before working on the gear-shift bracket.

The clutch shaft and worm-gear shaft (31 & 32, Fig. 7) must be removed together. The worm gear shaft has a self-aligning ball bearing (20, Fig. 7) at the bottom, so that it can be tilted away from the worm far enough to clear it. Lift off the upper gear (11, Fig. 7) on the planetary shaft. Notice that the shim (7, Fig. 7) on top of this gear has the relieved side up.

Although this gear is reversible, it should be re-installed with the same side up, so mark the top when taking it off.

On the clutch shaft, remove the bearing (4, Fig. 7), washer (5, Fig. 7), top pinion (6, Fig. 7), and clutch (26, Fig. 7). Then work the clutch shaft and worm-gear shaft assemblies out together.

The planetary shaft can be pulled out after the planetary has been removed (See IV-A).

If the lower bearing (18, Fig. 7) must be withdrawn, it will be necessary to first remove the chimney (17, Fig. 7). When replacing the chimney, be sure to get a good seal between it and the transmission case, to prevent leakage of oil.

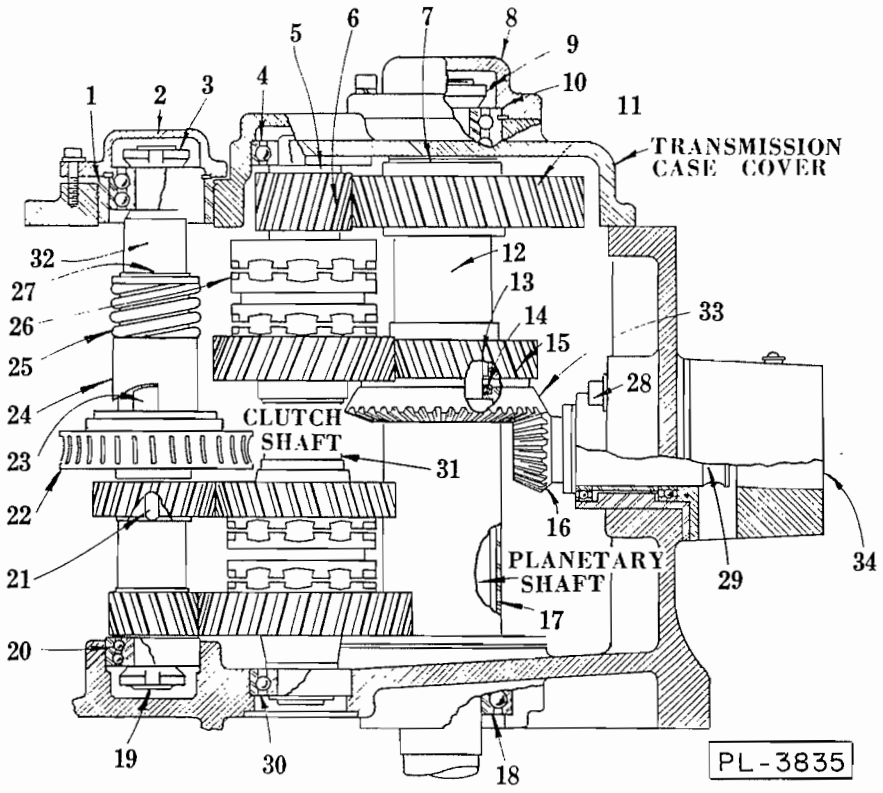

FIG. 7

B - REMOVAL OF ATTACHMENT HUB

The attachment hub (34, Fig. 7) is fastened to the transmission case by four bolts (28, Fig. 7). The heads of these bolts being inside the case, a partial disassembly of the transmission will be necessary before the attachment socket or the bevel pinion (16) can be removed.

Replacement of the square drive sleeve (29, Fig. 7) however, can be accomplished without disturbing any of these parts. SEE REPLACEMENT OF SHEAR KEY, paragraph H, page 11.

C - WORM-GEAR SHAFT, AND ADJUSTMENTS

Start disassembly of the worm-gear shaft from the bottom. When the locking nut (19, Fig. 7) is off, the gears and other parts will be loose on the shaft and may be taken off easily.

When re-assembling, put on the retaining ring (27, Fig. 7), the spring (25, Fig. 7), the shock absorber part (24, Fig. 7) and the worm gear (22, Fig. 7). It will then be necessary to use a vise or press to get these parts up where they belong. Press the worm gear up far enough to permit insertion of the key (21, Fig. 7). Release the vise pressure carefully and avoid burring the worm gear because the bottom of the hub acts as a thrust bearing. The key (21, Fig. 7) will hold the assembly in place until the remaining parts can be threaded on and pulled up tight by the locking nut (19, Fig. 7).

When a sudden load causes the worm gear to turn slightly on its shaft, the cams (23, Fig. 7) move the compressor element (24, Fig. 7) upward so that the spring takes the shock.

The shock absorber action can be tested by holding the shaft in a vise, turning the worm gear by hand against the spring, and releasing.

When re-assembling the transmission, be careful not to cock the outer race of the self-aligning ball bearing (20, Fig. 7). It is possible to install the worm gear shaft by itself and then raise it far enough to get the clutch shaft in place without pulling the bearing (20, Fig. 7) out of its seat. This will avoid the risk of cocking the outer race.

The worm gear must mate properly with the worm on the motor shaft, and a vertical adjustment is provided by a sleeve (1, Fig. 7). The sleeve is correctly set at the factory and locked by two small set screws, so unless replacements have been made no change will be necessary.

Adjustment may be made as follows:—

(1) See that the transmission case cover is bolted down tight.

(2) Take out the two small set screws (one on top of the other) that lock the sleeve (1, Fig. 7). Turn the sleeve (1, Fig. 7) a fraction of a turn in a clockwise direction until the motor shaft begins to bind when revolving the rotor by hand.

(3) Turn the sleeve counter-clockwise until the same thing occurs in the top position.

(4) The total movement may be as much as half a turn. Mark the half-way point. Set the sleeve about midway between the half-way point and the top position. This will bring the worm gear on the high side of center, as it should be.

(5) Use a drill to spot the adjusting sleeve for the set screw. A second set screw goes into the same tapped hole to lock the first one.

D - CLUTCH SHAFT

All gears in this assembly must be free to turn on the shaft and the clutches should slide freely up and down on the splines. If a clutch seems to bind, take it off, turn it to a new position and try again. The top and bottom gears must have a few thousandths end play between the shaft shoulders and the washers that are between them and the ball bearings. The lower bearing (30, Fig. 7) on the clutch shaft must be assembled to take the downward thrust (thin section of outer bearing race up).

E - THE PLANETARY SHAFT

An "O" ring (14, Fig. 7) is set in the bevel gear to prevent oil leakage down the planetary shaft. When moving the bevel gear (33, Fig. 7) on the shaft, be careful not to cut the "O" ring on the keyway (13, Fig. 7) that is just above it.

The bevel gear adjustment is governed by the thickness of the planetary-shaft shim (7, Fig. 7). This shim must be installed with relieved side up and the flat side down.

A new shim may be required if gear (11, Fig. 7), gear (15, Fig. 7), spacer (12, Fig. 7), or top bearing (10, Fig. 7) is replaced. A new bevel gear or pinion should not require any change in shims.

F - THE SHIFTING YOKES

Change of speed is accomplished by turning the shift handle (18, Fig. 2) to one of the positions numbered on the name plate (7, Fig. 2). Moving the handle turns the two cams (11 & 12, Fig. 2) which in turn operate the shifting yokes (19 & 20, Fig. 2) that engage and disengage the clutches. The spring-loaded plungers (14, 15, 16 & 17, Fig. 2) give some flexibility to the shifting so that the handle can be moved to a new position even if a clutch does not engage immediately.

The travel of a plunger can be adjusted by loosening a lock nut (10, Fig. 2) or taking out a cotter pin (13, Fig. 2) and turning a screw (9, Fig. 2). All of these screws should be set so that the total movement of each plunger is between 3/16″ and 7/32″. This insures that when the handle is moved to a different speed the clutch will not hang up in the previous speed. A clutch can not be disengaged if it is transmitting power, but after the motor is shut off and the machine stops, shifting becomes effortless.

G - SPEED CHANGE

Removal of the name plate (7, Fig. 2) exposes the speed-changing mechanism. The plate can be removed without disturbing the shift handle. The precision switch (5, Fig. 2) is connected directly to the line, so cut off the power to the entire machine before working around it. The switch is operated by the cam (6, Fig. 2) so that power to the motor is cut off automatically while speeds are being changed.

The gear-shift bracket assembly (4, Fig. 2) can be removed as a unit by taking out four screws (8, Fig. 2). This bracket is easily removed and affords a handy inspection hole.

When replacing the bracket assembly, have the shift handle in third speed because the shifting yokes naturally take this position when the cams are withdrawn. Tilt the shift cam assembly toward the front of the machine until one side of the bracket is in contact with the transmission case. Then square up the bracket against its seat and insert the screws. It is very important to have a good seal to the transmission case. Paint the joint with Permatex or sealing compound.

H - REPLACEMENT OF SHEAR KEY IN ATTACHMENT DRIVE

The attachment drive is protected by a brass key (1, Fig. 8) that will shear if the load becomes excessive. To replace a sheared key it is only necessary to remove the square-drive sleeve (2, Fig. 8). The sleeve can be taken out through the attachment socket. The screw (3, Fig. 8) that holds the sleeve in has a left-hand thread; turn it clockwise to remove.

If the sleeve sticks and does not come out easily, insert a standard 3/8″-16 screw into the right-hand threads at (4, Fig. 8). The screw should be long enough to reach out where it can be grasped and used as a puller.

After taking out the pieces of the sheared key check to see that the square-drive sleeve turns freely inside the pinion shank before putting in the new key.

The replacement key must be of brass.

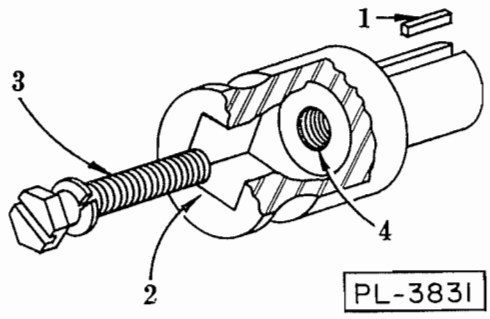

FIG. 8

I - OIL SYSTEM

The oil level in the transmission case should always be at, or slightly above, the line on the gage. The transmission oiling system consists of a flinger (4, Fig. 1) pinned to the motor shaft behind the worm, a guide (2, Fig. 1) to direct the oil and a tube (5, Fig. 1) which delivers the oil to the gear (9, Fig. 1).

The discharge end of the oil tube is visible through the oil-fill hole (21, Fig. 2). After any service work has been done involving the opening

of the transmission case, check the end of this tube to make certain that a full stream of oil is striking the gear. If the oil stream fails or is intermittent, the intake end of the tube has been bent.

J - OIL

The oil shipped by the factory for use in these mixers is Gearep No. 65, made by the Standard Oil Co. of Ohio. It is a high quality, extreme-pressure gear oil with oxidation and corrosion-inhibiting additives. Its viscosity is 65 to 70 Saybolt universal seconds at 210° F. If any other oil is substituted, it is important to check the flow out of the oil delivery tube. Any oil that is too heavy to circulate will not do for this application. In general, the oil should be as heavy as an SAE-30 motor oil, but no heavier than a light, all purpose, automotive gear oil.

Always check oil flow through the delivery tube.

VIII THE MOTOR

A - REMOVING MOTOR

(1) Shut off the power to the machine at the source and remove the top cover.

(2) Take out the motor controller (1, Fig. 1). It will only be necessary to remove one screw at the top of the controller base.

(3) Drain the oil from the transmission case. Remove the drain plug (16, Fig. 1).

(4) Remove the cover plate (17, Fig. 1). This gives access to the bottom motor bolt. The other two bolts can be seen from the top of the machine.

If a hoist is available, an eyebolt can be used in the hole provided for it on the motor next to the junction box. The hole is tapped 3/8″-16. Without a hoist, removing the motor is a two-man job. After it has been worked out of its seat, it can be rested on the throat of the pedestal, which helps to protect the bowl-lift gearing. Do not pull the motor back so far that it falls down on these gears.

There is no problem of motor alignment, since the motor is located by the face and bore of its seat in the transmission case. An "O" ring serves as a seal between the motor and transmission case. Permatex spread on this diameter keeps oil from getting past the "O" ring and the machined grooves.

When installing the motor, be sure that the "O" ring is wet with Permatex or oil, so that it will be compressed when entering the transmission case and not be cut.

B - THE OIL FLINGER

The oil flinger is small enough to clear the transmission case when withdrawing the motor. Before replacing the motor, check the flinger to see that it is running true. A flinger that is not running true can force oil through the bearing, which is objectionable.

If any oil appears inside the motor at the bottom of the bearing bracket, remove the flinger and examine the oil-return hole just below the bearing. If the bearing contains grease, there is a possibility that some of it may plug this hole. As long as this drain is open, no oil will accumulate in the motor.

C - MOTOR LUBRICATION

The front bearing receives oil from the transmission. The rear bearing is grease packed and should require no attention.

VIII ELECTRICAL SYSTEM AND TIMER

A - MOTOR CONTROLLER

When the solenoid on the motor controller is energized, the controller circuit closes and starts the motor, but the solenoid cannot be energized until the precision switch (5, Fig. 2) is closed. This switch closes whenever the shift handle is in one of the numbered positions on the name plate.

B - TIMER

The timer is connected into the holding circuit of the motor controller. If its contacts are not closed, the motor will run only as long as the START button is held down. In this case, the start button can be used as a jog button.

As soon as the timer is set, the holding circuit is completed and the motor will start and continue to run when the start button is pressed and released.

Do not try to force the timer. A mechanical stop inside the timer prevents a short-cut from "Hold" to "O" position. If it doesn't turn clockwise, it might actually be on the hold position and only look as though it were on zero.

C - BRAKE CIRCUIT

The brake circuit is connected to the line at the motor controller, but the brake is operated by the STOP button, not by the controller.

The brake circuit has one live terminal at all times.

To stop the mixer quickly, press the stop button and hold it down against the bottom contacts until the brake brings the machine to rest.

D - OVERLOAD RELEASE

The starting switch is equipped with an automatic re-set. When an overload causes the switch to throw out and thus stop the motor, it is only necessary to wait a minute until the thermal element cools, and then press the START button again. The conditions that have caused the overload should of course, be remedied before starting again. The thermal elements are at the back of the machine, on either side of the motor controller.

E - WIRING DIAGRAM

A wiring diagram to suit the electrical specifications of the particular machine is attached inside the large top cover.

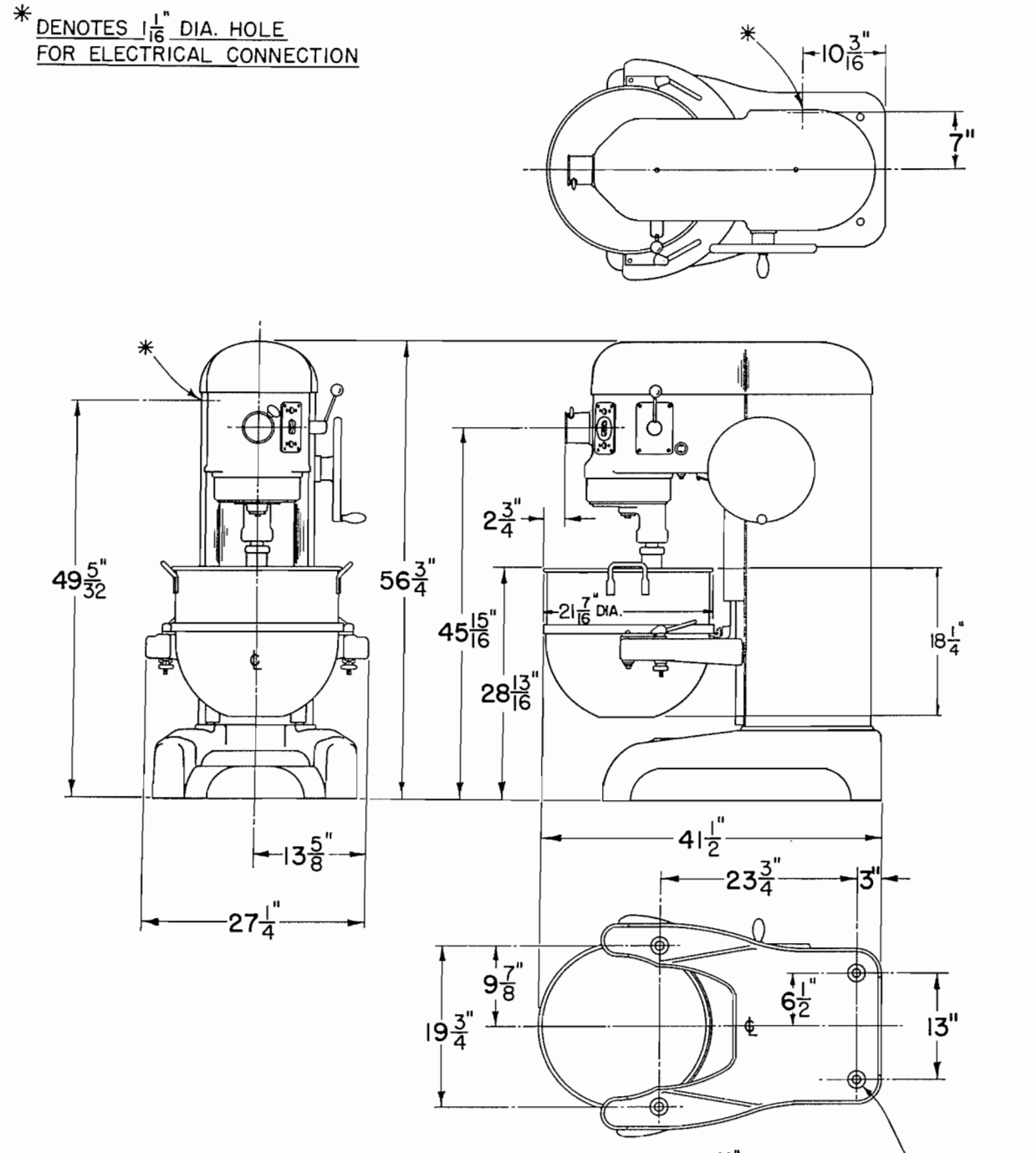

INSTALLATION DIAGRAM

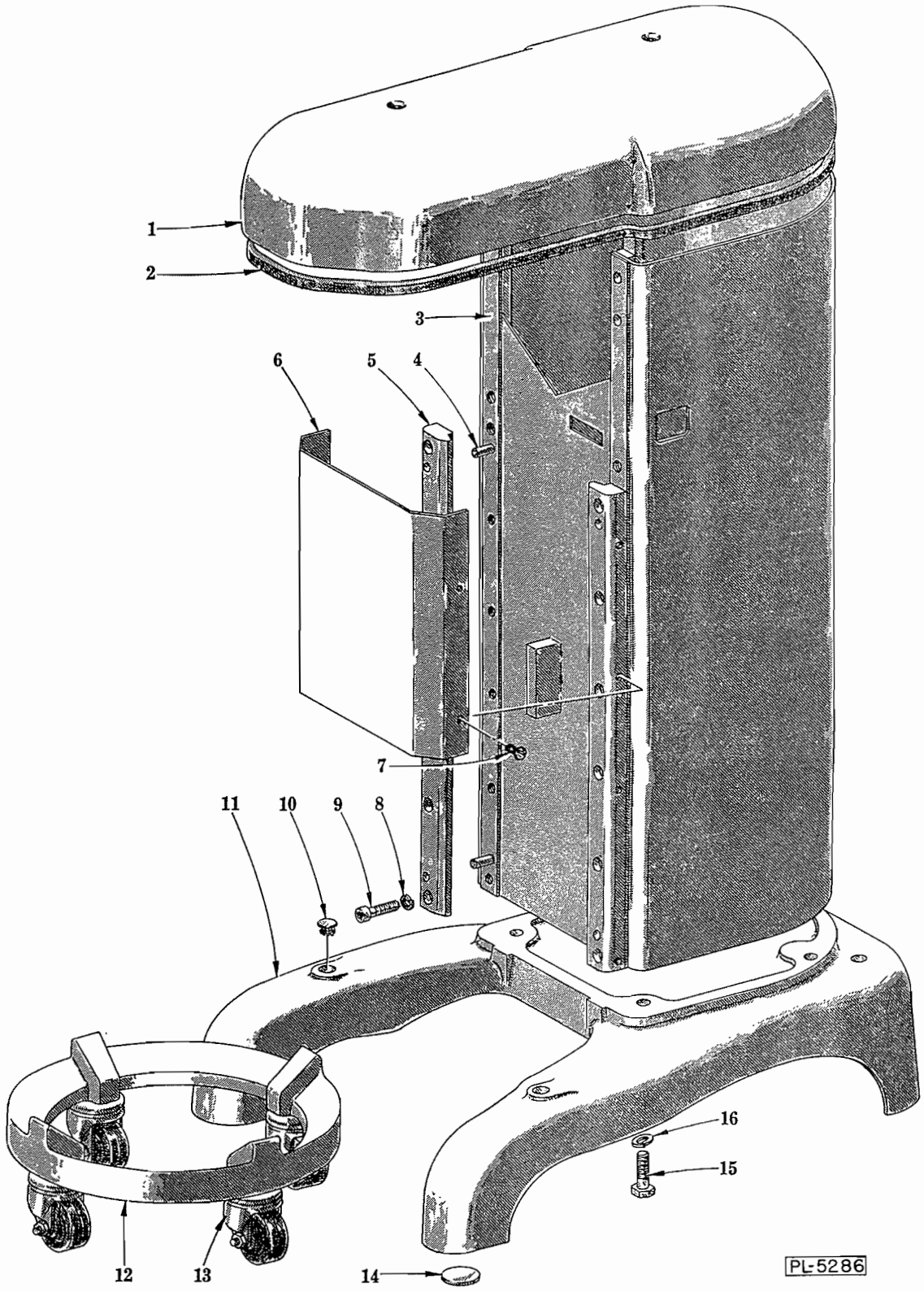

BASE AND PEDESTAL UNIT

BASE AND PEDESTAL UNIT

ILLUS. PL-5286	PART NO.	NAME OF PART	AMT.
1	S-24801-1	Top Cover Assy. (Incls. item #2)	1
2	M-24781-1	Seat - Top Cover	1
3	T-62343-2	Pedestal Assy. (Incls. item #4)	1
4	P-11800-143	Dowel	2
5	R-24189-3	Slideway - Pedestal	2
6	S-24260	Apron - Pedestal	1
7	SC-10-13	Mach. Screw - #10-24 x 3/8" Truss Hd.	4
8	WL-4-2	Lock Washer - 3/8" x .136" x .070"	12
9	SC-40-24	Cap Screw - 3/8"-16 x 1-1/2" Soc. Fil. Hd.	12
10	M-72442-1	Plug Button (Used to plug holes for Hold-Down Bolts)	4
11	T-80311-2	Base	1
12	R-21922-1	Bowl Truck Assy. (Incls. item #13)	1
13	P-65919	Caster	4
14	PL-3-47	Plug - 1-7/8" Expan.	2
15	SC-37-3	Fin. Bolt - 1/2"-13 x 2" Hex Hd.	4
16	WL-4-14	Lock Washer - 1/2" x .109" x .172"	4

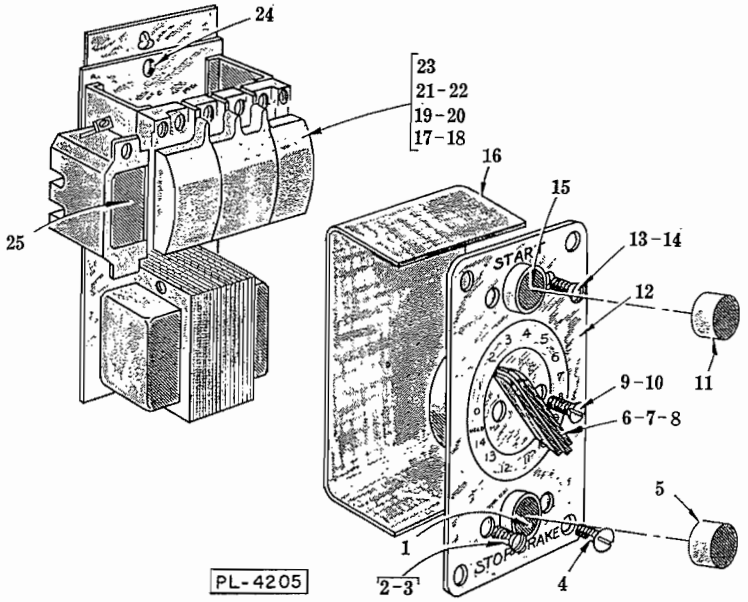

TIMER AND CONTROL UNIT

ILLUS. PL-4205	PART NO.	NAME OF PART	AMT.
1	R-62647	Station - Push Button	1
2	SC-15-26	Mach. Screw - #8-32 x 5/16" Oval Hd.	2
3	WS-2-18	Washer	2
4	SC-10-32	Mach. Screw #8-32 x 3/8" Truss Hd.	4
5	M-65748-3	Cap - Push Button (Stop)	1
6	P-24656	Timer (15 Min.)	1
7	P-70484-2	Timer (30 Min.)	1
8	P-73540	Dial - Timer (30 Min. Timer)	1
9	SC-14-41	Mach. Screw - #5-40 x 3/8" Flat Hd.	2
10	WS-2-18	Washer (Between timer & plate)	2
11	M-65748-4	Cap - Push Button (Start)	1
12	R-24262	Plate - Timer (15 Min.)	1
13	SC-15-26	Mach. Screw - #8-32 x 5/16" Oval Hd.	2
14	WS-2-18	Washer	2
15	R-62647	Station - Push Button	1
16	M-69918	Insulator - Push Button Station	1
**17	P-69756-1	Starter - Magnetic (Less Elements) 1 Ph., (115 V.)	1
**18	P-69755-1	Starter - Magnetic (Less Elements) 1 Ph., (230 V.)	1
**19	P-24669-1	Starter - Magnetic (Less Elements) 3 Ph., (208-240 V.)	1
**20	P-24669-3	Starter - Magnetic (Less Elements) 3 Ph., (110 V.)	1
**21	P-24220-1	Starter - Magnetic (Less Elements) 3 Ph., (440 V.)	1
**22	P-24220-2	Starter - Magnetic (Less Elements) 3 Ph., (550 V.)	1
**23	P-61689	Starter - Magnetic (Less Elements) 2 Ph., (Below 250 V.)	1
24	SC-7-40	Mach. Screw - #8-32 x 5/16" Rd. Hd.	1
25	*	Thermal Element - Magnetic Starter (Give Elec. Spec. & Mach. Model)	As Reqd.

* Hobart service technician to use Starter Element Part No. as listed on Starter Parts Sheet.

** Give Elec. Spec. & Mach. Model

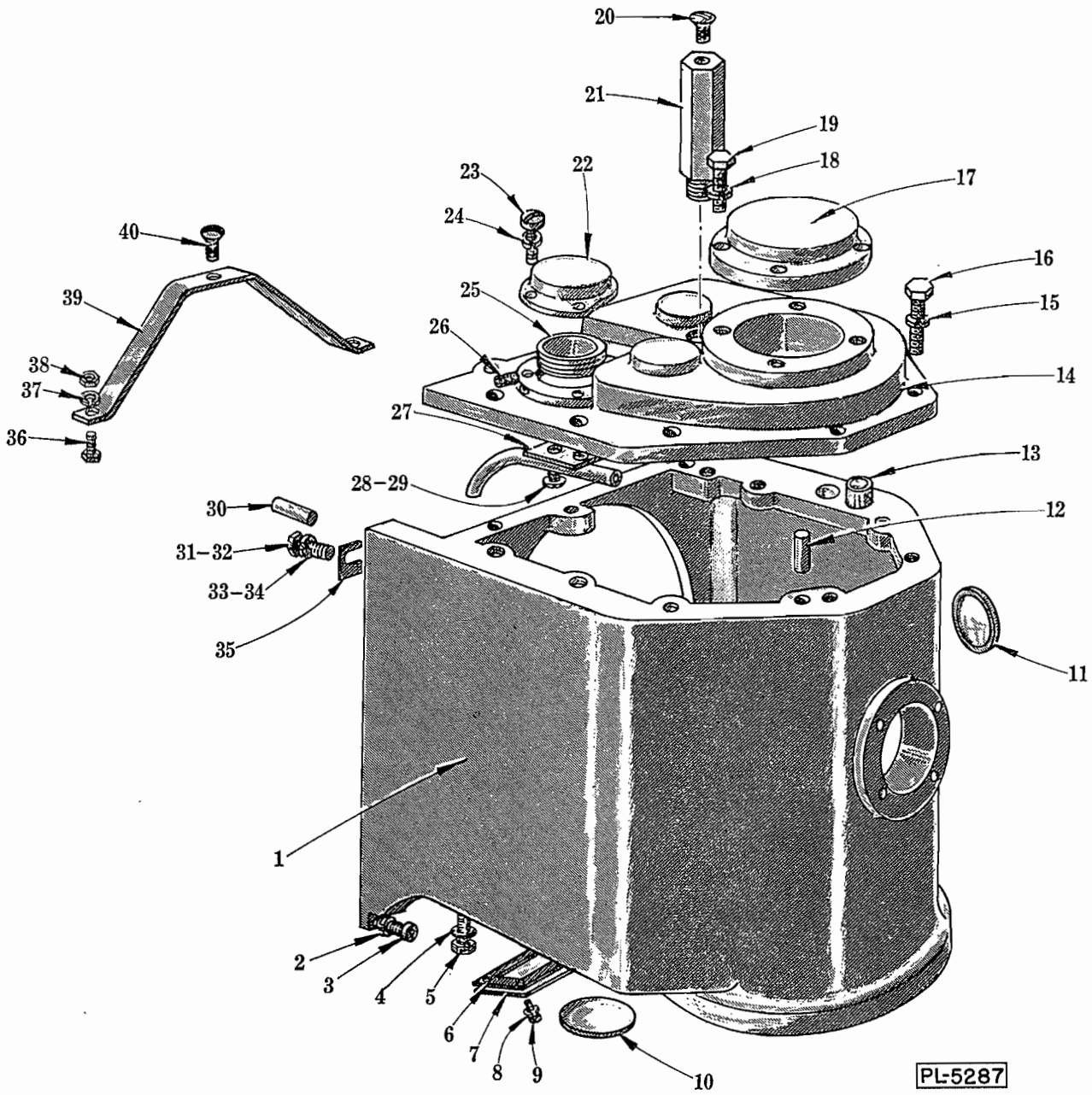

TRANSMISSION CASE UNIT

TRANSMISSION CASE UNIT

ILLUS. PL-5287	PART NO.	NAME OF PART	AMT.
1	T-24202	Case - Transmission	1
2	WL-4-13	Lock Washer - 1/2" x .171" x .125"	2
3	SC-40-36	Cap Screw - 1/2"-13 x 1-3/4" Soc. Fil. Hd.	2
4	GR-2-1	Gasket - Copper Asbestos	1
5	SC-62-60	Fin. Bolt - 1/2"-20 x 1" Hex Hd.	1
6	M-24665	Gasket - Transmission Case Cover Plate	1
7	M-24264	Plate - Transmission Case Cover	1
8	WL-3-15	Lock Washer - #8 x .047" x .031"	4
9	SC-68-14	Mach. Screw - #8-32 x 3/8" Trimmed Hex Hd.	4
10	PL-3-39	Plug - 2-1/4" Expan.	1
11	M-22793	Gage - Oil Level	1
12	P-11800-224	Dowel	2
13	V-24670	Insulator - Fiber	2
14	T-24203	Cover - Transmission Case	1
15	WL-4-2	Lock Washer - 3/8" x .136" x .070"	11
16	SC-62-48	Fin. Bolt - 3/8"-16 x 1-1/8" Hex Hd.	11
17	P-24255	Retainer - Planetary Bearing	1
18	WL-3-44	Lock Washer - 5/16" x .125" x .078"	4
19	SC-36-28	Fin. Bolt - 5/16"-18 x 1-1/4" Hex Hd.	4
20	SC-15-70	Mach. Screw - 1/4"-20 x 1" Oval Hd.	1
21	M-24782	Support - Top Cover Front	1
22	P-24256	Retainer - Upper Worm Shaft Bearing	1
23	SC-38-5	Cap Screw - 1/4"-20 x 1" Fil. Hd.	4
24	WL-3-37	Lock Washer - 1/4" x .109" x .062"	4
25	P-24254	Sleeve - Worm Gear Adj.	1
26	SC-47-70	Set Screw - #10-32 x 3/8" Soc. Hdls. Cup Pt.	2
27	P-24253	Oil Delivery Tube & Plate Assy.	1
28	SC-7-82	Mach. Screw - #10-24 x 3/4" Rd. Hd.	2
29	NS-32-1	Stop Nut - #10-24 "Flexloc"	2
30	P-11800-221	Dowel	2
31	SC-62-66	Fin. Bolt - 1/2"-13 x 1-3/4" Hex Hd.	2
32	SC-62-67	Fin. Bolt - 1/2"-13 x 2-1/4" Hex Hd.	2
33	WL-4-14	Lock Washer - 1/2" x .109" x .172"	1
34	WL-4-13	Lock Washer - 1/2" x .171" x .125"	3
35	M-68288	Shim (.0179" Thick)	As Reqd.
36	SC-36-4	Fin. Bolt - 1/4"-20 x 3/4" Hex Hd.	2
37	WL-3-37	Lock Washer - 1/4" x .109" x .062"	2
38	NS-13-1	Full Nut - 1/4"-20 Hex Fin.	2
39	P-62108	Strap - Top Anchoring	1
40	SC-15-76	Mach. Screw - 1/4"-20 x 1-3/4" Oval Hd.	1

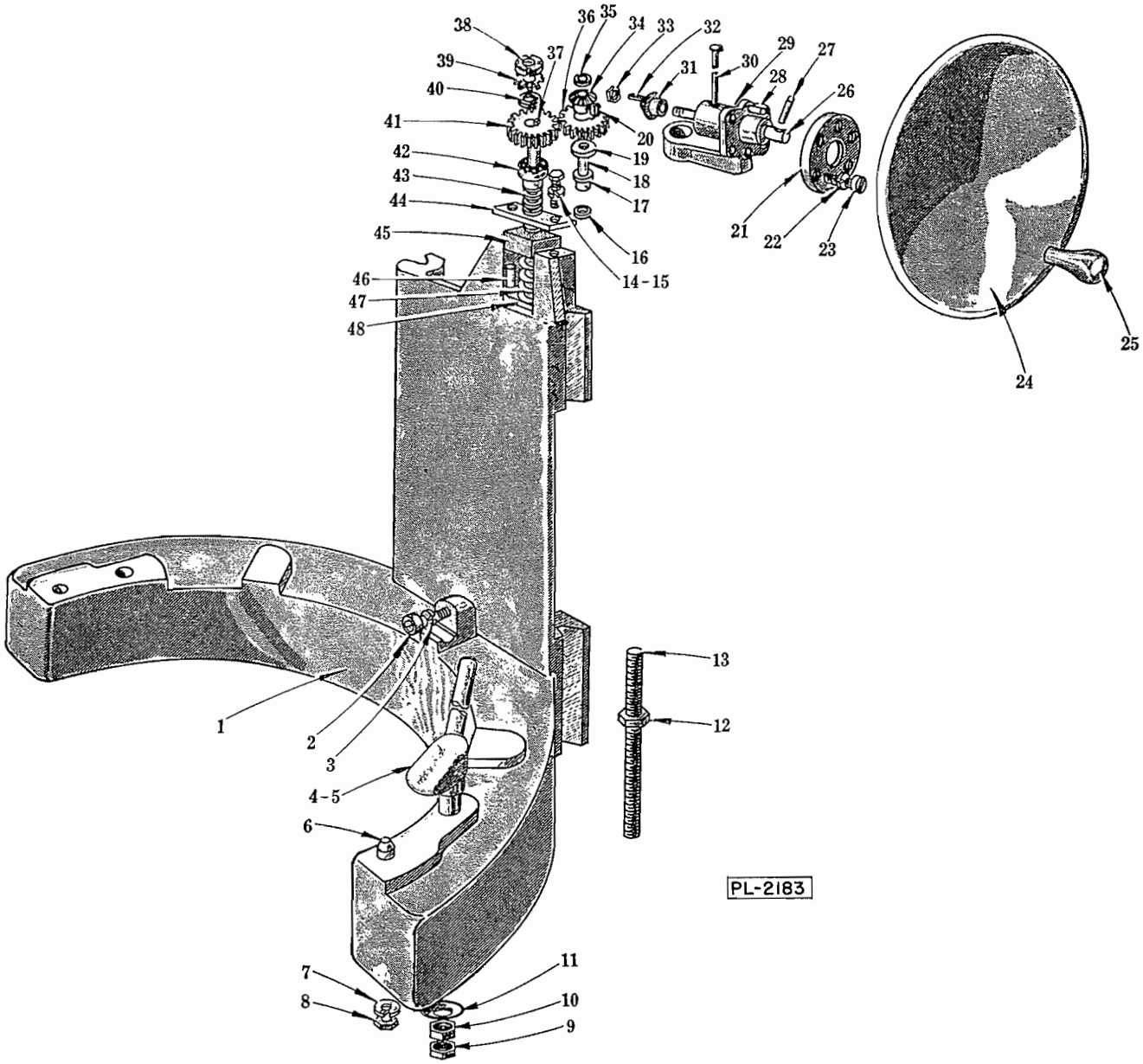

BOWL SUPPORT AND LIFT UNIT

BOWL SUPPORT AND LIFT UNIT

ILLUS. PL-2183	PART NO.	NAME OF PART	AMT.
1	T-24200	Support - Bowl	1
2	M-24507	Special Screw - 1/2"-13 Soc. Hd.	1
3	WL-4-14	Lock Washer - 1/2" x .109" x .172"	1
4	P-65922-3	Bowl Clamp Assy. - R.H.	1
5	P-65922-4	Bowl Clamp Assy. - L.H.	1
6	M-20979-1	Stud - Bowl Locating	2
7	WL-4-12	Lock Washer - 1/2" x .170" x .099"	2
8	NS-13-30	Full Nut - 1/2"-13 Hex Fin.	2
9	NS-17-38	Jam Nut - 5/8"-11 Hex Fin.	2
10	NS-13-42	Full Nut - 5/8"-11 Hex Fin.	2
11	M-64636	Spring Washer - Bowl Clamp	2
12	NS-17-27	Jam Nut - 1/2"-13 Hex Fin.	1
13	V-24221	Stop Screw - Bowl Support	1
14	WL-4-2	Lock Washer - 3/8" x .136" x .070"	2
15	SC-36-53	Fin. Bolt - 3/8"-16 x 7/8" Hex Hd.	2
16	RR-5-2	Retaining Ring (Spirolox)	1
17	M-24603	Bearing - Hand Wheel Bracket	1
18	M-24194	Shaft - Miter Gear	1
19	M-24614	Washer - Miter Gear Spacer	1
20	KW-3-3	Key - #404 Woodruff	1
21	M-24609	Ring - Hand Wheel Bracket Clamping	1
22	WL-3-42	Lock Washer - 5/16" x .047" x .078"	4
23	SC-11-95	Mach. Screw - 5/16"-18 x 1" Fil. Hd.	4
24	R-78182-1	Hand Wheel & Handle Sub-Assy. (Incls. item #25)	1
25	P-24765	Handle - Bowl Lift Hand Wheel	1
26	M-24191	Shaft - Hand Wheel	1
27	PG-7-19	Groov-Pin - Type #5, 1/4" Dia. x 2-3/4" Lg.	1
28	RP-2-6	Rollpin - 1/4" Dia. x 1" Lg.	2
29	R-24190	Bracket - Hand Wheel (Incls. item #17)	1
30	OG-3-47	Oiler	1
31	M-24196	Pinion - Bowl Lift Miter (23T)	1
32	R-12430-47	Key - 3/16" x 3/16" x 11/16" Lg.	1
33	NS-32-29	Stop Nut - 1/2"-20 "Flexloc"	1
34	M-24195	Gear - Bowl Lift Miter (23T)	1
35	RR-5-2	Retaining Ring (Spirolox)	1
36	M-24192	Gear - Bowl Lift (41T)	1
37	R-12430-43	Key - 3/16" x 3/16" x 7/16" Lg.	1
38	NS-34-4	Lock Nut - N.D. #N-03	1
39	WL-12-4	Lock Washer - N.D. #W-03	1
40	WS-10-17	Washer	2
41	M-24193	Gear - Bowl Lift Screw (31T)	1
42	BB-5-23	Ball Bearing - N.D. #Z 99503	1
43	P-24197	Screw - Bowl Lift	1
44	M-24201	Retainer - Bowl Lift Nut	1
45	M-24198	Nut - Bowl Lift Screw	1
46	RP-2-11	Rollpin - 3/16" Dia. 1/2" Lg.	2
47	M-24618	Spring - Bowl Support Stop	1
48	M-24617	Seat - Bowl Support Stop Spring	1

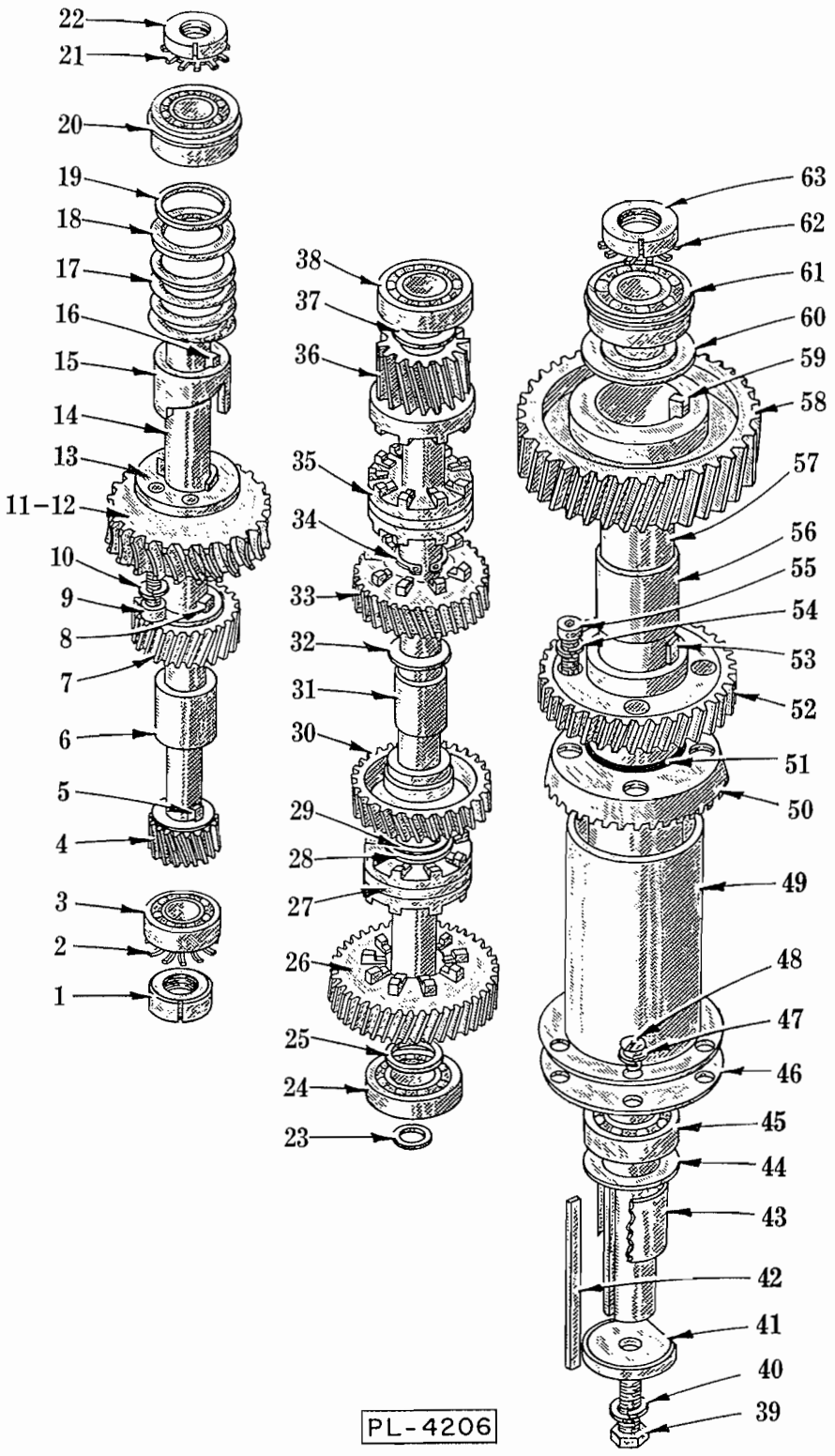

TRANSMISSION UNIT

TRANSMISSION UNIT

ILLUS. PL-4206	PART NO.	NAME OF PART	AMT.
1	NS-34-5	Lock Nut - N.D. #N-04	1
2	WL-12-5	Lock Washer - N.D. #W-04	1
3	BB-12-7	Ball Bearing - SKF #1204 Self-Alignment	1
4	M-24205	Gear - Lower, Worm Shaft (17T)	1
5	R-12430-53	Key - 3/16" x 3/16" x 15/16"	1
6	M-24206	Spacer - Worm Gear Shaft	1
7	M-24207	Gear - Upper, Worm Shaft (25T)	1
8	R-12430-51	Key - 3/16" x 3/16" x 25/32"	1
9	SC-40-8	Cap Screw - 1/4"-20 x 1" Soc. Fil. Hd.	4
10	WL-3-37	Lock Washer - 1/4" x .109" x .062"	4
11	P-24208	Worm Gear (29T., 30-60 Cy.)	1
12	P-24735	Worm Gear (31T., 25-50 Cy.)	1
13	P-61497	Flange - Shock Absorber Drive	1
14	R-24204	Shaft - Worm Gear	1
15	P-61498	Compressor - Shock Absorber	1
16	V-24546	Key - Compressor to Shaft	1
17	M-9733	Spring - Worm Shaft	1
18	M-24238	Washer - Shock Absorber	1
19	RR-5-10	Retaining Ring (Spirolox)	1
20	BB-9-37	Ball Bearing - N.D. #45504 V	1
21	WL-12-5	Lock Washer - N.D. #W-04	1
22	NS-34-5	Lock Nut - N.D. #N-04	1
23	RR-5-4	Retaining Ring (Spirolox)	1
24	BB-8-31	Ball Bearing - Fafnir #7205W	1
25	M-24210	Spacer - Clutch Shaft	1
26	P-24539	Lower Clutch and Lower Gear Assy. (49T)	1
27	P-24213	Clutch - Shifting	1
28	RR-5-14	Retaining Ring (Spirolox)	1
29	M-60767	Washer - Clutch Shaft	1
30	P-24538	Lower Clutch and Upper Gear Assy. (41T)	1
31	R-24209	Shaft - Clutch	1
32	M-24216	Washer - Clutch Shaft	1
33	P-24537	Upper Clutch and Lower Gear Assy. (33T)	1
34	RR-4-13	Retaining Ring (Truarc)	1
35	P-24213	Clutch - Shifting	1
36	P-24545	Upper Clutch and Upper Gear Assy. (17T)	1
37	M-24210	Spacer - Clutch Shaft	1
38	BB-18-33	Ball Bearing - Fafnir #205K	1
39	SC-62-58	Fin. Bolt - 3/8"-24 x 1-1/4" Hex Hd.	1
40	WL-6-27	Lock Washer - 3/8" x .136" x .070"	1
41	M-24266-1	Washer - Planetary	1
42	R-12430-195	Key - 1/4" x 1/4" x 4"	1
43	M-60486	Shield - Planetary Oil	1
44	M-24543	Washer - Planetary Spacer	1
45	BB-15-26	Ball Bearing - Fafnir #P9109PP	1
46	M-60157	Gasket - Chimney	1
47	WL-9-8	Lock Washer - 1/4" Csk. Ext. Shakeproof	5
48	SC-13-79	Mach. Screw - 1/4"-20 x 1/2" Flat Hd.	5
49	M-61507	Chimney and Flange Assy.	1
50	P-61727	Gear - Spiral Bevel (41T)	1
51	R-67500-19	"O" Ring - Bevel Gear	1
52	P-24223	Gear - Planetary Shaft Lower (35T)	1
53	R-12430-211	Key - 5/16" x 5/16" x 1-1/16"	1
54	WL-3-42	Lock Washer - 5/16" x .047" x .078"	4
55	SC-40-15	Cap Screw - 5/16"-18 x 1-1/4" Soc. Fil. Hd.	4
56	M-24224	Spacer - Planetary Shaft	1
57	S-24222	Shaft - Planetary	1
58	P-24225	Gear - Upper Planetary Shaft (53T)	1
59	R-12430-210	Key - 5/16" x 5/16" x 1-3/8"	1
60	M-24226	Shim - Planetary Shaft	1
61	BB-9-10	Ball Bearing - MRC - G5206 KF	1
62	WL-12-7	Lock Washer - N.D. #W-06	1
63	NS-34-7	Lock Nut - N.D. #N-06	1

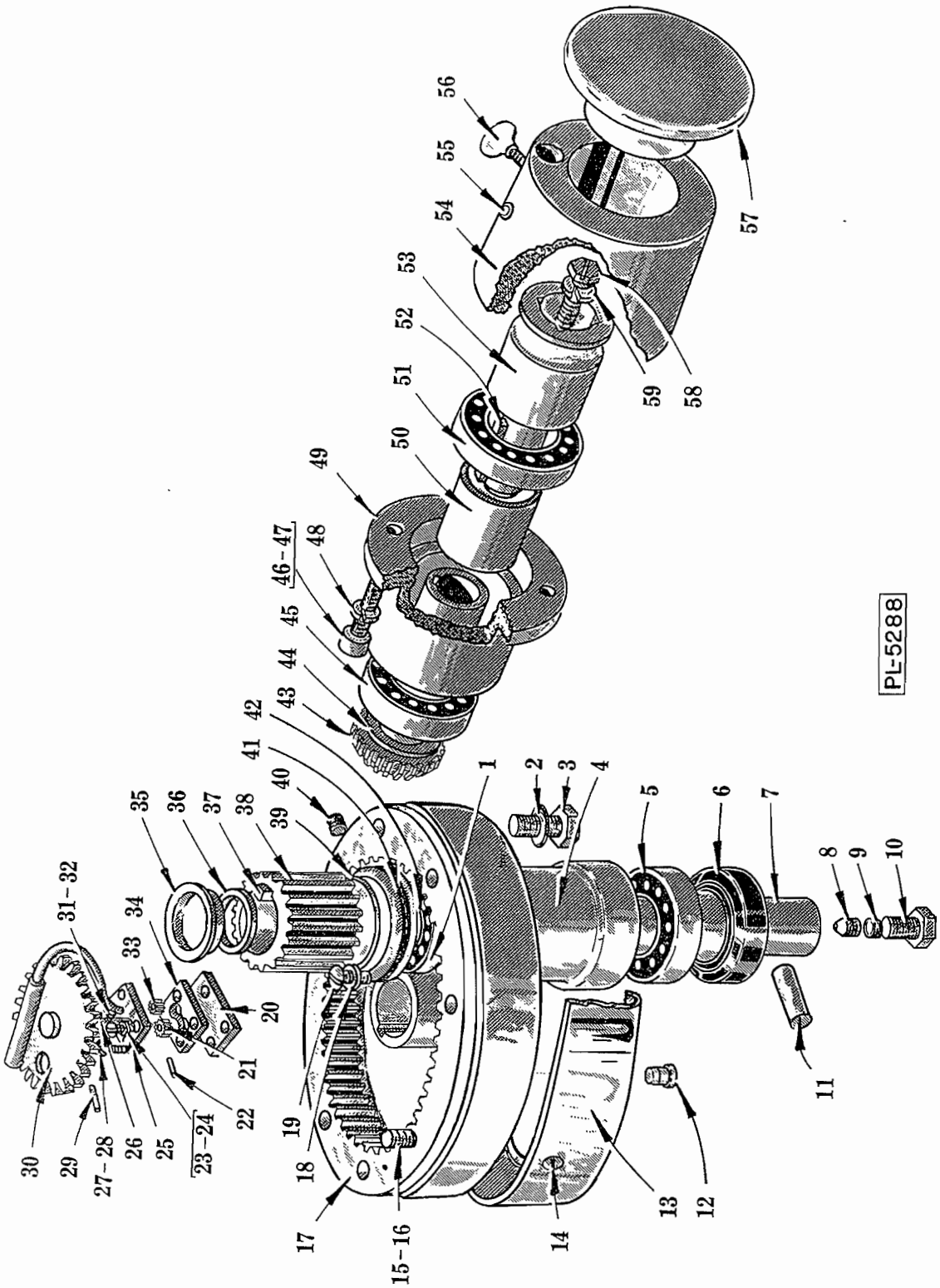

PLANETARY AND ATTACHMENT HUB UNITS

PLANETARY AND ATTACHMENT HUB UNITS

ILLUS. PL-5288	PART NO.	NAME OF PART	AMT.
1	BB-6-36	Ball Bearing - M.R.C. - #306-SZZ	1
2	GR-2-1	Gasket - Copper Asbestos	1
3	SC-62-60	Fin. Bolt - 1/2"-20 x 1" Hex Hd.	1
4	T-24265-1	Planetary	1
5	BB-7-39	Ball Bearing - M.R.C. - #207-SZZ	1
6	M-24651	Seal - Planetary	1
7	M-64137	Agitator Shaft Sub-Assy. Unit (Incls. items #8, 9, 10 & 11)	1
8	V-7744	Set Screw - Hdls. Cone Pt.	1
9	SC-46-64	Set Screw - 3/8"-16 x 3/8" Hdls. Cup Pt.	1
10	M-64723	Plug Screw - Agitator Shaft	1
11	V-7425	Pin - Agitator Shaft	1
12	M-80543	Plug - Planetary Hole (Pressed in Place)	2
13	R-60458	Cup - Drip	1
14	SC-10-32	Mach. Screw - #8-32 x 3/8" Truss Hd.	2
15	SC-40-23	Cap Screw - 3/8"-16 x 1-1/4" Soc. Fil. Hd.	4
16	WL-4-1	Lock Washer - 3/8" x .078" x .125"	4
17	R-24267	Gear - Internal (59T)	1
18	WS-3-23	Washer	2
19	SC-8-65	Mach. Screw - 1/4"-20 x 3/8" Rd. Hd.	2
20	M-60443	Plate - Oil Pump Bottom	1
21	M-60445-2	Gear - Oil Pump (15T)	1
22	RP-2-9	Rollpin - 5/64" Dia. x 3/8" Lg.	1
23	SC-8-20	Mach. Screw - #10-32 x 5/8" Rd. Hd.	1
24	WL-3-22	Lock Washer - #10 x .055" x .040"	1
25	M-60466	Top Plate Assy.	1
26	M-60444	Shaft - Oil Pump	1
27	SC-9-51	Mach. Screw - #10-32 x 7/8" Rd. Hd.	2
28	WL-3-22	Lock Washer - #10 x .055" x .040"	2
29	RP-2-8	Rollpin - 5/64" Dia. x 11/16" Lg.	1
30	M-60467	Conveying Gear Assy. (18T)	1
31	SC-7-44	Mach. Screw - #8-32 x 5/8" Rd. Hd.	1
32	WL-3-15	Lock Washer - #8 x .047" x .031"	1
33	M-67736	Gear - Oil Pump (15T)	1
34	M-60440	Body - Oil Pump	1
35	M-60071	Cap - Oil Retaining	1
36	RR-5-8	Retaining Ring (Spirolox)	1
37	R-12430-154	Key	1
38	P-24270	Pinion - Internal (18T)	1
39	M-73010	Oil Baffle - Planetary	1
40	FP-28-38	Plug - 3/8" Hex Socket Pipe	1
41	R-67500-21	"O" Ring - Planetary	1
42	M-60768	Shim - Internal Pinion	1
43	P-61224	Bevel Pinion (16T)	1
44	M-61225	Shim - Bevel Pinion (Give Thk.)	As Reqd.
45	BB-15-16	Ball Bearing - Fafnir #9106PP	1
46	SC-40-67	Cap Screw - 5/16"-18 x 2-1/2" Soc. Fil. Hd.	4
47	SC-40-15	Cap Screw - 5/16"-18 x 1-1/4" Soc. Fil. Hd. (Prior to Serial #1053568)	4
48	WL-3-44	Lock Washer - 5/16" x .125" x .078"	4
49	P-61228-1	Carrier - Bearing	1
50	M-61227	Spacer - Bearing	1
51	BB-15-16	Ball Bearing - Fafnir #9106PP	1
52	M-61229-2	Key	1
53	P-61230	Sleeve - Square Drive	1
54	R-61226-1	Hub - Attachment	1
55	OG-3-30	Oiler	1
56	M-4202-1	Screw - Thumb	1
57	P-24799-1	Plug - Attachment Hole	1
58	M-61279	Screw - Special (L. H. Thread)	1
59	WL-3-44	Lock Washer - 5/16" x .125" x .078"	1
	P-60465	Planetary Oil Pump Assy. (Incls. items #20, 21, 22, 23, 24, 25, 26, 29, 30, 31, 32, 33 & 34)	1
	P-61236-2	Attachment Hub Assy. (Incls. items #43, 44, 45, 46, 48, 49, 50, 51, 52, 53, 54, 58 & 59)	1

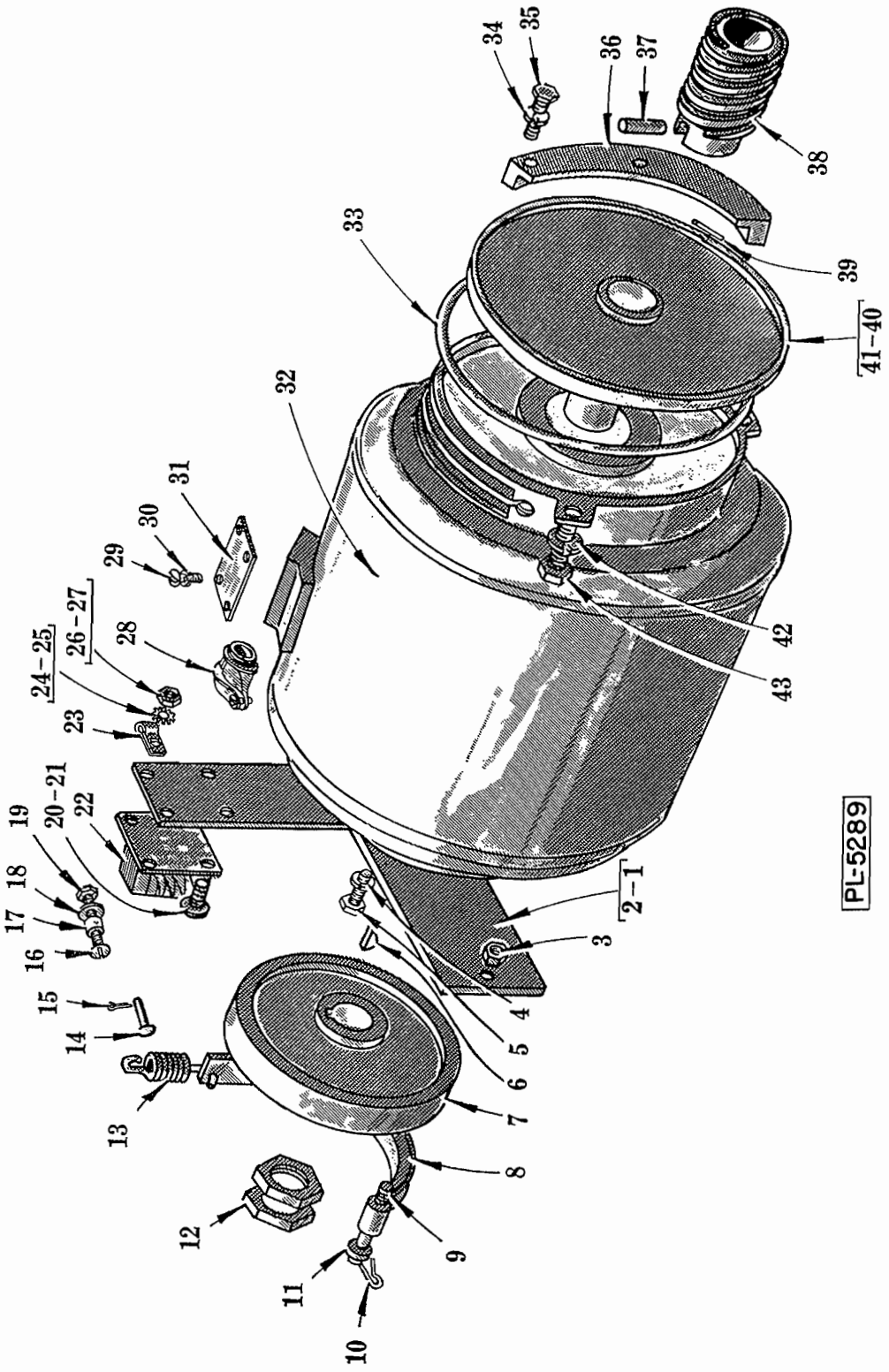

MOTOR AND BRAKE UNIT

MOTOR AND BRAKE UNIT

ILLUS. PL-5289	PART NO.	NAME OF PART	AMT.
1	P-24771	Brake Mounting Bracket Assy.	1
*2	P-62435	Brake Mounting Bracket Assy.	1
3	NS-32-7	Stop Nut - 1/4"-20 "Flexloc"	1
4	WL-3-43	Lock Washer - 5/16" x .117" x .056"	4
5	SC-36-28	Fin. Bolt - 5/16"-18 x 1-1/4" Hex Hd.	4
6	KW-3-5	Key - #405 Woodruff	1
7	R-60777	Drum - Motor Brake	1
8	P-24776	Brake Band Assy.	1
9	M-24774	Stud - Brake Band	1
10	PC-3-32	Cotter Pin - 3/32" x 1/2"	1
11	WS-3-20	Washer	1
12	V-6566	Nut - Lock	2
13	M-24775	Spring - Motor Brake	1
14	M-63201	Pin - Solenoid Clevis	1
15	PC-3-16	Cotter Pin - 1/16" x 3/8"	1
*16	SC-7-88	Mach. Screw - #10-24 x 1-1/2" Rd. Hd.	1
*17	V-6750	Bushing - Insulator	2
*18	WS-2-21	Washer	2
*19	NS-9-21	Mach. Nut - #10-24 Hex	2
20	SC-7-41	Mach. Screw - #8-32 x 3/8" Rd. Hd.	4
*21	SC-8-68	Mach. Screw - 1/4"-20 x 1/2" Rd. Hd.	4
22	P-23926	Solenoid - Brake (Give Elec. Spec.)	1
23	M-24167	Clamp - Lead Support	1
24	WL-7-6	Lock Washer - #8 Ext. Shakeproof	4
*25	WL-7-15	Lock Washer - 1/4" Ext. Shakeproof	4
26	NS-9-9	Mach. Nut - #8-32 Hex	4
*27	NS-13-1	Full Nut - 1/4"-20 Hex Fin.	4
28	FE-2-35	Connector - Straight (3/4" Male Thd. x 3/4" Flex Cnd.)	1
29	SC-7-40	Mach. Screw - #8-32 x 5/16" Rd. Hd.	4
30	WL-3-15	Lock Washer - #8 x .047" x .031"	4
31	M-24726	Cover - Motor Junction Box	1
32	--------	Motor (see separate Motor Parts Sheet)	1
33	R-67500-24	"O" Ring - Bearing Bracket	1
34	WL-3-42	Lock Washer - 5/16" x .047" x .078"	2
35	SC-36-27	Fin. Bolt - 5/16"-18 x 1" Hex Hd.	2
36	P-24610	Guide - Oil Flinger	1
*37	RP-2-6	Rollpin - 1/4" Dia. x 1" Lg.	1
*38	M-24298-1	Worm - Drive (5T)	1
39	RP-2-4	Rollpin - 3/16" Dia. x 1-5/8" Lg.	1
40	P-24257-1	Flinger and Hub Assy. (30-60 Cy.)	1
*41	P-24257-2	Flinger and Hub Assy.	1
42	WL-4-12	Lock Washer - 1/2" x .170" x .099"	3
43	SC-36-98	Fin. Bolt - 1/2"-13 x 1-1/4" Hex Hd.	3
	R-24770	Motor Brake Assy. (30-60 Cy.) (Incls. items #1, 3, 8, 9, 10, 11, 13, 14, 15, 20, 22, 23, 24 & 26)	1
	*R-62456	Motor Brake Assy. (Incls. items #2, 3, 8, 9, 10, 11, 13, 16, 17, 18, 19, 21, 22, 23, 25 & 27)	1

* 50 Cy. ONLY

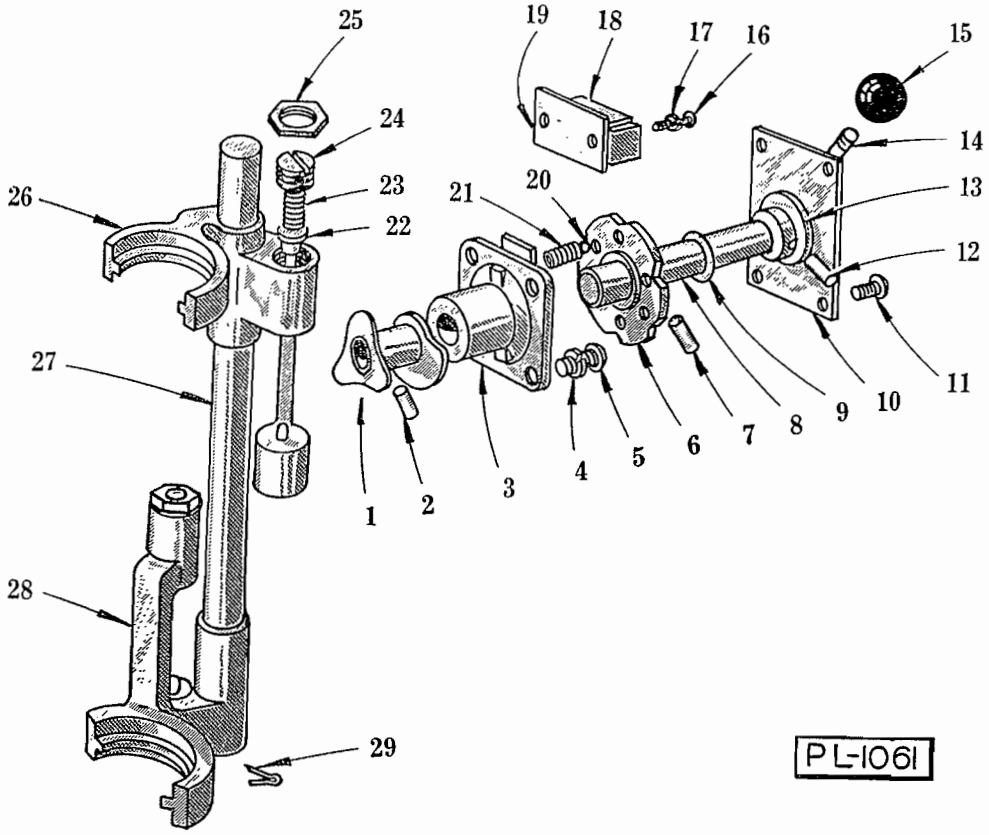

SHIFTING UNIT

ILLUS. PL-1061	PART NO.	NAME OF PART	AMT.
1	P-24249	Gear Shift Cam Assy.	1
2	RP-2-5	Rollpin - 1/4" Dia. x 7/8" Lg.	1
3	P-60359	Bracket - Gear Shift	1
4	WL-3-44	Lock Washer - 5/16" x .125" x .078"	4
5	SC-38-14	Cap Screw - 5/16"-18 x 3/4" Fil. Hd.	4
6	M-60394	Hub and Cam Assy.	1
7	RP-2-10	Rollpin - 3/16" Dia. x 1" Lg.	1
8	M-60400	Shaft - Gear Shift	1
9	R-67500-6	"O" Ring - Shifter Shaft	1
10	R-60452	Plate - Name	1
11	SC-10-32	Mach. Screw - #8-32 x 3/8" Truss Hd.	4
12	RP-2-3	Rollpin - 3/16" Dia. x 1-1/4" Lg.	1
13	M-60395	Grommet - Gear Shift	1
14	M-60469	Handle and Hub Assy.	1
15	M-60468	Knob - Gear Shift	1
16	SC-9-45	Mach. Screw - #6-32 x 1" Rd. Hd.	2
17	WL-3-7	Lock Washer - #6 x .040" x .025"	2
18	M-60470	Switch - Micro	1
19	M-60679	Insulator - Micro Switch	1
20	BA-2-18	Ball - 3/8" Dia.	2
21	V-7009	Spring	2
22	M-24230	Plunger - Shifting Yoke	4
23	M-24233	Spring - Shifting Plunger	4
24	M-60723	Screw - Shifting Plunger	4
25	M-24232	Nut - Plunger Screw	3
26	R-24229	Yoke - Upper Shifting	1
27	M-24227	Shaft - Shifter	1
28	R-24228	Yoke - Lower Shifting	1
29	PC-3-24	Cotter Pin - 1/16" x 1-1/2"	1

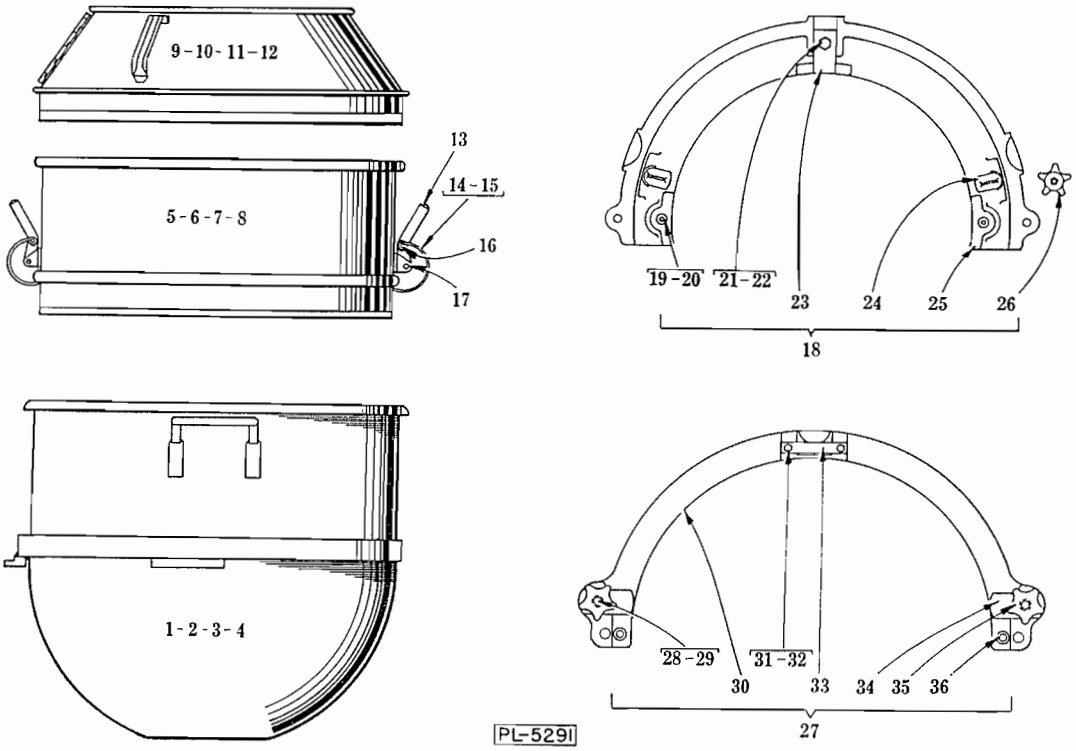

BOWLS AND EQUIPMENT

ILLUS. PL-5291	PART NO.	NAME OF PART	AMT.
1	S-66465	Bowl - 80 Qt.	1
2	S-66461	Bowl - 60 Qt.	1
3	S-66457	Bowl - 40 Qt.	1
4	S-66450	Bowl - 30 Qt.	1
5	P-8569-2	Extension Assy. 80 Qt. (Flange Top) Bowl	1
6	P-8569-1	Extension Assy. 80 Qt. (Rolled Rim) Bowl	1
7	P-9747	Extension Assy. 60 Qt. Bowl	1
8	P-7985	Extension Assy. 40 Qt. Bowl	1
9	T-75111-1	Splash Cover Assy. - 80 Qt.	1
10	S-75169-1	Splash Cover Assy. - 60 Qt.	1
11	R-8038	Splash Cover Assy. - 40 Qt.	1
12	S-75131-1	Splash Cover Assy. - 30 Qt.	1
13	M-11881	Handle - Clamp (80 Qt.)	2
14	P-62234	Spring - Clamp (80 Qt.) (Flange Top) Bowl	2
15	M-8570	Spring - Clamp (80 Qt.) (Rolled Rim) Bowl	2
16	RP-2-7	Rollpin - 3/16" Dia. x 1-1/8" Lg. (For item #5 or 6)	2
17	RP-2-35	Rollpin - 3/16" Dia. x 5/8" Lg. (For item #5 or 6)	2
18	M-24653-1	30 Qt. & 40 Qt. Adapter Sub-Assy. Unit (Incls. items #19 thru 26)	1
19	WL-4-18	Lock Washer - 5/8" x .201" x .126"	2
20	V-7629	Stud - Bowl Locating	2
21	WL-4-12	Lock Washer - 1/2" x .170" x .099"	1
22	SC-62-37	Fin. Bolt - 1/2"-13 x 1" Hex Hd.	1
23	V-7624	Retainer - Bowl	1
24	M-8100-1	Stud - Clamp	2
25	R-7841-1	Adapter (80 to 40 Qt. and 80 to 30 Qt.)	1
26	M-22156-1	Knob - Clamp Stud	2
27	M-61033-1	60 Qt. Adapter Sub-Assy. Unit (Incls. items #28 thru 36)	1
28	M-22196	Bolt - Bowl Lock	2
29	WL-4-12	Lock Washer - 1/2" x .170 x .099"	2
30	S-65791-1	Adapter (80 to 60 Qt.)	1
31	SC-37-88	Fin. Bolt - 5/16"-18 x 1-1/4" Hex Hd.	2
32	WL-3-42	Lock Washer - 5/16" x .047" x .078"	2
33	M-24289	Retainer - Bowl	1
34	M-65532-1	Clamp - Bowl Adapter	2
35	M-8101-1	Knob - Clamp Stud	2
36	M-24300	Pin - Bowl Locating	2

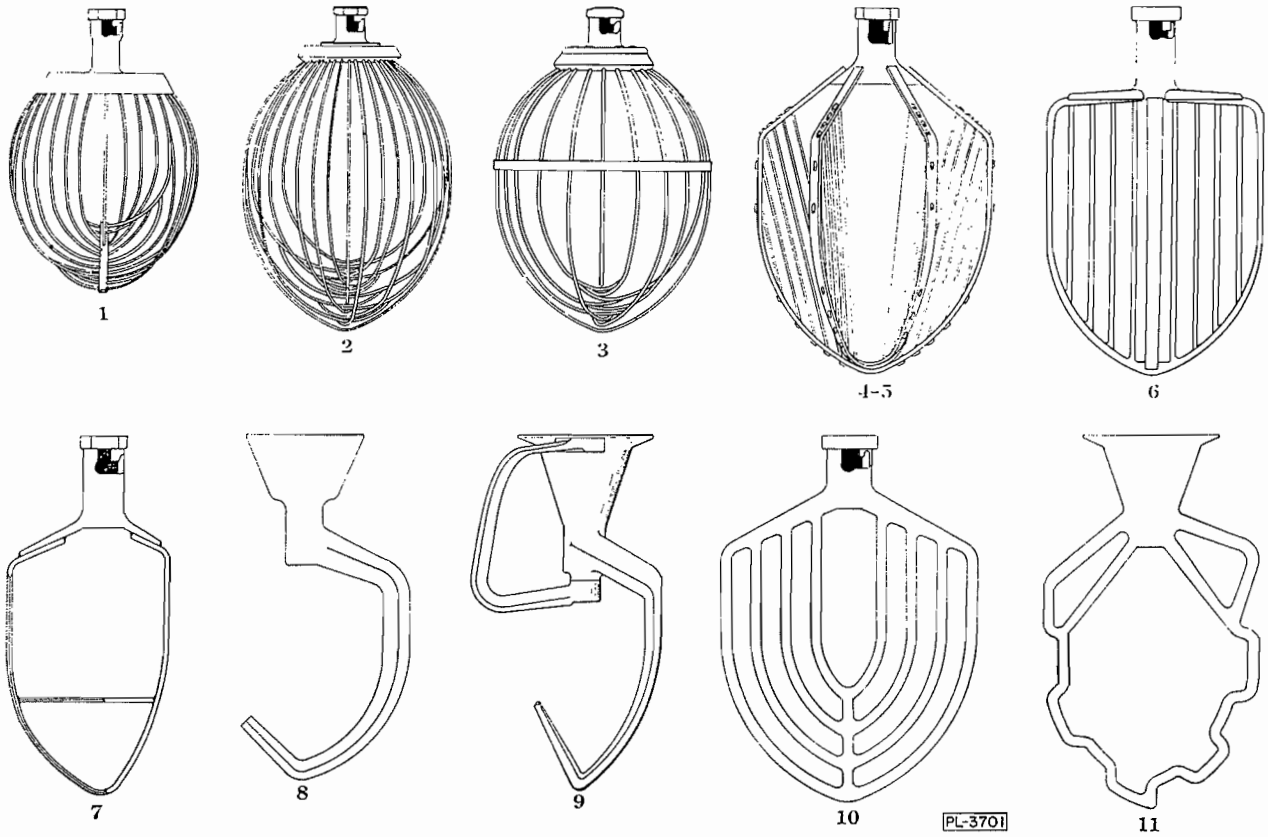

AGITATORS

ILLUS. PL-3701	PART NO. 80 QT.	PART NO. 60 QT.	PART NO. 40 QT.	PART NO. 30 QT.	NAME OF PART	AMT.
1	R-16418-1	--------	--------	--------	KB Spiral Whip ----------	1
2	S-23522-1	S-24900-1	S-23591-1	R-10327-1	D Wire Whip ----------	1
3	S-60429	R-60090	S-60132	R-72871	I Wire Whip ----------	1
4	S-22467	S-24919	S-22474	--------	C Six Wing Whip ----------	1
5	--------	--------	--------	R-22473	C Four Wing Whip (Not shown)	1
6	R-15320	--------	--------	--------	J Four Wing Beater -------	1
7	S-68097	S-68096	S-68095	R-68822	P Pastry Knife ----------	1
8	P-8154	S-60048	S-80693	P-10328	E Dough Arm ----------	1
9	R-22255	--------	--------	--------	EC Dough Arm ----------	1
10	S-23490	S-24308-1	T-23620	S-60052-1	B Flat Beater ----------	1
11	S-9875-2	S-60069	R-8400	R-10326	S Sweet Dough Arm ------	1
	R-8077	--------	--------	--------	G Six Wing Whip --(Not shown)	1