INSTRUCTIONS



LXi SERIES DISHWASHER

LXi SERIES DISHWASHER

ENERGY STAR

MODELS

LXiC	*ML-130016*
LXiH	*ML-130017*
LXiGC	*ML-130018*
LXiGH	*ML-130019*
LXiPRC	*ML-130178*
LXiPRGC	*ML-130179*

HOBART

701 S. RIDGE AVENUE
TROY, OHIO 45374-0001

937 332-3000

www.hobartcorp.com

FORM 34779 Rev. D (October 2012)

© HOBART CORPORATION, 2010

TABLE OF CONTENTS

GENERAL 4

INSTALLATION 5

- Unpacking 5
- Location 5
- Leveling 5
- Water Requirements 5
- Plumbing Connections 6
- Electrical Connection 7
- Electrical Data 7
- Detergent and Rinse Aid 8
- Operator Programming Mode 9
- Chemical Sanitizer (LXiC, LXiGC, LXiPRC, and LXiPRGC) 12

OPERATION 12

- Before First Use 12
- Controls 12
- Operating the LXi Dishwasher 13
- Diagnostic Messages 14
- Wash/Rinse Cycle Times (LXi) 14
- Wash/Rinse Cycle Times (LXiG) 14
- Preparation 15
- Do's and Don'ts For Your New Hobart Dishwasher 16

CLEANING 17

- Priming Chemical Pumps 18

MAINTENANCE 19

- Deliming 19
- Lubrication 19

TROUBLESHOOTING 20

Installation, Operation and Care of LXi SERIES DISHWASHERS

SAVE THESE INSTRUCTIONS



GENERAL

The LXi Series dishwashers are fully automatic, front-loading dishwashing machines that are capable of 30 racks per hour.

All LXi Series dishwashers shut down automatically 4 hours after last use to conserve energy.

All LXiH and LXiGH dishwashers include *Sense-A-Temp*™ to insure proper hot water temperature during rinse.

Standard equipment includes two 20" x 20" racks, electronic controls, drain pump, fill hose and drain hose.

MODEL	DESCRIPTION
LXiC, LXiGC,LXiPRC LXiPRGC	Fresh water rinse; low-temperature, chemical-sanitizing models for use with 6% sodium hypochlorite solution (bleach) as the sanitizing agent*. Note: If 8.40% bleach is to be used, contact Hobart Service to change the sanitizer pump settings. (Charges will apply)
LXiH, LXiGH	Fresh water rinse with a built-in 70°F rise booster heater. This allows an incoming water temperature of 110°F.

* - Sanitizing agent must be used in accordance with the EPA-registered label use instructions.

INSTALLATION

UNPACKING

Immediately after unpacking the dishwasher, check for possible shipping damage. If this machine is found to be damaged, save packaging material and contact the carrier within 15 days of delivery.

LOCATION

Prior to installation, verify that the electrical supply agrees with the specifications on the machine data plate, which is located on the top of the door.

Steam generated from normal operation may escape from the door. Wood, laminates, veneers, etc. are unsuitable materials for use in areas exposed to dishwasher steam and detergents. Stainless steel or other moisture-resistant shields are recommended for surfaces adjacent to LXi sides and top.

LEVELING

The machine must be level to operate properly. Place the dishwasher in its operating location. Level the machine before any connections are made. Using a carpenter's level placed diagonally on the rack tracks, level the machine front to back and side to side by threading the adjustable feet in or out. After leveling the machine, cover the exposed threads of the adjustable feet with black rubber tubing supplied. (See separate instructions furnished with machine.)

WATER REQUIREMENTS

Proper water quality can improve warewashing performance by reducing spotting, lowering chemical supply costs, enhancing effectiveness of labor and extending equipment life. Local water conditions vary from one location to another. The recommended proper water treatment for effective and efficient use of this equipment will also vary depending on the local water conditions. Ask your municipal water supplier for details about local water specifics prior to installation.

Recommended water hardness is 3 grains of hardness per gallon or less. Chlorides must not exceed 50 parts per million. Water hardness above 3 grains per gallon should be treated by a water conditioner (water softener or in-line treatment). Water treatment has been shown to reduce costs associated with machine cleaning, reduce deliming of the dishwasher, reduce detergent usage and reduce corrosion of metallic surfaces in the booster water heater and dishwasher.

Sediment, silica, chlorides or other dissolved solids may lead to a recommendation for particulate filtration or reverse osmosis treatment.

If an inspection of the dishwasher or booster heater reveals lime buildup after the equipment has been in service, in-line treatment should be considered. If recommended, follow suppliers installation and use instructions. Contact your local Hobart Service Office for specific recommendations.

Water Supply

A water hammer arrestor (meeting ASSE-1010 Standard or equivalent) should be installed (supplied by others) in the common water supply line at the service connection.

Water must be proper hardness. Higher hardness may cause excessive formation of lime scale.

The plumber connecting this machine is responsible for making certain that water lines are thoroughly flushed out before connecting to the dishwasher. This "flush-out" is necessary to remove all foreign matter, such as chips (resulting from cutting or threading of pipes) pipe joint compound from the lines; or, if soldered fittings are used, bits of solder or cuttings from the tubing. Debris, if not removed, may lodge in the dishwasher's plumbing components and render them inoperative. Manual valves or solenoid valves fouled by foreign matter and any expenses resulting from this fouling, are NOT the responsibility of the manufacturer.

Water supply requirements are as follows:

MODEL	TEMPERATURE	FLOWING PRESSURE
LXiC, LXiGC, LXiPRC, LXiPRGC	140°F Minimum	15 to 25 psi
LXiH, LXiGH	110°F Minimum	15 to 25 psi

If flowing pressure exceeds 25 psi, a pressure reducing-valve (not supplied) must be installed in the supply line.

NOTICE The water pressure regulator must have a relief bypass. Failure to use the proper type of pressure regulator may result in damage to the unit.

If flowing pressure is less than 15 psi, improper machine operation may result.

A manual shutoff valve (not supplied) should be installed upstream of the fill hose to accommodate servicing the machine.

It is recommended that a line strainer (not supplied) be installed in the supply line between the manual shutoff valve (not supplied) and the connection point on the machine. Make plumbing connections with ½" minimum copper piping OD (¾" recommended), with a ¾" male garden hose fitting (not supplied). See installation diagrams, pages 10-11.

NOTE: Iron in the water supply can cause staining. An iron filter is recommended for iron concentration greater than 0.1 part per million. High chloride levels in the water supply can cause pitting. A chloride removal system is required if levels exceed 50 parts per million.

PLUMBING CONNECTIONS

⚠ WARNING Plumbing connections must comply with applicable sanitary, safety, and plumbing codes.

Drain

A drain hose, ¾" diameter and 6' long, is provided. This should be securely plumbed into the sink drain. Use care not to kink hose. See installation diagrams in this manual. Drain must have a minimum flow capacity of 4 gallons per minute.

ELECTRICAL CONNECTION

⚠ WARNING Electrical and grounding connections must comply with the applicable portions of the National Electrical Code and/or other local electrical codes.

⚠ WARNING Disconnect the electrical power to the machine and follow lockout/tagout procedures.

ELECTRICAL DATA

Complied in accordance with the National Electrical Code NFPA-70, latest addition.

NOTE: For supply connections, use copper wire only rated at 90°C minimum.

Model	Volts/Hertz/Phase	Minimum Supply Circuit Conductor Ampacity	Maximum Protective Device Ampacity
LXiC LXiGC LXiPRC LXiPRGC	120/60/1	20	20
	208-240/60/1		
	120/208-240(3W)/60/1*		
LXiH LXiGH	208/240/60/1	50	50
	120/208-240(3W)/60/1*		
	208-240/60/3	35	35
	380-400/60/3	25	25
	480/60/3	20	20
LXiH	220-240/50/1	50	50

*The (3W) systems require three power wires that include a current carrying neutral. An additional fourth wire must be provided for machine ground.

Refer to the data plate on the door handle of the machine and the label inside the control drawer at the power connection for proper selection.

Use stranded copper wire suitable for at least 90°C.

Connection Method

1. Remove the cover plate at the upper right in the back of the machine (Fig. 1). A hole for 1" trade size conduit is supplied in the cover plate.

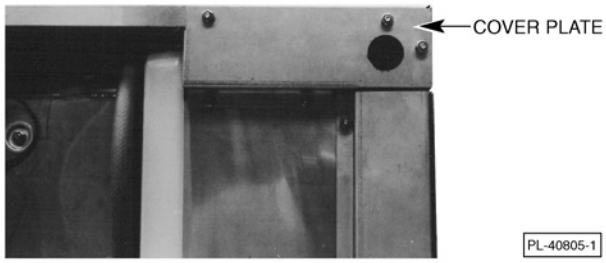

Fig. 1

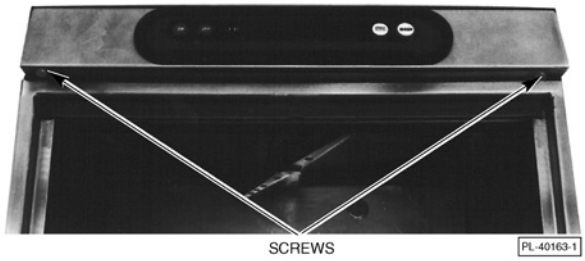

Fig. 2

2. Remove the two screws (Fig. 2) securing the controls drawer and open it fully.
3. Install 1" trade conduit and fitting to the cover plate. A 90 degree fitting is recommended. Leave at least four feet of electrical line between wall connection and cover plate connection. This allows machine to be pulled away from the wall for cleaning.
4. Feed wires over top of tank to individual strain reliefs at rear of drawer. At least 32" and not more than 36" of the required wire size must extend from the end of the conduit fitting.
5. Reinstall the cover plate (three screws, Fig. 1).
6. For all wires, run one wire through each individual strain relief. (Four strain reliefs are provided.) Make electrical connections according to wiring diagram supplied with the machine and secure wires to the machine service connection. Keep excess wire in the drawer to a minimum.
7. Tighten the set screw on the strain relief(s) until they bottom out (on the shoulder of the body).
8. Close the control drawer and replace the screws.

DETERGENT AND RINSE AID

Use only commercial-grade detergents recommended by your chemical professional. Do not use detergents formulated for residential dishwashers.

The detergent and rinse aid pump "ON" times are factory-set. If adjustments are required, contact your local Hobart Service Office.

Place the detergent and rinse aid containers (which are obtained from an independent supplier) in a location where the delivery tubes will reach them.

Remove the detergent bottle cap and put the *red* delivery tube in the detergent container.

Remove the rinse aid bottle cap and place the *blue* delivery tube in the rinse aid container.

Be sure to push the delivery tube standpipes completely to the bottom of each container. Check to make sure there are no obstructions or kinks in the delivery tubes.

OPERATOR PROGRAMMING MODE

The Operator Programming mode allows changes to be made from factory settings to the chemical pumps' operation. This includes the Detergent and Rinse Aid pumps, but does not apply to the Sanitizer pump on the LXiC and LXiGC models. The Detergent and/or Rinse Aid pumps can be turned off by entering this programming mode. Disabling this feature will eliminate the alarm activation if no chemical is sensed and turn the chemical pumps off. Machines not equipped with Hobart chemical pumps do not have this programming mode.

1. To being the process start with the machine off.
2. First press the ON key, then **immediately** press and hold the OFF key to enter the user programming mode. While the OFF key is being pressed the display will begin counting from "11" going up to "99". Hold the OFF key until the counting ends and "WASH" and "Pr" is displayed on the LED panel (Fig. 3). This indicates you are now in the programming mode. (The OFF key must be pressed prior to the count reaching "44".)



Fig. 3

NOTE: If the "WASH" and "Pr" icons do not appear and the machine is equipped with the chemical pumps, turn the unit off and try steps 1 through 3 again.

3. Press the WASH key to advance into the programming mode.

NOTE: The machine will shut off in 15 seconds if either the WASH key or the OFF key are not pressed. To regain access to this mode follow steps 1 through 3.

4. The "DETERGENT" icon will now display either "On" or "OF" (Figs. 4 and 5). Pressing the WASH key in either the Detergent or Rinse Aid mode changes the selection from "On" to "OF". When the desired change is made press the OFF key to advance to the next mode.



Fig. 4



Fig. 5

NOTE: "On" indicates the Detergent or Rinse Aid pump will run and be sensed. "OF"" indicates the Detergent or Rinse Aid pump is disabled, meaning it will not run or be sensed.

5. Pressing the OFF key advances to the Rinse Aid mode showing "On" or "OF". Press the WASH key to change to desired setting.
6. When desired changes are completed allow the machine to turn itself off. It will do this automatically after 15 seconds if no keys are depressed. The machine has saved changes and is ready for use.

⚠ WARNING **Do not pre-mix RINSE agent and sodium hypochlorite (liquid bleach). Mixing may cause hazardous gas to form.**

NOTICE Required flowing water pressure to the dishmachine is 20 ± 5 PSIG. If pressures higher than 25 PSIG are present, a pressure regulating valve must be installed in the water line to the dishmachine (by others).

Important: The sodium hypochlorite (liquid bleach) container should be placed no higher than 10" above floor.

If bleach container is to be placed in cabinet adjacent to machine, a 1/2" dia. hole is required in the cabinet to run bleach supply line.

Use only 6% or 8.4% sodium hypochlorite (liquid bleach) as sanitizing chemical to insure proper operation of dishmachine. If 8.4% is to be utilized, contact Hobart Service to change the sanitizer pump settings.

Certain materials including silver plate, aluminum and pewter are attacked by sodium hypochlorite (liquid bleach).

NOTES:

1. All vertical machine dimensions taken from floor may be increased by 1".
2. Moist air escapes from the door.
   Use only moisture resistant materials adjacent to dishmachine sides and top.
3. A vent hood is not recommended above the undercounter dishmachine since it does not produce excessive vapors.

PLUMBING NOTES:

1. Water hammer arrestor (meeting ASSE-1010 standard or equivalent) to be supplied (by others) in common water supply line at service connection.
2. Recommended water hardness to be 3 grains or less for best results.
3. Minimum water conductivity required - 30 micro-mhos/cm.
4. If drain hose is looped above a sink, the loop must not exceed 38" AFF.

CONNECTION INFORMATION
(AFF = ABOVE FINISHED FLOOR)

LEGEND

E1 ELECTRICAL CONNECTION: 1-3/8" DIA. HOLE FOR 1" TRADE SIZE CONDUIT; 31-3/4" AFF.

P1 SINGLE FILL AND RINSE CONNECTION: 3/4" FEMALE GARDEN HOSE FITTING ON 6' LONG HOSE SUPPLIED WITH MACHINE; 140°F WATER MIN. FOR LXiC AND LXiPRC, 110°F WATER MIN. FOR LXiH, 1-1/2" AFF.

P2 DRAIN CONNECTION: 3/4" MPT FITTING WITH 6' LONG HOSE SUPPLIED WITH MACHINE; 3-9/16" AFF.

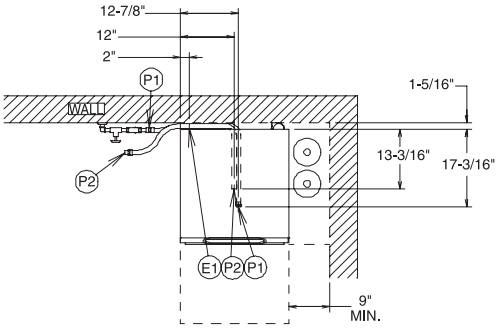

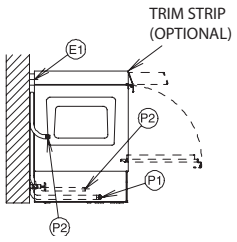

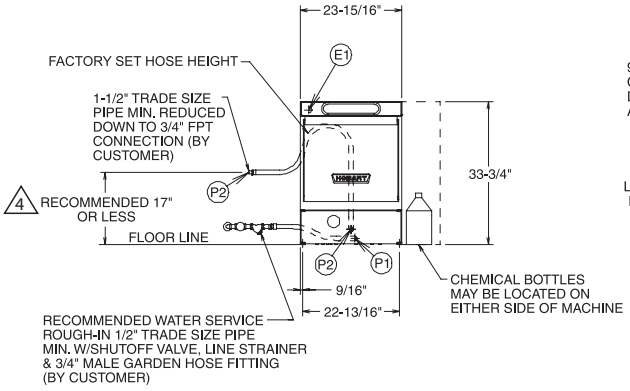

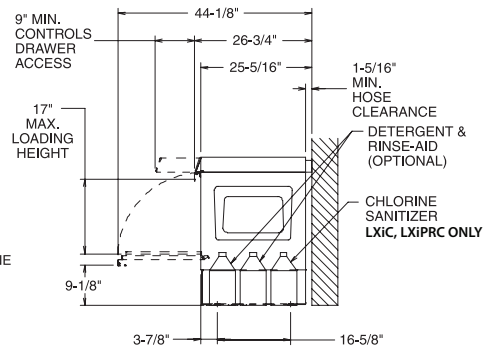

MACHINE TYPE & SPECIFICATION	RATED AMPS	MIN SUPPLY CKT CONDUCT AMPACITY	MAX PROTECTIVE DEVICES
LXiC, LXiPRC (120/60/1) USE 90°C STRANDED COPPER WIRE ONLY.	15.4	20	20
LXiC, LXiPRC (120/208-240(3W)/60/1*) LXiC, LXiPRC (208-240/60/1) USE 90°C STRANDED COPPER WIRE ONLY.	13.6	20	20
LXiH (120/208-240(3W)/60/1*) LXiH (208-240/60/1) USE 90°C STRANDED COPPER WIRE ONLY.	37.7	50	50
ELECTRICAL OPTIONS BELOW ARE NON STANDARD VOLTAGES AVAILABLE AT EXTRA COST. CONSULT FACTORY FOR PRICING AND LEAD TIME.			
LXiH 208-240/60/3	29.5	35	35
480/60/3	14.8	20	20
220-240/50/1	38.1	50	50
380-400/60/3	17.1	25	25

* THIS SYSTEM REQUIRES THREE POWER WIRES WHICH INCLUDES A CURRENT CARRYING NEUTRAL, AN ADDITIONAL FOURTH WIRE MUST BE PROVIDED FOR MACHINE GROUND.

ACCESSORY CORD KITS AVAILABLE FOR ALL MACHINES

SHIPPING WEIGHTS (LBS)	LXiC, LXiPRC	LXiH
NET WEIGHT OF MACHINE	190 lbs.	210 lbs.
DOMESTIC SHIPPING WEIGHT	235 lbs.	255 lbs.

⚠ WARNING **Electrical and grounding connections must comply with the applicable portions of the National Electrical Code and/or other local electrical codes.**

Plumbing connections must comply with applicable sanitary, safety and plumbing codes. Drain and fill line configurations vary, some methods are shown on this drawing.

INSTALLATION DIAGRAM (LXiC, LXiPRC & LXiH)

⚠ WARNING **Do not pre-mix RINSE agent and sodium hypochlorite (liquid bleach). Mixing may cause hazardous gas to form.**

NOTICE Required flowing water pressure to the dishmachine is 20 ± 5 PSIG. If pressures higher than 25 PSIG are present, a pressure regulating valve must be installed in the water line to the dishmachine (by others).

Important: The sodium hypochlorite (liquid bleach) container should be placed no higher than 10" above floor.

If bleach container is to be placed in cabinet adjacent to machine, a 1/2" dia. hole is required in the cabinet to run bleach supply line.

Use only 6% or 8.4% sodium hypochlorite (liquid bleach) as sanitizing chemical to insure proper operation of dishmachine. If 8.4% is to be utilized, contact Hobart Service to change the sanitizer pump settings.

Certain materials including silver plate, aluminum and pewter are attacked by sodium hypochlorite (liquid bleach).

NOTES:

1. All vertical machine dimensions taken from floor may be increased by 1".
2. Moist air escapes from the door.
   Use only moisture resistant materials adjacent to dishmachine sides and top.
3. A vent hood is not recommended above the undercounter dishmachine since it does not produce excessive vapors.

PLUMBING NOTES:

1. Water hammer arrestor (meeting ASSE-1010 standard or equivalent) to be supplied (by others) in common water supply line at service connection.
2. Recommended water hardness to be 3 grains or less for best results.
3. Minimum water conductivity required - 30 micro-mhos/cm.

4. If drain hose is looped above a sink, the loop must not exceed 38" AFF.

CONNECTION INFORMATION
(AFF = ABOVE FINISHED FLOOR)

LEGEND

E1 ELECTRICAL CONNECTION: 1-3/8" DIA. HOLE FOR 1" TRADE SIZE CONDUIT; 31-3/4" AFF.

P1 SINGLE FILL AND RINSE CONNECTION: 3/4" FEMALE GARDEN HOSE FITTING ON 6' LONG HOSE SUPPLIED WITH MACHINE; 140°F WATER MIN. FOR LXiGC, 110°F WATER MIN. FOR LXiGH, AND LXiPRGC 1-1/2" AFF.

P2 DRAIN CONNECTION: 3/4" MPT FITTING WITH 6' LONG HOSE SUPPLIED WITH MACHINE; 3-9/16" AFF.

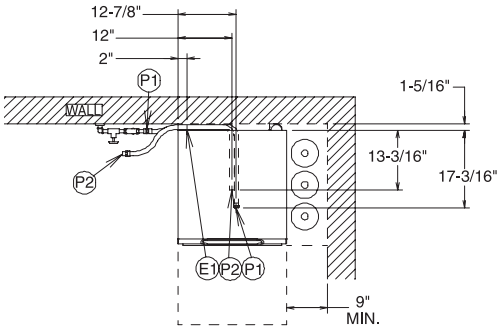

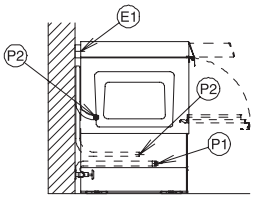

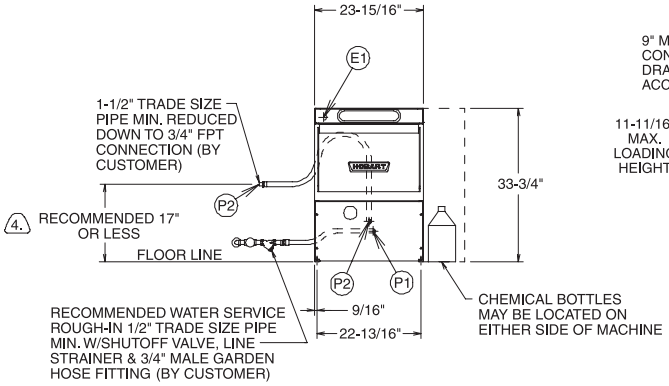

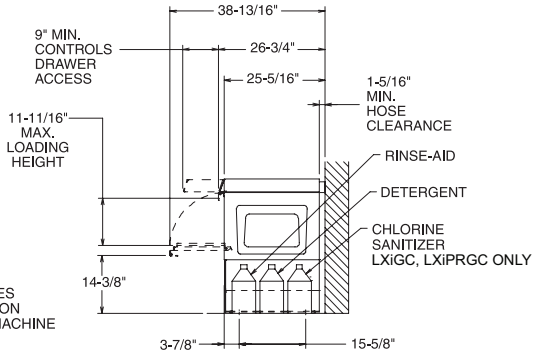

MACHINE TYPE & SPECIFICATION	RATED AMPS	MIN SUPPLY CKT CONDUCT AMPACITY	MAX PROTECTIVE DEVICES
LXiGC, LXiPRGC (120/60/1) USE 90°C STRANDED COPPER WIRE ONLY.	15.4	20	20
LXiGC, LXiPRGC (120/208-240(3W)/60/1*) LXiGC, LXiPRGC (208-240/60/1) USE 90°C STRANDED COPPER WIRE ONLY.	13.6	20	20
LXiGH (120/208-240(3W)/60/1*) LXiGH (208-240/60/1) USE 90°C STRANDED COPPER WIRE ONLY.	37.7	50	50
ELECTRICAL OPTIONS BELOW ARE NON STANDARD VOLTAGES AVAILABLE AT EXTRA COST. CONSULT FACTORY FOR PRICING AND LEAD TIME.			
LXiGH 208-240/60/3 480/60/3 220-240/50/1 380-400/60/3	29.5 14.8 38.1 17.1	35 20 50 25	35 20 50 25

* THIS SYSTEM REQUIRES THREE POWER WIRES WHICH INCLUDES A CURRENT CARRYING NEUTRAL, AN ADDITIONAL FOURTH WIRE MUST BE PROVIDED FOR MACHINE GROUND.

ACCESSORY CORD KITS AVAILABLE FOR ALL MACHINES

SHIPPING WEIGHTS (LBS)	LXiGC, LXiPRGC	LXiGH
NET WEIGHT OF MACHINE	194 lbs.	214 lbs.
DOMESTIC SHIPPING WEIGHT	239 lbs.	259 lbs.

⚠ WARNING **Electrical and grounding connections must comply with the applicable portions of the National Electrical Code and/or other local electrical codes.**

Plumbing connections must comply with applicable sanitary, safety and plumbing codes. Drain and fill line configurations vary, some methods are shown on this drawing.

INSTALLATION DIAGRAM (LXiGC, LXiPRGC & LXiGH)

CHEMICAL SANITIZER (LXiC, LXiPRC, LXiPRGC, AND LXiGC)

NOTICE Items such as pewter, aluminum and silver will be attacked by sodium hypochlorite (bleach). Therefore, chemical-sanitizing dishwashers should not be used to wash such items.

On model LXiC and LXiPRC only, the chemical sanitizer pump is factory-set for use with 6% sodium hypochlorite solution.

NOTICE If 8.40% sodium hypochlorite solution is to be used, contact your local Hobart Service Office.

Place a 1-gallon bottle of 6% or 8.40% sodium hypochlorite solution (bleach) in a suitable location no higher than 10 inches off the floor. Do not pre-mix sanitizing solution with water or any other liquid.

⚠ WARNING **Never premix a wetting agent with the sanitizing solution. Mixing may cause hazardous gas to form.**

Remove the sanitizer bottle cap and place the white delivery tube in the sanitizer container. Be sure to push the delivery tube standpipe completely to the bottom of the container. Check to make sure there are no obstructions or kinks in the delivery tube.

The LXi Series Dishwasher has an auto-prime cycle. (See Operating the LXi Dishwasher.)

Frequently check your sanitizer bottle to make sure there is a sufficient chemical supply.

NOTE: CHECK SANITIZER CONCENTRATION: For models LXiPRC, LXiPRGC, PuriRinse switch must be OFF. Verify that there is sufficient chemical supply. Run cycle and use test strips on wetted surface of glasses after cycle is complete. If concentration is below minimum required, contact your local Hobart Service office.

OPERATION

NOTICE Items such as pewter, aluminum and silver will be attacked by sodium hypochlorite (bleach). Therefore, chemical-sanitizing dishwashers should not be used to wash such items.

If your dishwasher is a chemical-sanitizing model, frequently check the sanitizer bottle to make sure there is a sufficient chemical supply.

BEFORE FIRST USE

This machine must be cleaned after installation and before being put into operation. (See Cleaning.)

CONTROLS



Fig. 6

NOTE: Consult your local health official regarding operation of this machine during a boil water advisory.

OPERATING THE LXi DISHWASHER

DO THIS	DISPLAY SHOWS	REMARKS
Press ON.	Model number.	Dishwasher performs self-check. This takes 5-10 seconds.
	FILL lit and sump temperature displayed when machine is filling.	Dishwasher fills with water. When filled, pump turns on for 10 seconds. If door is opened during fill cycle, fill will stop. After door is closed, the process continues where it stopped.
	Fill flashes when booster is preheating on model LXiH. This preheat could take up to 8 minutes.	If WASH is pressed during a fill cycle, a wash cycle will begin at end of fill cycle. If beeper sounds and machine will not fill, turn circuit breaker off, then on, and try again. If problem persists, contact your local Hobart Service Office.
	During fill, sump temperature is displayed.	When filled, machine will maintain an idle state. Heat is maintained in both booster and/or sump.
Open door; slide rack of dishes into dishwasher and add detergent. Close door.	Sump temperature.	If your Model LXi Series is equipped with the optional detergent pump, detergent will be added automatically during wash cycle.
Press WASH.	WASH lit; sump temperature displayed during wash cycle.	Machine initiates a wash and rinse cycle. If door is opened during wash cycle, cycle will restart from beginning when door is closed.
	RINSE lit; rinse temperature displayed during rinse cycle.	If door is opened during rinse or drain cycle, cycle will continue at point where door was opened upon closing door. If OFF is pressed during cycle, machine will drain and shut down.
When cycle is complete, reload machine for next wash/rinse cycle; or, if not in use, machine will maintain idle mode.	Sump temperature.	Machine will drain and shut down if the programmed idle shutdown time is reached.
Turn PuriRinse switch OFF and run cycle to measure sanitizer concentration.		Turn switch back ON to use PuriRinse function for next cycle.
At the end of day, press OFF.	If water is present in the sump, "Pd" is displayed then the display shuts down.	When OFF key is pressed, machine will drain and shut down.

DIAGNOSTIC MESSAGES

In the event of a problem with a temperature probe, the display will flash P1, P2 or P3 every second. The respective heaters will shut down. Other functions will continue to operate normally. Contact your local Hobart Service Office.

Drain and fill error messages are displayed as E0, E1, E2, E3, E4, E5, E6 or E7. In all cases, the dishwasher will terminate current cycle operations, turn off all heat sources and display the message until the OFF button is pressed. (A power drain will not occur when turned off.) (See Troubleshooting.) If problem persists, contact your local Hobart Service Office.

If the control detects that the water level probe is becoming less sensitive, CL and Pr are displayed in the control window. Clean all three water level probes. (See Cleaning.) NOTE: Pr displayed during the post-rinse cycle or PuriRinse cycle of the LXiPR models is normal.

WASH/RINSE CYCLE TIMES (LXi)	**WASH/RINSE CYCLE TIMES (LXiG)**
Spritz 2 Sec.	Spritz 2 Sec.
Wash 85 Sec.**	Wash 55 Sec.**
Drain 22 Sec. Max.*	Drain 22 Sec. Max.*
Dwell 1 Sec.	Dwell 1 Sec.
Rinse 10 Sec.	Rinse 10 Sec.
Dwell 5 Sec.	Dwell 5 Sec.
WASH/RINSE CYCLE TIMES (LXiPRC)	**WASH/RINSE CYCLE TIMES (LXiPRGC)**
Dwell 1 Sec.	Dwell 1 Sec.
Wash 85 Sec.**	Wash 55 Sec.**
Drain 22 Sec. Max.*	Drain 22 Sec. Max.*
Dwell 1 Sec.	Dwell 1 Sec.
Sanitizing Rinse 10 Sec.	Sanitizing Rinse 10 Sec.
Dwell 10 Sec.***	Dwell 10 Sec.***
PuriRinse 9 Sec.***	PuriRinse 9 Sec.***

* Drains off about ¾ to 1 gallon of water, depending on model.

** Maximum wash time may vary, depending on operation voltage and incoming water temperature for 70°F rise.

*** When PR switch is ON only.

PREPARATION

Make sure the coarse (Fig. 7) and fine (Fig. 8) strainers are in place and free of debris. Check both wash arms and rinse arms to make sure they spin freely and are not clogged.

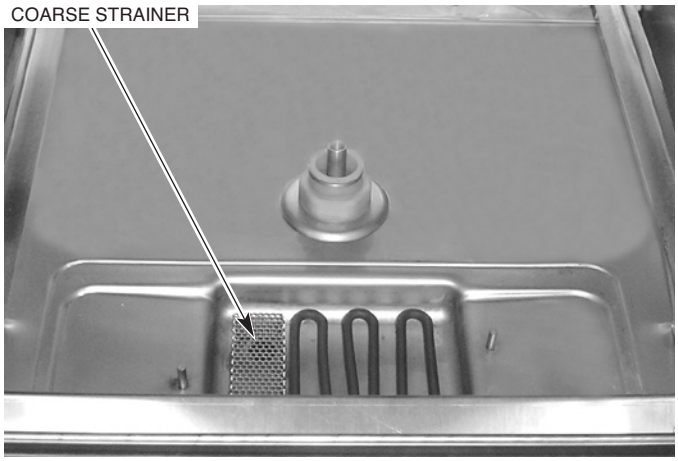

Fig. 7

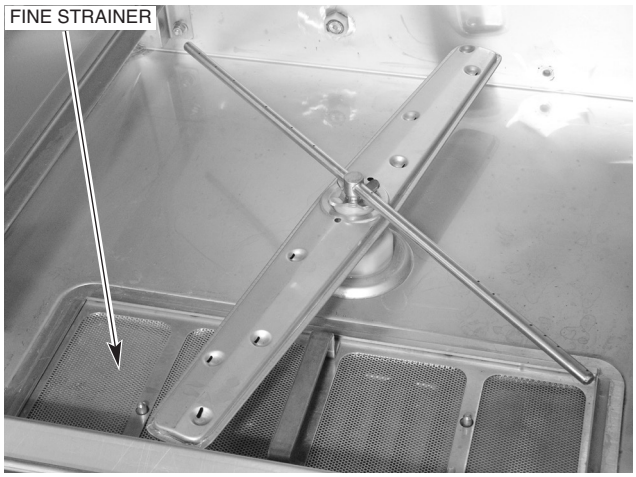

Fig. 8

Dishes must be scraped and/or rinsed to remove food particles and other debris. Never use steel wool on ware to be loaded into the dishwasher. Place dishes in a rack. Do not stack dishes on top of each other as water must have free access to all sides of every dish. Stand plates edgewise in a peg-type rack (Fig. 9). Cups, glasses and bowls should lay upside down in an open or compartment-type rack (Fig. 9). Silverware and other small pieces should lay loosely on the bottom of a flat-bottom rack. See Operator Card (supplied) for other loading patterns. Do not allow foreign objects to enter the unit, especially metallic contaminants such as staples and paper clips.

Check to see if any detergent, rinse aid or sanitizer chemicals need to be replenished. Use only commercial-type detergents, as prescribed by your chemical professional.

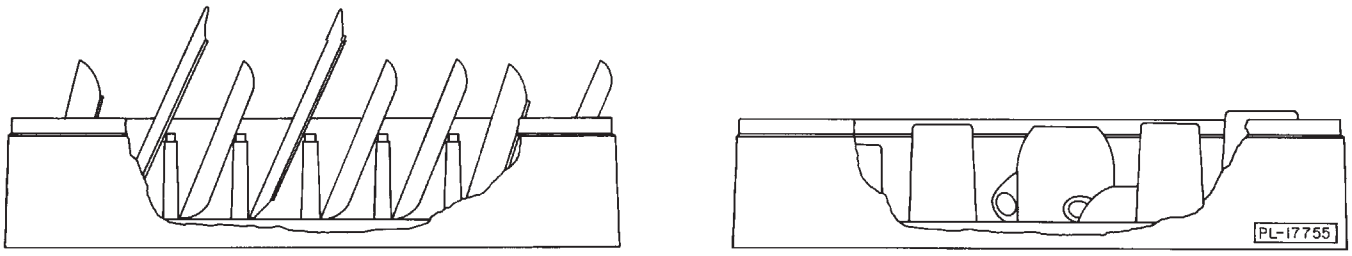

Fig. 9

DO'S AND DON'TS FOR YOUR NEW HOBART DISHWASHER

DO assure proper water hardness.

DO prescrape dishes thoroughly.

DO use only detergents recommended by your chemical professional.

DO, at the end of the day, thoroughly cleanse the machine, rinse and dry. (Leave door open.)

DO closely follow your chemical professional's prescribed deliming schedule.

DO use only products formulated to be safe on stainless steel.

DO NOT oversoften water. (Recommended water hardness is no less than 4 grains per gallon.)

DO NOT use detergents formulated for residential dishwashers.

DO NOT allow food soil to accumulate on the tank bottom.

DO NOT exceed chemical manufacturer's recommended concentrations for detergent, sanitizer, rinse aid or lime scale remover.

DO NOT use steel wool to clean ware or warewasher surface.

DO NOT allow foreign objects to enter the unit, especially metallic contaminants.

NOTE: Failure to follow use, care and maintenance instructions may void your Hobart warewasher warranty.

CLEANING

This machine must be cleaned at least once each working day. Use only products formulated to be safe on stainless steel.

1. Press OFF. The machine will drain. When the display is no longer lit, open the door and remove any debris from the bottom of the tank. Do not allow food soil to accumulate on the tank bottom.
2. Remove the lower rinse arm by unscrewing the thumb nut (Fig. 10). Remove the lower wash arm by pulling the arm off the shaft. Remove the upper rinse and wash arms in the same manner. Remove the coarse and fine strainers. (See Figs. 7 and 8). Thoroughly clean these items in a sink. Remove debris from wash/rinse arm nozzles.

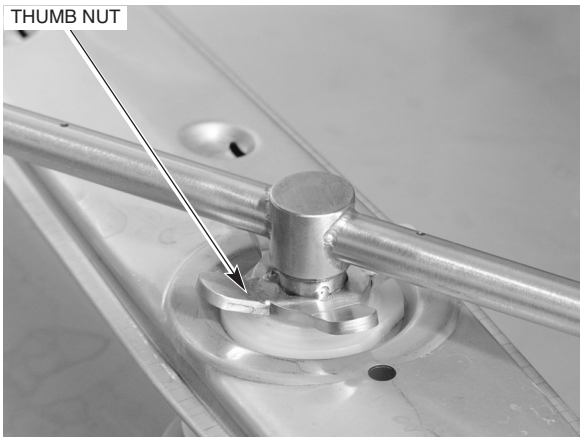

Fig. 10



Fig. 10B

3. With a damp cloth, wipe the interior of the machine. With a nonmetallic scouring pad, clean the rear water level probes (Fig. 11) and the front water level probe (Fig. 12) under the fine strainer. DO NOT use steel wool. Wipe the exterior of the machine. When cleaning the inside of the door, be sure to wipe the lip at the bottom of the door. Remove any remaining debris with a mild cleanser formulated for stainless steel and a soft cloth or brush.



Fig. 11



Fig. 12

4. Replace the coarse and fine strainers. Reinstall the lower wash arm by pushing it down on the shaft and then place the lower rinse arm on the shaft and securely tighten the thumb nut. Spin arms to make sure they spin freely. Repeat this procedure with the upper wash and rinse arms.

5. Use a soft, damp cloth or sponge and mild cleanser to clean the control keypad and display. DO NOT use abrasive or harsh cleaners or scouring pads.
6. Leave the door ajar overnight to allow the interior to air out and dry.

PRIMING CHEMICAL PUMPS

When a chemical becomes empty, the priming operation starts automatically the next time the machine is turned on or a wash cycle is started. This feature is only supported on machines with the chemical sense board installed and where CHEMICAL SENSING is enabled. Note that the initial prime time for all pumps (Detergent, Rinse Agent and Sanitizer) is 60 seconds during which time the chemical icon will flash. If the chemical is not sensed within 60 seconds, the chemical icon will remain lit and the control will beep for about 5 seconds. After the chemical is sensed, the indicator in the display turns off; and the pump continues to prime for 20 seconds to allow the chemicals to reach the machine. If all chemicals are empty, the sanitizer will prime first followed by detergent. Only one chemical pump will run at a time.

If chemicals are not sensed after three consecutive priming operations, the wrench is displayed along with the empty chemical icon and priming is cancelled. The next time a wash cycle is started, the control will flash the wrench and empty chemical icon as well as beep. This is to prevent the priming operation in case the chemical sensors have malfunctioned. Verify that the chemical bottles are not empty. If they are not empty, the chemical sensor or pumps have malfunctioned; contact your local Hobart Service Office.

The priming operation can be reset by either:

- Pressing the WASH key a second time while the wrench and empty chemical icon is flashing.
- By turning the dishwasher off, then back on.

NOTE: If the use of chemical pumps is not desired, refer to the Operator Programming Mode section.

MAINTENANCE

DELIMING

⚠ WARNING Deliming solution, rinse agents or any other kind of acid must not come in contact with bleach or rinse solution containing bleach used in chemical-sanitizing machines. Mixing may cause hazardous gas to form. This entire procedure must be followed step by step for safe and satisfactory results.

NOTICE Do not allow the deliming agent to remain in the machine longer than recommended by the deliming agent manufacturer.

DELIME THE DISHWASHER ON A REGULAR BASIS AS REQUIRED. The regularity will depend on mineral content of the supply water. Deliming should be done when you can see clear signs of lime deposits (a white, chalky substance) on the inside walls and on the wash arms. LXi models are equipped with an automatic delime cycle reminder. It is recommended that deliming be done when DELIME flashes.

If deliming is necessary, a deliming agent (such as Lime Away or LSR) should be used for best results.

After the preprogrammed number of cycles has expired, which is factory-set for 1500 cycles, the control will indicate the delime request by displaying DELIME. Machine operation will continue as usual. To remove the DELIME icon, you must either enter a delime cycle or reprogram the number of cycles to terminate the DELIME indication. (If the dishwasher needs to be reprogrammed, contact your local Hobart authorized service office.)

1. Remove rack from machine. Close door.
2. Press OFF to power down the dishwasher.
3. Press and hold WASH (DELIME) while pressing ON. The display will show DELIME during the fill cycle.
4. After the fill cycle, the control will prompt you to add delimer by flashing ADD and DELIME. Open the door and add deliming agent. (Carefully follow supplier's instructions.) The sump holds approximately 3 gallons of water.
5. After delimer has been added, close the door. Press the WASH (DELIME) key again to continue the cycle. The machine will enter the wash mode for 5 minutes, then will begin two rinse and drain operations. The DELIME symbol will flash in the display.

NOTE: DO NOT interrupt the cycle. Should the process be interrupted, restart delime procedure from the beginning.

6. After the deliming operation is completed, power to the control will be turned off.
7. Inspect the interior of the machine for lime deposits. If necessary, repeat steps 3 through 7.

LUBRICATION

The pump motor has permanently sealed bearings and requires no lubrication.

TROUBLESHOOTING

This section outlines various symptoms and possible causes that may be encountered in the event of abnormal machine operation. If symptoms persist after possible causes have been checked, service may be required.

Symptom	Possible Causes
No machine operation (no display).	1. Machine OFF - turn machine ON. 2. Blown fuse or circuit breaker off at power supply. 3. Cord not plugged in (corded models only)
No machine operation (with display).	1. Display: "dr" "oP" - open and close door. If problem persists, contact your local Hobart Service Office. 2. See "Machine won't fill or won't fill high enough."
Dishes not clean.	1. Strainers clogged causing inadequate water supply to pump - clean according to instructions. (See Cleaning.) 2. Obstruction in wash arm(s) or wash arms will not turn - clean 3. Wash or rinse arms will not turn - check that they spin. 4. Detergent dispenser may be clogged. 5. Soil quantity - scrape dishes before cycle. 6. Improper rack loading - see Preparation in this manual. 7. Low water - check water pressure. 8. Water temperature too low - note wash temperature on display during WASH; should be above 120°F for chemical-sanitizing machines and above 150°F for other machines. 9. Incoming water supply turned off.
Spotting of silverware, glasses or dishes.	1. Improperly loaded racks. 2. Water temperature too low. 3. Improper type or concentration of detergent - contact your local detergent representative. 4. Hard water - install a water softener; use a rinse agent. 5. Insufficient fill - check water pressure.
Chemicals not feeding.	1. Low on chemicals - check levels. 2. Air leak at feeder hose connections - check for snugness. 3. Tubes kinked - check for smooth bends.
Food soils remain in dishwasher.	Follow daily cleaning instructions. (See Cleaning.)

Symptom	Possible Causes
Unexpected results on dishes.	1. Etching - usually caused by any combination of high temperatures, soft water, soft glass or high alkaline washing solutions. 2. Tarnishing - avoid washing silver, silver plates and pewter in chemical-sanitizing machines. 3. Pitting - stainless steel may pit with lengthy contact of foods containing salt, fruit juices, vinegar, etc. Wash immediately. 4. Black or gray marks - may have been rubbed with aluminum. 5. Brown stains - may be due to high iron content in water supply. 6. Chipping - improper loading or ware is too delicate. 7. Fading of china patterns - usually due to high water temperature and strong detergent. Check that china is dishwasher compatible. 8. Wooden ware damage - avoid washing in dishwasher. 9. Rust on cast iron - seasoning is lost in dishwasher. Avoid dishwasher cleaning. 10. Plastic ware distortion - high temperatures. Check plastic ware's instructions.
Low-temperature readings.	1. Low water supply temperature - make sure it meets the recommended limits. 2. Rapid cycle use - if incoming water temperature is low and cycle use rate is high, the hot water supply may be insufficient to meet the demand. 3. Heavy ware load cools wash water - do not overload racks. 4. Booster heater or sump heater set low - contact your local Hobart Service Office.
Machine will not fill or will not fill high enough. (Display shows E0, E2, E3 or E4. Machine will not run).	1. Low water pressure - check for clogged hose strainer; ensure the site water pressure meets minimum flow pressures. 2. Make sure probes are clean. (See Cleaning.) 3. No water pressure - main water supply valves may not be working. 4. Anti-siphon valve - located in the lower left area of the chamber just above the water line. Drain the machine and insert toothpick or similar object into hole to verify ball (3⁄16" OD) is free to float. 5. Delime machine.

Symptom	Possible Causes
Machine fills too high or leaks from door. (Display shows CL/Pr.)	1. Machine not level - see LEVELING in this manual. 2. Fill solenoid valve leaking - turn the dishwasher OFF; if water continues to come in, contact your local Hobart Service Office. 3. Clean water level probes. (See Cleaning.)
Machine will not drain. (Display shows E5).	1. Drain pipes restricted - check dishwasher drain line for kinks; ensure proper drain rate is allowed from plumbing. 2. Turn machine OFF. Wait several seconds and then turn back ON. Repeat this procedure twice if necessary. If problem persists, contact your local Hobart Service Office.
Some water occasionally drips out of rinse arms (H dishwashers only).	This is normal due to expansion of water being heated in the booster tank.
Machine displays E6.	Contact your local Hobart Service Office.
Machine lights up wrench and flashes P1, P2 or P3.	Contact your local Hobart Service Office.
Machine lights up wrench and chemical icon.	Refer to Priming Chemical Pumps.

NOTES

NOTES