INSTRUCTIONS

LEGACY™ MIXER BOWL SCRAPER ATTACHMENT

HOBART
CORPORATION

701 S. RIDGE AVENUE
TROY, OHIO 45374-0001

937 332-3000

www.hobartcorp.com

FORM 34778 (Jan. 2003)

Installation, Operation, Use and Care of Mixer Bowl Scraper Attachment For Legacy™ Mixer

SAVE THESE INSTRUCTIONS

GENERAL

The mixer bowl scraper attachment continually scrapes the sides of the bowl as the agitator turns. Material around the side and bottom of the bowl is constantly reintroduced into the mixture. Manual scraping is not needed when using the bowl scraper. The bowl scraper is used when mixing batters or creaming. **The bowl scraper is not used when mixing dough products. The bowl scraper is used only with stainless steel bowls.**

INSTALLATION

UNPACKING

Immediately after unpacking, check for possible shipping damage. If any parts are found to be damaged, save the packaging material and contact the carrier within 15 days of delivery.

ASSEMBLY OF BOWL SCRAPER ONTO ARM (Figures 1 through 3)

1. Slide urethane scraper onto arm; use a little water as a lubricant to make the scraper slide on easier. Leading edge of scraper will turn clockwise as you look down into bowl (Fig. 1).
2. If necessary, tap the end of the urethane scraper on a flat surface to push scraper firmly onto the arm (Fig. 2). Make sure sleeve is positioned on arm as shown in Fig. 3.

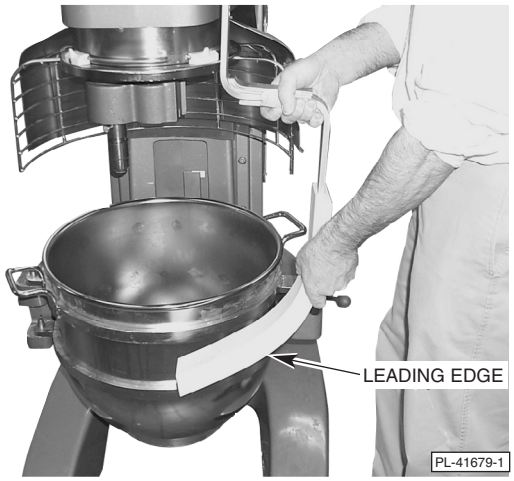

Fig. 1



Fig. 2

© HOBART CORPORATION, 2003

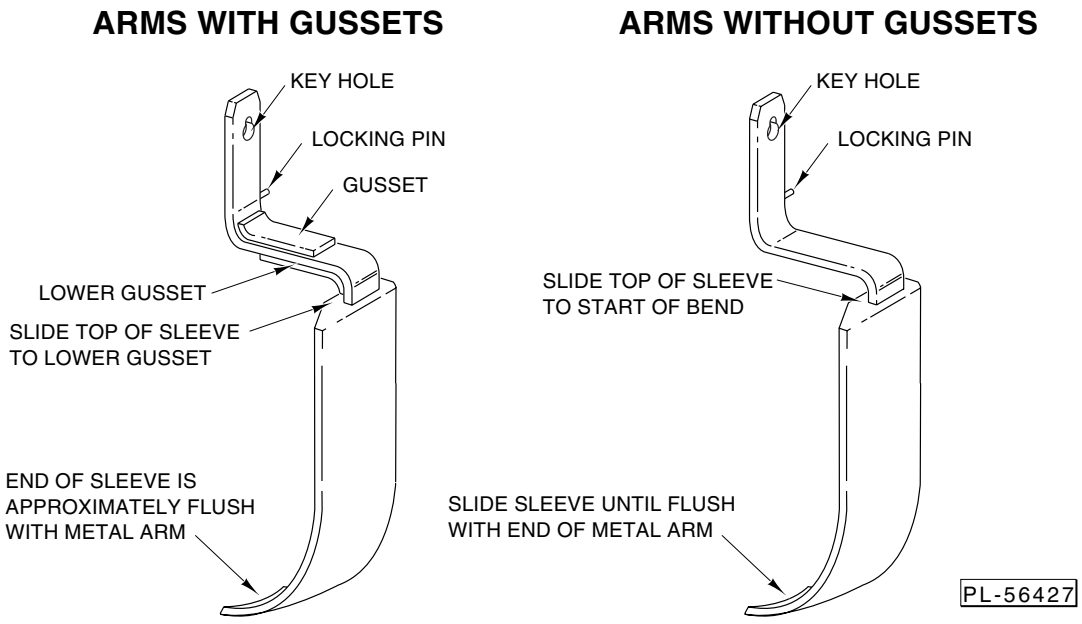

Fig. 3

NOTE: Always use proper size sleeve with scraper arms. Be careful not to mix sleeves and arms if you have multiple sizes of scrapers.

INSTALL BOWL SCRAPER LABEL ON MIXER HEAD

Prepare a clean dry place on the mixer head where the bowl scraper label can be seen by the operator. Peel off the backing paper and apply the label (Fig. 4).



Fig. 4

OPERATION

WARNING: MOVING BEATER AND SCRAPER IN BOWL. KEEP HANDS, CLOTHING AND UTENSILS OUT WHILE IN OPERATION.

Lubricate bowl surface with vegetable oil or shortening if needed, especially in the area above the product where the sleeve might rub against the bare surface of the bowl. The bowl scraper rotates clockwise as you look down into the bowl. Use speeds one and two only. Do not use Bowl Scraper with splash cover or extension ring.

Products which can be mixed while using the bowl scraper are: Mashed Potatoes, Waffle/Hot Cake Batter, Cake Batter, Sugar Cookies, Icing, Creaming Shortening/Sugar, Creaming Eggs/Sugar and Mayonnaise.

Bowl scraper must be used with wire whip or flat beater agitators only. Stainless steel bowls must be used.

TO INSTALL BOWL SCRAPER

1. Place bowl in the locked position and close the Wire Cage.
2. Run the mixer to bring the Planetary in position as shown in Fig. 5.
3. Lower the bowl.
4. Rotate Wire Cage to rear.
5. Disengage bowl lock and pivot bowl out (Fig. 6).

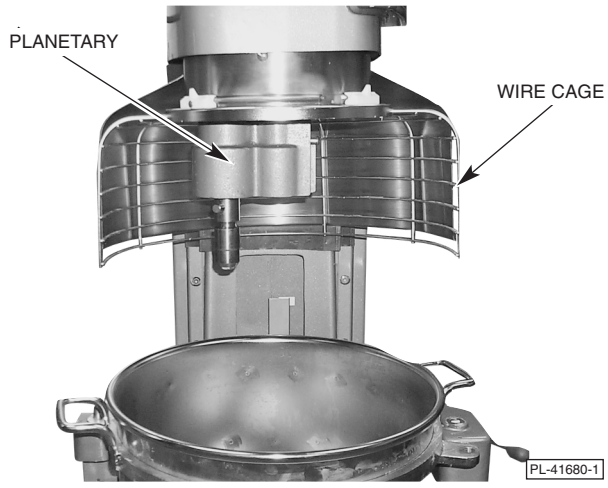

Fig. 5

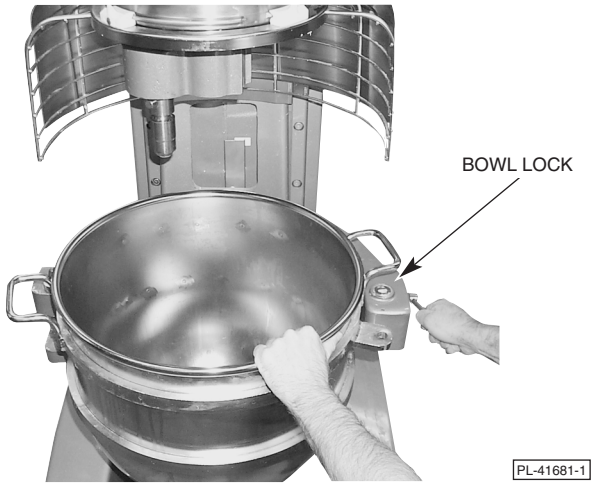

Fig. 6

6. Slightly tilt the bowl scraper arm and insert the keyhole slot over the round head screw on the Planetary (Fig. 7). Lower scraper arm into top of slot and rotate to a vertical position (Fig. 8).



Fig. 7



Fig. 8

7. Pivot bowl back to the locked position.
8. Return Wire Cage to front-center position.
9. Raise bowl to operating position. Run mixer normally.

NOTICE: Never raise a bowl of stiff product (i.e., cream cheese, shortening, unmashed potatoes) with the scraper arm in place. The scraper arm can be permanently bent and become damaged by rotating beaters (Fig. 9). Run the agitator at stir speed while the bowl is being raised; or, load the bowl after it is raised.

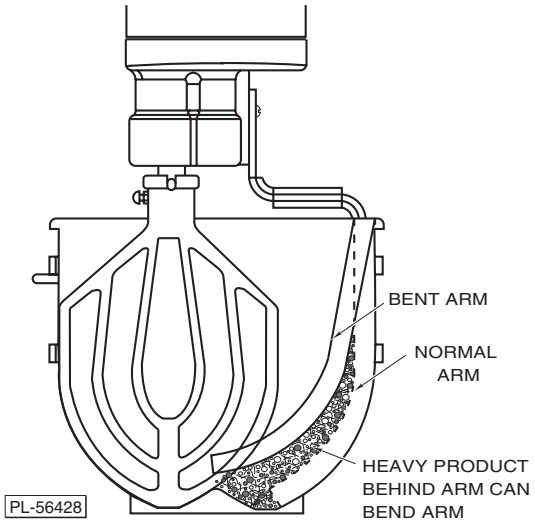

Fig. 9

TO REMOVE BOWL SCRAPER

1. Run the mixer to bring the Planetary in position as shown in Fig. 5.
2. Lower the bowl.
3. Open the Wire Cage.
4. Remove beater (if attached) by pulling the plunger as shown in Fig. 10.
5. Disengage bowl lock and pivot bowl out slightly (Fig. 6).
6. Tilt the scraper arm slightly, then lift it off the round head screw.

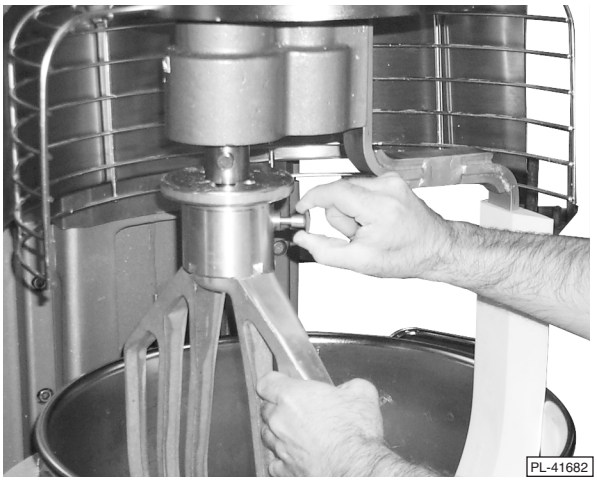

Fig. 10

CLEANING

- Remove the urethane sleeve from the arm; tapping the sleeve against a table will aid removal (Fig. 11).
- Clean both parts in a sink with warm water and detergent solution.
- Do not wash urethane sleeve in a dishwasher or use water above 110°F (43°C).
- Rinse with clear water and air dry.
- DO NOT use harsh chemicals (i.e., bleach) to clean the sleeve, as this will degrade the urethane.
- Slide sleeve onto arm so bevel is the leading edge; use a little water as a lubricant. Refer to Fig. 3 for proper sleeve position. Be sure top of arm is clean before reassembly onto Planetary.

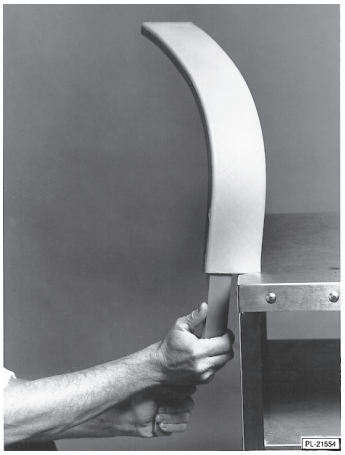

Fig. 11

MAINTENANCE

To maintain ease of installing and removing scraper arm, clean area around planetary where scraper arm mounts.

TROUBLESHOOTING

Symptom	Remedy
Scraper grabbing bowl.	Lubricate bowl surface with vegetable oil or shortening.
Bevel edge not leading.	Remove arm and reinstall urethane scraper.
Beater/Bowl clearance excessive.	Hobart Service can adjust the Beater/Bowl clearance so the scraper fits the side of the bowl.

SERVICE AND PART INFORMATION

Contact your local authorized Hobart Service agency.

NOTES