INSTALLATION

MODEL FRC

FastRack® SYSTEM

HOBART CORPORATION

701 S. RIDGE AVENUE
TROY, OHIO 45374-0001

937 332-3000

www.hobartcorp.com

FORM 11452 Rev. D (Mar. 2000)

FRC DISHWASHER

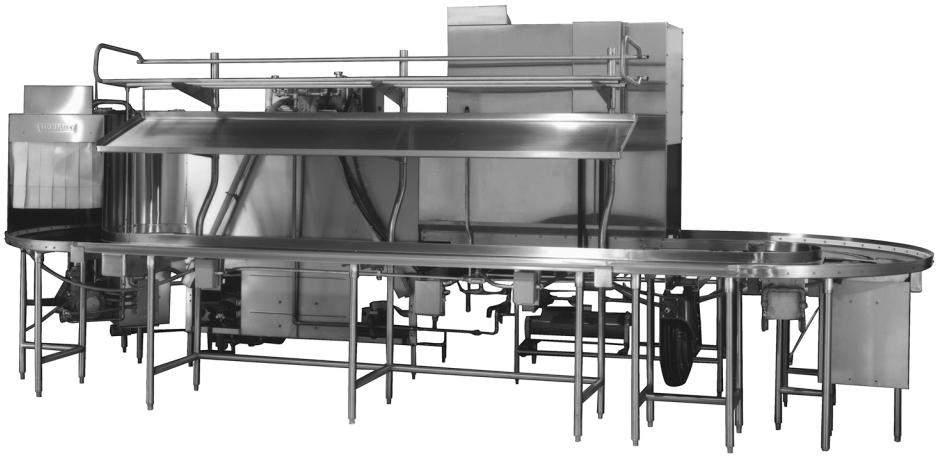

I. FIELD INSTALLATION

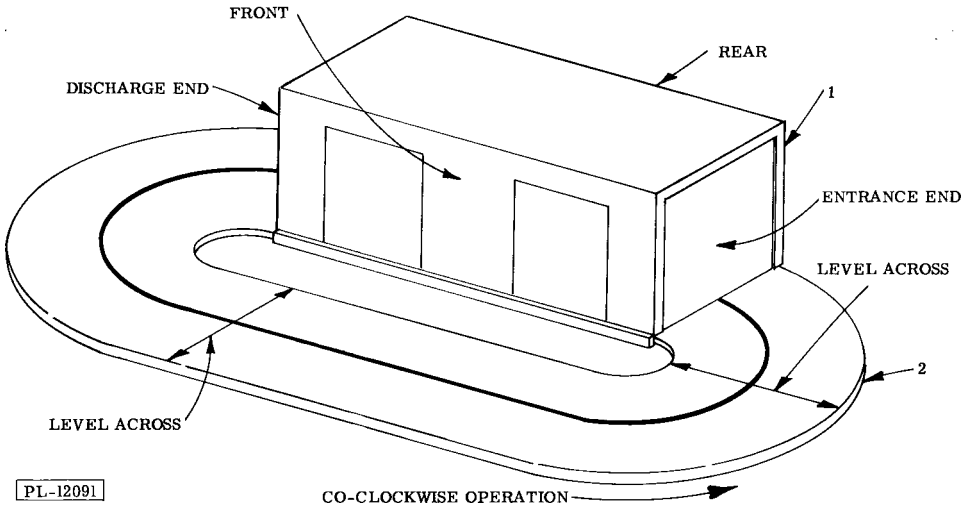

Fig. 1

A. GENERAL

The basic system consists of:

A.1 Standard C-Line A dishwasher (1, Fig. 1).

A.2 Tabling and conveyor mechanism (2, Fig. 1).

B. SETTING MACHINE & TABLES

B.1 This section is to establish a procedure for locating and setting the FRC assembly. It is important that these instructions be followed, and that a Hobart representative be on the assembly site.

B2. Setting Dishwashing Machine:

CAUTION: **Dishwashing machine must be level before installing the table sections.**

B.2.1 Adjust all dishwashing machine feet to the lowest position.

B.2.2 Level the dishwashing machine from the discharge end to the entrance end and from front to rear (see Fig. 1). Use a 2' carpenter's level and adjust each foot. Set the dishwasher at minimum height from floor and level it. Place level on tank lip for leveling front to rear and on rack tracks for leveling end to end. The minimum distance from the floor to the tank lip should be approximately 34".

B2.3 **NOTE**: On installations where multiple C-Line A dishwashers are connected in tandem, all dishwashers must be level.

B2.3.1 When installing multiple C-Line A Dishwashers, it will be necessary to seal the wash chamber connecting unit.

Apply 1/2" x 1/16" presstite sealer (Part # 545594) (2, Fig. 2) to dishwasher tank lip. Set tank connecting unit in place. Apply 1/8" diameter presstite sealer (Part # 508454 (5, Fig. 2) around head of Fin Bolt (6, Fig. 2) before assembling fastener through hole in tank connecting unit and tank lip.

Use gray vinyl foam tape (7, Fig. 2) to seal chamber connecting unit and dishwasher chamber. Fasten chamber connecting unit to dishwasher chamber with 1/4" – 20 x 5/8" lg. finished bolt (8, Fig. 2), washer (9, Fig. 2) and elastic stop nut (10, Fig. 2).

Fasten tank lip to tank connecting unit (1, Fig. 2) with 5/16" –18 x 7/8" lg. finished bolt (6, Fig. 2), washer (4, Fig. 2) and elastic stop nut (3, Fig. 2).

Assemble sides of chamber connecting unit to tank connecting unit with six 5/16" – 18 x 5/8" lg. truss head machine screws (11, Fig. 2), washers and elastic stop nuts.

After all parts are in correct location, tighten all fasteners.

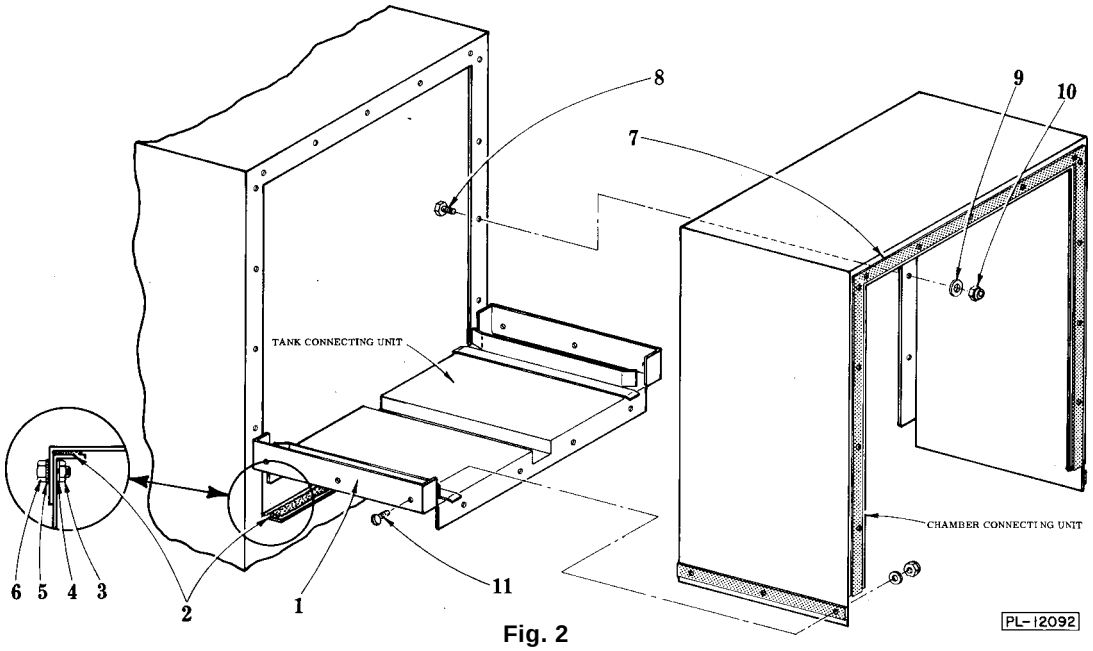

Fig. 2

B.3 Setting Tables:

B.3.1 Next, the tabling should be set in place starting at the entrance and discharge ends of the dishwasher (see Fig. 1). Additional extension legs (Part No. A-102396) are available at extra cost if required for unusually large oval installations (approx. 40' chain length or over), and triangular or L-shaped installations to allow necessary adjustments to be made for sloping floors.

B.3.2 Adjust the feet so the table height matches the dishwasher tank lip height as the table section(s) are installed. The table section(s) must be level with the discharge and entrance ends of the dishwasher and must be level from front to rear (across the table section). Use a 2' carpenter's level across the table edges for front to back leveling and along the chain channel areas for leveling along the length of the table. The entire tabling installation now should be level with the dishwasher.

B.3.3 Fill the heads of all allen head set screws used to secure the legs to the tables with Silastic sealant (# 500558) supplied with the field joint kit.

C. FIELD JOINT INSTALLATIONS

Make sure the following instructions are fully understood BEFORE starting the actual operation of permanently making the field joints in the conveyor tables. **NOTE**: All table sections must be set in place before sealing field joints. Only final adjustments are to be made after sealing the joints.

D. KIT PART LIST (FIELD JOINT)

Part No.	Part Name	Amt.
522330	Silastic* Sealant Adhesive	1 (10 oz.) Tube
M-85364	Brush (acid type)	1 (3 oz.) Can

* IMPORTANT — Use Silastic ONLY. Do NOT use another sealant as a substitute.

Dow Corning Silastic RTV732 (Part # 522330 supplied in the above kit is a room temperature vulcanizing, silicone rubber adhesive sealant. It withstands flexing and stressing and will maintain adhesion in temperatures from minus 100°F to plus 500°F. This RTV732 is approved for use by both the NSF and U. S. FDA (21CFR121.2562).

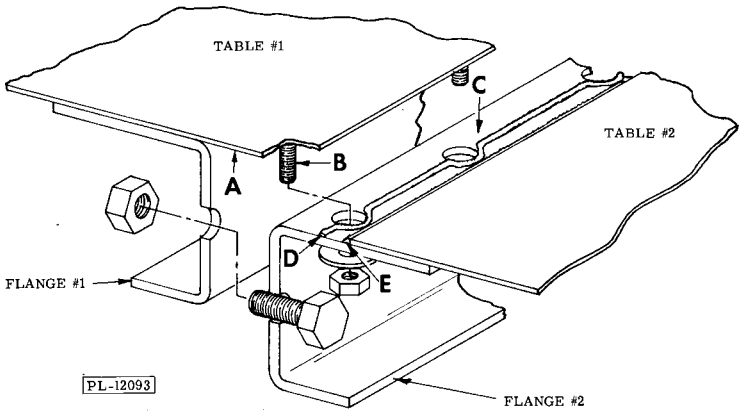

Fig. 3

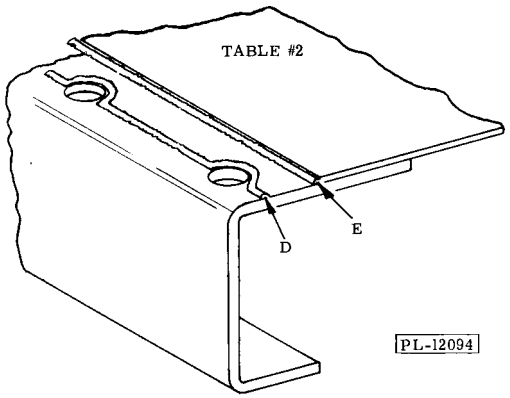

Fig. 4

E. TABLE FIELD JOINTS

Sequence and timing are important to assure permanent water-tight joints. It is also important that the following procedure be followed carefully.

E.1 Mating joints in the tables are designed so that the two ends of the table surfaces come into contact before the surfaces of the underside flange faces. This assures a minimum opening (crack) at this junction.

E.2 Obviously the area of the table surface junction is the point which will require complete sealing, so that no water and/or soil leakage can cause contamination.

E.3 When the assembled table surface (A, Fig. 3) with its threaded studs (B, Fig. 3) is set over and onto flange surface (C, Fig. 3) then the ends of the two table surfaces (A & C, Fig. 3) are brought together. Before this assembly, prepare the junction for sealing by the following method:

E.3.1 Thoroughly clean mating surfaces (the underside of the table surface (A, Fig. 3) with the studs (B, Fig. 3) and the top flange surface (C, Fig. 3) with a clean cloth.

E.3.2 Use the small acid brush (from kit) and smoothly apply sealant primer (from kit) to both the cleaned mating surfaces (A & C, Fig. 3) completely across the width of the tables, then up the table rim and rim flange.

E.3.3 Allow sealant primer to dry approximately 30 minutes.

E.3.4 Cut off the Silastic tube nozzle at the 1/8" mark. **NOTE**: Silastic will air harden. Assembly at each section should be completed within 20 minutes after Silastic is applied.

E.3.5 Apply two continuous beads (D & E, Figs. 3 & 4) of Silastic 3/32" thick on flange surface (C, Fig.3): One bead (E, Figs. 3 & 4) along the table surface junction and the second bead (D, Figs. 3 & 4) on the flanged surface and around clearance holes as shown.

E. 3.6 Now the mating table #1 (Fig. 3) with the studs (B, Fig. 3) should be set in place. All nuts and bolts should be assembled and tightened. The Silastic which is forced upward through the crack at the table junction should now be wiped off. Any smeared Silastic should not be allowed to cure as it then becomes very difficult to remove this material from the table surface.

NOTE: Do not over-tighten the nuts on studs (B, Fig. 3) as you may pull the stud from the table top.

F. EXTENDED HOODS

Should it be necessary to assemble vent hoods, exhaust hoods or dryer sections to the parent (dishwashing) machine, use the special gray vinyl foam tape (1, Fig. 5) (Hobart Part # 506148). DO NOT use Silastic (Part # 522330) for this application. When installing vent hoods, it will be necessary to cut an elongated hole (2, Fig. 5) in the vinyl tape to prevent obstructing the drain hole. The other screw holes (3, Fig. 5) can be punched when unit is being assembled.

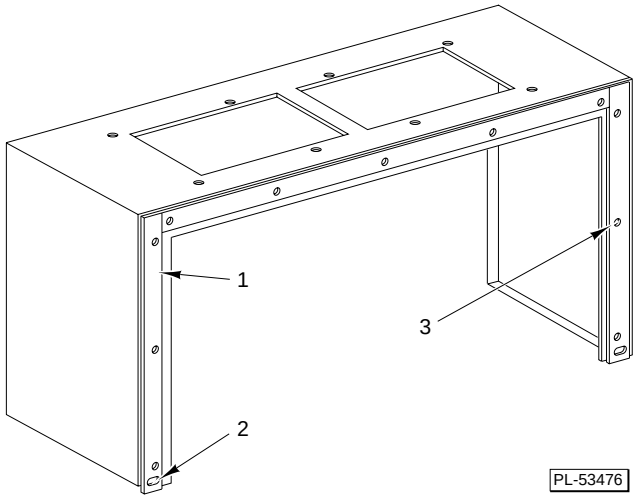

Fig. 5

G. ELECTRICAL AND PLUMBING

All internal electrical and plumbing connections can now be completed. Electrical connections must be made according to the wiring diagram furnished with each system. All wires are labeled and all terminal blocks are marked. All connections must be made to meet UL Specifications. All plumbing connections must be made so they do not leak. All electrical and plumbing services to machine must be made to local plumbing codes. Water must be proper hardness. Recommended range is 4 – 6 grains/gallon. Refer to the Rough-In Drawing furnished with each job for proper connections.

H. SPEED REDUCER LUBRICATION

CAUTION: Be sure to check the oil level in the chain drive unit speed reducer before finishing the installation.

II. ADJUSTMENTS

A. CONVEYOR CHAIN — FRC

The conveyor chain is furnished to the correct length for the initial installation. The FRC dishwasher is shipped from the factory with the drive loading screw extended to its full length. **NOTE**: Before proceeding to install unit, check sprocket rotation. The motor must rotate drive sprocket in the correct direction; clockwise for clockwise operation and counterclockwise for counterclockwise operation. Interchanging any two motor supply leads at the motor controller will reverse the rotation direction.

Use the following procedure to adjust drive mechanism and assemble chain:

A.1 Withdraw loading screw as far as possible (1, Fig. 6).

A.2 Remove take-up spring (3, Fig. 6). Spring support (2, Fig. 6) may become loose.

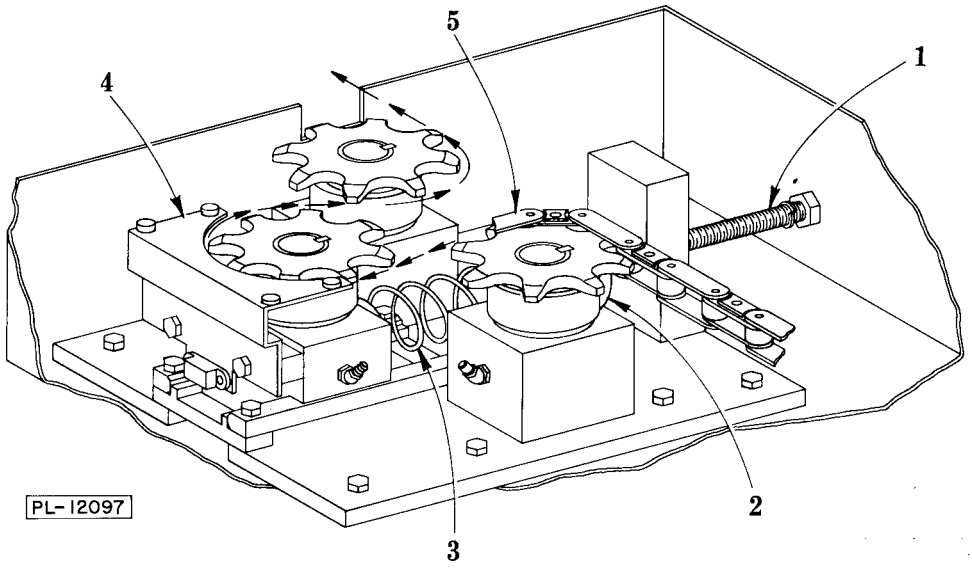

Fig. 6

A.3 Before checking drive rotation and installing chain, the take-up support should be at least 1/2" from back of sump wall. When magnet (5, Fig. 8) on take-up support moves close to sump wall, it activates a safety switch which automatically stops the conveyor drive.

NOTE: The drive system is designed to automatically adjust for wear. After the dishwasher has been in use over a period of time, the chain may stretch permitting the magnet (5, Fig. 8) to come close to the sump wall. The safety switch will then automatically shut off the drive mechanism. To prevent this from happening, monthly check clearance between magnet and sump wall. When clearance becomes less than 1/2", contact your Hobart service technician for adjustment.

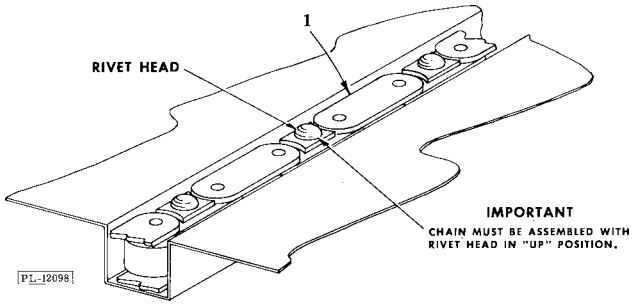

Fig. 7

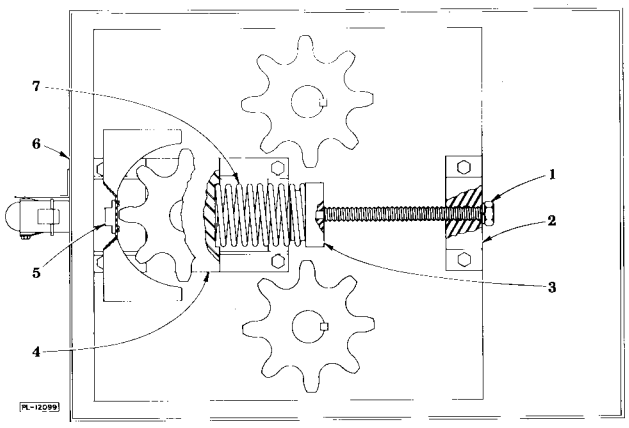

Fig. 8

A.4 Position chain in channel with rivet head up (Fig. 7). Assemble chain around drive sprocket and feed through and around the other sprockets (5, Fig. 6). Make sure chain does not come in contact with take-up cover (4, Fig. 6).

A.5 A connector link is furnished for connecting the chain. Assemble the connector link through the chain ends with the two pins up. Do NOT work directly on the table section. Place a steel block on the table to work on the chain. Using a center punch in the recess of each pin, peen slightly to tighten the pins.

A.6 Replace take-up spring (3, Fig. 6). Spring may have to be slightly compressed in reinstallation operation.

A.7 Tighten take-up screw (1, Fig. 8) its full thread length and lock screw against take-up screw support (2, Fig. 8) (approx. 40 to 50 pound-feet). When tightening take-up screw, observe loading spring (7, Fig. 8) and spring support (3 & 4, Fig. 8) to make sure that the spring is properly seated.

A.8 With the proper chain length, the magnet (5, Fig. 8) should not be closer than 1" from the sump wall (6, Fig. 8). Make sure chain (1, Fig. 7) is correctly located in channel before continuing next step.

A.9 Close sump cover and start machine. Observe chain travel. Make sure drive is working correctly and chain is moving smoothly through the channel.

B. LUBRICATION

B.1 Chevron SRI #2 grease is to be used as the lubricant for the chain tension hub assemblies. It is important that this lubricant be used. DO NOT substitute or mix this lubricant with another type. Monthly, make sure each of the three cavities are filled by forcing grease into the fittings (Fig. 6) until the lubricant starts to ooze from under the skirt seal. Wipe off excess grease. Wipe clean.

C. DRIVE CLUTCH — FRC

The overload clutch and coupling assembly, (Fig. 9) allows the drive shaft for the conveyor chain to slip when there is an overload on the conveyor chain. The assembly consists of two lining discs (9 & 10, Fig. 9) which are clamped against the flat faces of the drive flange and pin assembly (6 & 7, Fig. 9). Drive flange and pin assembly rotation is transmitted to the chain sprocket by the upper flange (5, Fig. 9) and drive pin engagement.

C.1 Loosen the set screw (3, Fig. 9) on the clutch nut (1, Fig. 9), then loosen the three hex head screws (2, Fig. 9) in the clutch nut (1, Fig. 9).

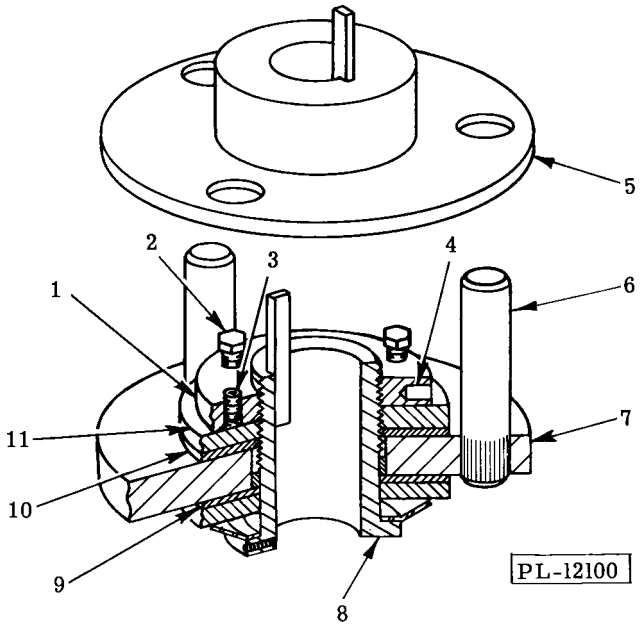

Fig. 9

C.2 Turn the clutch nut (1, Fig. 9 on the threaded clutch shaft sleeve (8, Fig. 9) by inserting a rod or pin in one of the two torque adjustment holes (4, Fig. 9). Tighten the clutch nut but permit the clutch to slip. Continue to allow the clutch to slip for a total of three minutes under load.

C.3 The final setting of the clutch requires that after a maximum of 5 minutes cooling time, all components be cool to the touch. Loosen the clutch nut with rod and retighten finger tight. DO NOT use rod to retighten. Place a felt pen mark on the finger tight clutch nut and plate (1 & 11, Fig. 9) next to drive pin (6, Fig. 9) and proceed as follows:

C.3.1 Loosen clutch nut 1/2 turn.

C.3.2 Starting at one screw location, tighten the three hex head screws (2, Fig. 9) 1/2 turn maximum in sequence until each screw is seated on the clutch nut to prevent misalignment between the drive flange and pin assembly (6 & 7, Fig. 9) and hub flange assembly (5, Fig. 9).

C.3.3 Lock clutch nut by tightening the set screw (3, Fig. 9).

C.4 Test setting, with the conveyor chain fully loaded. Start the drive motor. The clutch should drive the fully loaded chain without slippage. **NOTE**: If the clutch should slip, repeat C.1, C.2, C.3 and advance to tighten the clutch nut 1/3 turn and repeat test. Continue to advance clutch nut setting 1/3 turn and test until the clutch does not slip. Take care not to over-tighten clutch nut and to make sure that setting is completed on a cool dry clutch assembly.

The electric motor drives through the overload clutch and coupling assembly to move the conveyor chain smoothly under normal operating conditions. Noise and vibration indicate drive alignment is necessary.

SERVICE

Contact your local Hobart-authorized service office for any repairs or adjustments needed on this equipment.